Google

This is a digital copy of a book that was preserved for generations on library shelves before it was carefully scanned by Google as part of a project to make the world's books discoverable online.

It has survived long enough for the copyright to expire and the book to enter the public domain. A public domain book is one that was never subject to copyright or whose legal copyright term has expired. Whether a book is in the public domain may vary country to country. Public domain books are our gateways to the past, representing a wealth of history, culture and knowledge that's often difficult to discover.

Marks, notations and other marginalia present in the original volume will appear in this file - a reminder of this book's long journey from the publisher to a library and finally to you.

Usage guidelines

Google is proud to partner with libraries to digitize public domain materials and make them widely accessible. Public domain books belong to the public and we are merely their custodians. Nevertheless, this work is expensive, so in order to keep providing this resource, we have taken steps to prevent abuse by commercial parties, including placing technical restrictions on automated querying.

We also ask that you:

+ *Make non-commercial use of the files* We designed Google Book Search for use by individuals, and we request that you use these files for personal, non-commercial purposes.

+ *Refrain from automated querying* Do not send automated queries of any sort to Google's system: If you are conducting research on machine translation, optical character recognition or other areas where access to a large amount of text is helpful, please contact us. We encourage the use of public domain materials for these purposes and may be able to help.

+ *Maintain attribution* The Google "watermark" you see on each file is essential for informing people about this project and helping them find additional materials through Google Book Search. Please do not remove it.

+ *Keep it legal* Whatever your use, remember that you are responsible for ensuring that what you are doing is legal. Do not assume that just because we believe a book is in the public domain for users in the United States, that the work is also in the public domain for users in other countries. Whether a book is still in copyright varies from country to country, and we can't offer guidance on whether any specific use of any specific book is allowed. Please do not assume that a book's appearance in Google Book Search means it can be used in any manner anywhere in the world. Copyright infringement liability can be quite severe.

About Google Book Search

Google's mission is to organize the world's information and to make it universally accessible and useful. Google Book Search helps readers discover the world's books while helping authors and publishers reach new audiences. You can search through the full text of this book on the web at http://books.google.com/

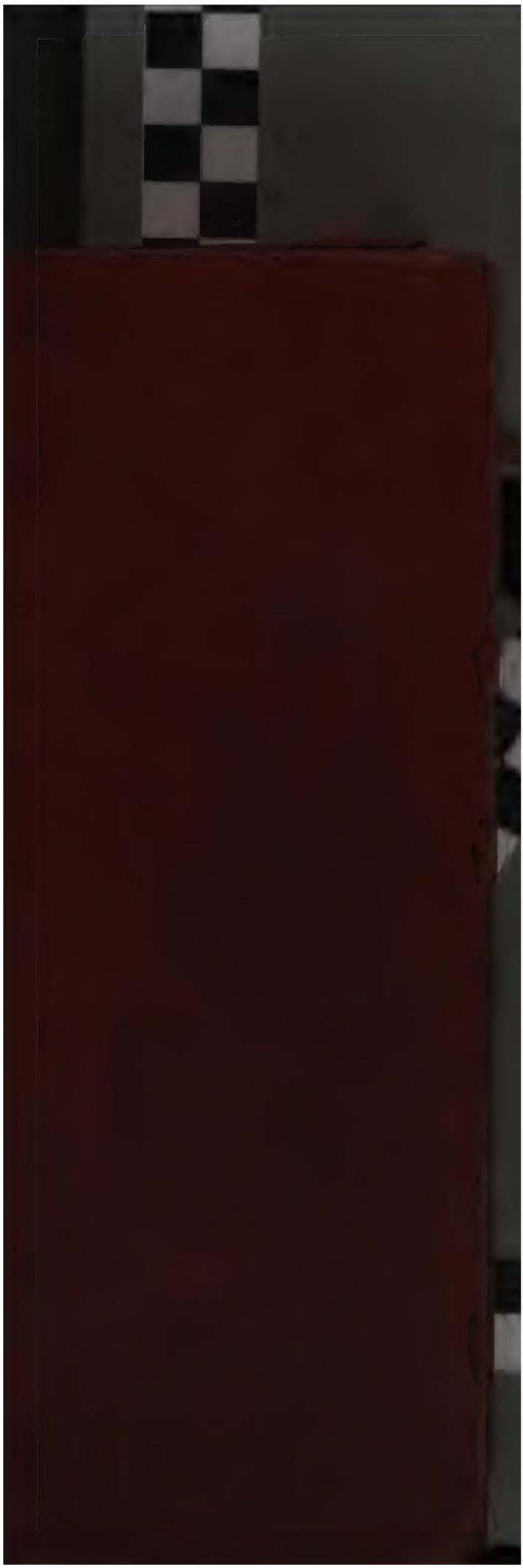

SHOP AND FOUNDRY PRACTICE

PREPARED FOR STUDENTS OF

THE INTERNATIONAL CORRESPONDENCE SCHOOLS

SCRANTON, PA.

Volume II

WORKING CHILLED IRON

PLANER, SHAPER, AND SLOTTER WORK

DRILLING AND BORING

MILLING-MACHINE WORK

GEAR-CUTTING

WITH PRACTICAL QUESTIONS AND EXAMPLES

Second Edition

SCRANTON

THE COLLIERY ENGINEER CO.

1901

2846

THE NEW YORK
PUBLIC LIBRARY
686266
ASTOR, LENOX AND
TILDEN FOUNDATIONS
R 1915 L

Copyright, 1901, by THE COLLIERY ENGINEER COMPANY.

Entered at Stationers' Hall, London.

All rights reserved.

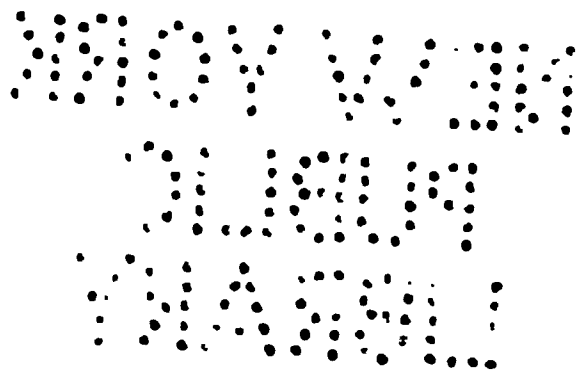

b

BURR PRINTING HOUSE,
FRANKFORT AND JACOB STREETS,
NEW YORK.

CONTENTS.

	Section.	*Page.*
Working Chilled Iron.		
Turning Parallel Rolls	7	1
Turning Rolls With Concentric Grooves	7	9
Grinding Chilled Rolls	7	17
Corrugating Rolls	7	20
Planing Chilled-Iron Dies	7	23
Planer, Shaper, and Slotter Work.		
Work of the Planer	8	1
The Planing Machine	8	1
Fastening Work to the Platen	8	7
Plane Surfacing	8	33
Feed-Motion	8	33
Planer Tools	8	35
Roughing and Finishing Cuts	8	36
Side Cuts or Down Cuts	8	37
Cutting Bevels	8	40
Various Shapes of Planer Tools	8	41
Making Undercuts	8	46
Cutting Speed	9	1
Accuracy of Planer Work	9	4
Special Planer Jobs	9	8
Work of the Shaper	9	12
Column Shaper	9	13
Crank Shaper	9	14
Geared Shaper	9	16

PLANER, SHAPER, AND SLOTTER WORK—*Continued.*

	Section.	*Page.*
The Traveling-Head Shaper	9	17
Cutting Speeds	9	19
Shaper Tools	9	20
Holding the Work	9	20
Spring of Machine and Work	9	25
The Draw-cut Shaper	9	25
Open-Side Plate Planer	9	27
The Special Shaper	9	30
The Slotting Machine	9	32
Holding the Work	9	35
Slotter Tools	9	37
Examples of Slotter Work	9	40
Keyway Cutters	9	43

DRILLING AND BORING.

Drilling	10	1
Development From the Lathe	10	2
Essential Parts of Drilling Machines	10	3
Principal Functions of Drilling Machines	10	4
Forms of Tools and Their Uses	10	6
Drilling Tools	10	6
Machine-Shop Drills	10	9
Annular Cutters	10	16
Drill Shanks	10	17
Lubrication of Drills	10	18
Reamers	10	20
Countersink	10	28
Counterbore	10	30
Spot Facing	10	33
Center Drills	10	34
Taps	10	34
Devices for Holding Tools	10	35
Securing Work on the Table of the Simple Drilling Machine	10	42
Types of Drilling Machines and Their Uses	11	1

DRILLING AND BORING—*Continued.*	*Section.*	*Page.*
Boring Machines	11	23
Horizontal Drilling and Boring Machine	11	29
Simple Type of Horizontal Drilling and Boring Machine	11	34
Post Drill	11	35
Horizontal Floor Mills	11	36
Milling Operations and Boring Mills	11	40
Cylinder Boring	11	40
Boring Spherical Bearings	11	44
Drilling-Machine Operations	12	1
Lubricating	12	7
Drill Grinding	12	8
Drilling and Boring Jigs and Fixtures	12	11
Miscellaneous Tools and Fixtures	12	24
Tables	12	29
Morse Taper Shank	12	30
Morse Tapers	12	31
The Speed and Feed of Drills	12	32
Cutting Speeds	12	33
Tap Drills	12	34
Twist Drills for Pipe Taps	12	35
MILLING-MACHINE WORK.		
Definitions	13	1
Construction of Milling Machine	13	4
Advantages of Milling Machines	13	9
Milling Cutters	13	10
Classification of Cutters	13	10
Construction of Cutters	13	11
Face Milling Cutters	13	11
Side Milling Cutters	13	18
Angular Milling Cutters	13	23
End Milling Cutters	13	25
Form Milling Cutters	13	26
Care of Milling Cutters	13	30
Holding Cutters	13	31
Preparation of Stock	13	39

MILLING-MACHINE WORK—*Continued.*	*Section.*	*Page.*
Cutting Speeds	13	40
Feeds	13	42
Tables of Feeds and Speeds	13	45
Lubrication	14	1
Selection of Cutter	14	6
Limitations and Errors	14	10
Use of Milling Machines	14	12
Holding Work	14	12
Simple Indexing	15	21
Compound Indexing	15	27
Spiral Work	15	32
Calculating the Change Gears	15	39
Cutting Helixes and Spirals	15	45
Table Showing Offset of Double Angle Cutters	15	49
The Natural Functions	15	50
Special Milling Attachments	16	1
Taking the Cut	16	10
Setting the Machine	16	24
Special Uses of the Milling Machine	16	35
Comparison of Milling Machine	16	39
GEAR-CUTTING.		
Gearing	17	1
Teeth of Spur Gears	17	1
Pitch and Proportions of Teeth	17	5
Rules for Spur-Gear Calculations	17	9
Laying Out Gear-Teeth	17	16
Systems of Gearing	17	16
Involute System	17	17
Grant's Involute Odontograph	17	20
Cycloidal System	17	24
Bevel Gears	17	29
Worm-Wheels and Worms	17	37
Kinds of Worm-Wheels	17	37
Designing Worm-Wheels	17	39
Designing the Worm	17	41

GEAR-CUTTING—*Continued.*

	Section.	*Page.*
Systems and Processes	17	45
Methods and Processes	17	46
Duplication System	17	49
Formed-Cutter Process	17	49
Templet-Planing Process	17	64
Generation System	17	66
Conjugate-Tooth Method	17	66

QUESTIONS AND EXAMPLES.

	Section.
Working Chilled Iron	7
Planer, Shaper, and Slotter Work, Parts 1 and 2	8–9
Drilling and Boring, Parts 1 to 3	10–12
Milling-Machine Work, Parts 1 to 4	13–16
Gear-Cutting, Parts 1 and 2	17

ANSWERS TO QUESTIONS AND EXAMPLES.

Planer, Shaper, and Slotter Work, Parts 1 and 2 (numerical calculations)	8–9
Drilling and Boring, Part 2 (numerical calculations)	11
Milling-Machine Work, Parts 1, 3, and 4 (numerical calculations)	13, 15, 16
Gear-Cutting, Parts 1 and 2 (numerical calculations)	17

TABLE OF NATURAL FUNCTIONS.

Pages 1 to 18 at end of volume.

WORKING CHILLED IRON.

TURNING CHILLED ROLLS.

PARALLEL ROLLS.

1. General Consideration.—In working chilled iron, good results are only possible from good castings; it is necessary, therefore, to see that the castings are free from cracks, blowholes, and dirt, and that the chill is deep enough so that the metal turned off will be of even hardness. In turning any chilled-iron rolls it is necessary to employ special lathes, and a few general rules must be observed in order that the work may be successful: First, the cutting speed must be so slow that the tool will hold its edge until it has done a reasonable amount of work; second, the tools and machine must be of very rigid construction and have a large amount of power, as the working of chilled iron produces severe strains on the machine; third, the tool steel employed must be a high-carbon steel tempered as hard as fire and salt water can make it; fourth, the operator must be patient and be content to turn off fine chips that very much resemble gray hair.

2. Lathes for Turning Parallel Rolls.—Rolls for flouring mills, calendering rolls for paper mills, and rolls for similar purposes, in which a broad flat surface is required, are frequently turned in a special type of lathe, the roll being cast as a hollow cylinder chilled on the outside. This

Copyright, 1901, by THE COLLIERY ENGINEER COMPANY.
Entered at Stationers' Hall, London.
All rights reserved.

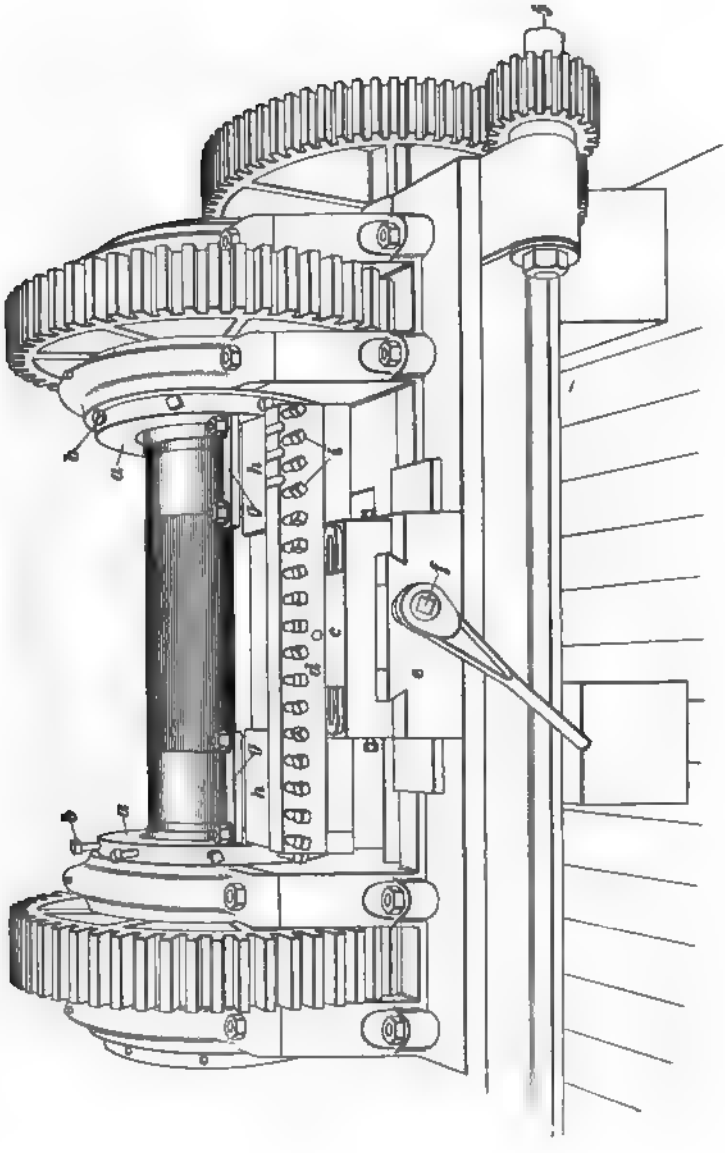

FIG. 1.

cylinder is turned in the lathe and the ends cut off, after which it is bored and fitted on a center carrying the necessary shaft and journals. Then, in the case of flouring-mill and calender rolls, it is ground to a perfect finish while running on its own bearings. Fig. 1 illustrates a common type of roli-turning lathe with the roll in place. In this style, both spindles are made hollow and the roll is introduced through the spindles and held by setscrews *b* passing through the collars *a*. In the style of lathe shown, both spindles are fitted with gears, and the roll is driven from both ends, thus relieving the strain on the lathe.

It will be noticed that this style of lathe is not provided with a carriage having a feed parallel to the length of the lathe, but simply with a broad tool post *d* fitted upon a cross-slide *c* that can be fed along the ways *e* by means of the feed-screw *f*. A set of gearing designed to give the proper speed reduction is placed on the end of the lathe at *j*.

3. Lathes driven from one end only are also made for this work; in this case, the tailstock end of the lathe is made with a hollow spindle through which the roll can be introduced. Some classes of rolls have narrow necks cast on them, and in this case the rolls are held during turning in bearings fitting on the necks in the same manner that the rolling-mill rolls are turned. This will be taken up in connection with the description of the turning of rolling-mill rolls.

4. Holding and Driving the Work.—Ordinarily, in turning 10- or 12-inch rolls that are to be bored and mounted subsequently, the roll is held by means of eight setscrews at each end, these setscrews also acting as drivers. Fig. 2 illustrates the general method of driving. In Fig. 1 can be seen the collar *a* through which the setscrews *b* are passed to hold the work. The same letters have been used for referring to these parts in Fig. 2. The roll *r* is centered and held by means of the setscrews *b*. This method of adjusting and driving the roll enables the workman to center the chilled part very carefully, so that the amount of turning

required will be as little as possible. There is generally about $\frac{1}{8}$ to $\frac{3}{16}$ inch of stock to be turned off from chilled

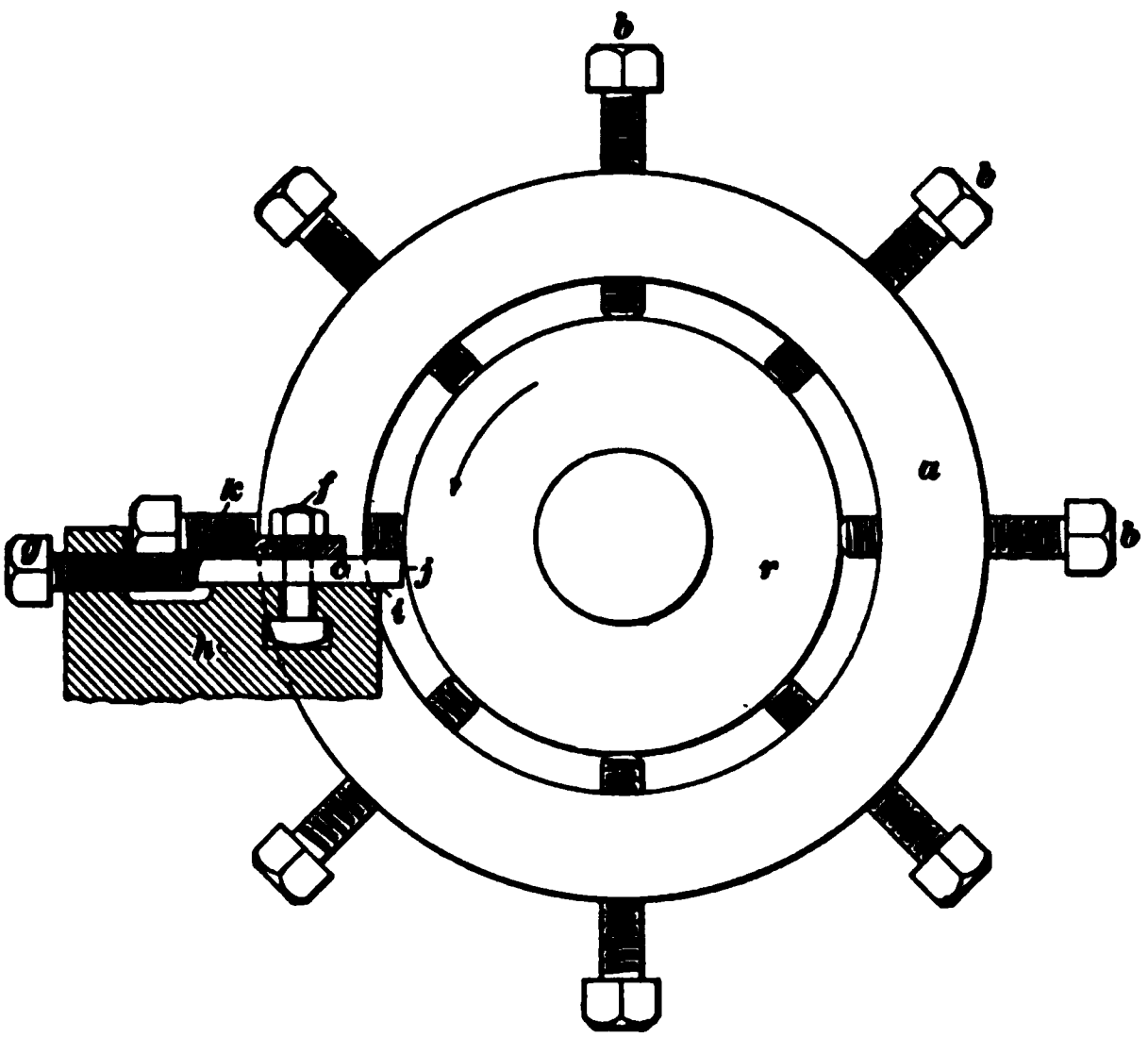

FIG. 2.

rolls, and as the turning process is very slow it is important that the centering be done accurately and carefully.

5. Turning Tools. — The tools commonly employed for turning parallel rolls are flat broad-nosed or wide-faced tools. It is probable that $\frac{1}{2}'' \times 5'' \times 5''$ is about an average size for straight work. There are on the market several brands of steel made especially for turning rolls. In turning parallel rolls it is common to operate two tools at a time, thus turning 10 inches of the face of the roll. At first thought it might seem best to use one tool 10 inches wide, but it is difficult to harden so wide a tool without its cracking; narrow tools are far less liable to break, and on the whole there is greater economy of steel and less difficulty experienced in adjusting tools when the two 5-inch tools are employed in place of one 10-inch. All tools for turning chilled iron differ radically from those employed on softer

metals, and all the turning is of the nature of scraping, the tools being given but little, if any, clearance. Tools for turning chilled iron are never fed into the work and then traversed along the machine, as is done with softer metals, but are fed straight up to their cut, whether turning a parallel face of a roll or the bottom or the side of a groove.

6. Grinding Turning Tools.—In order to insure a perfectly straight edge on the tool, it should be ground on a grinding machine provided with a carriage or special tool holder. The tool is hardened as hard as fire and salt water can make it and then traversed across the face of an emery wheel to make the face *a b* of the tool concave, as shown in Fig. 3. This leaves two sharp corners *a* and *b*. The tool is first set to use one corner; when this becomes

FIG. 3.

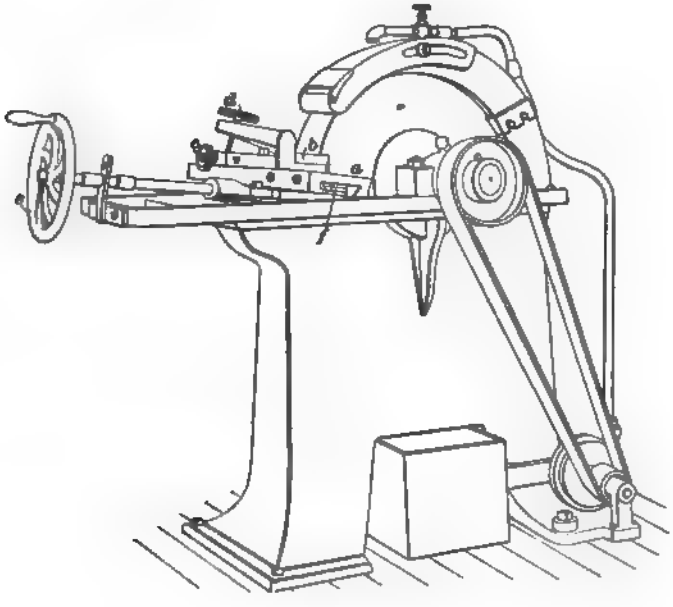

FIG. 4.

dull the tool is turned over and the other corner utilized. Fig. 4 illustrates a wet-grinding emery wheel fitted with a slide *a* upon which the tool can be clamped at *b* and fed back and forth across the face of the emery wheel, the different adjustments being obtained by means of hand wheels *c* and *d*. The carriage is traversed across the face of the emery wheel by means of the hand wheel *e*, which operates a pinion engaging with the rack *f* on the bottom of the carriage *a*. By means of such a device as this the tools can be accurately and quickly ground.

7. Cutting-Off Tools.—Special cutting-off tools are employed for cutting off the ends of the chilled iron rolls after the bodies have been turned to size. Fig. 5 illustrates one of these tools, which is forged from $\frac{3}{4}'' \times 1\frac{1}{4}''$ steel and tempered by dipping into salt water. The edge of this tool is about $\frac{5}{16}$ inch wide and the corners *a* and *b* are cut off at

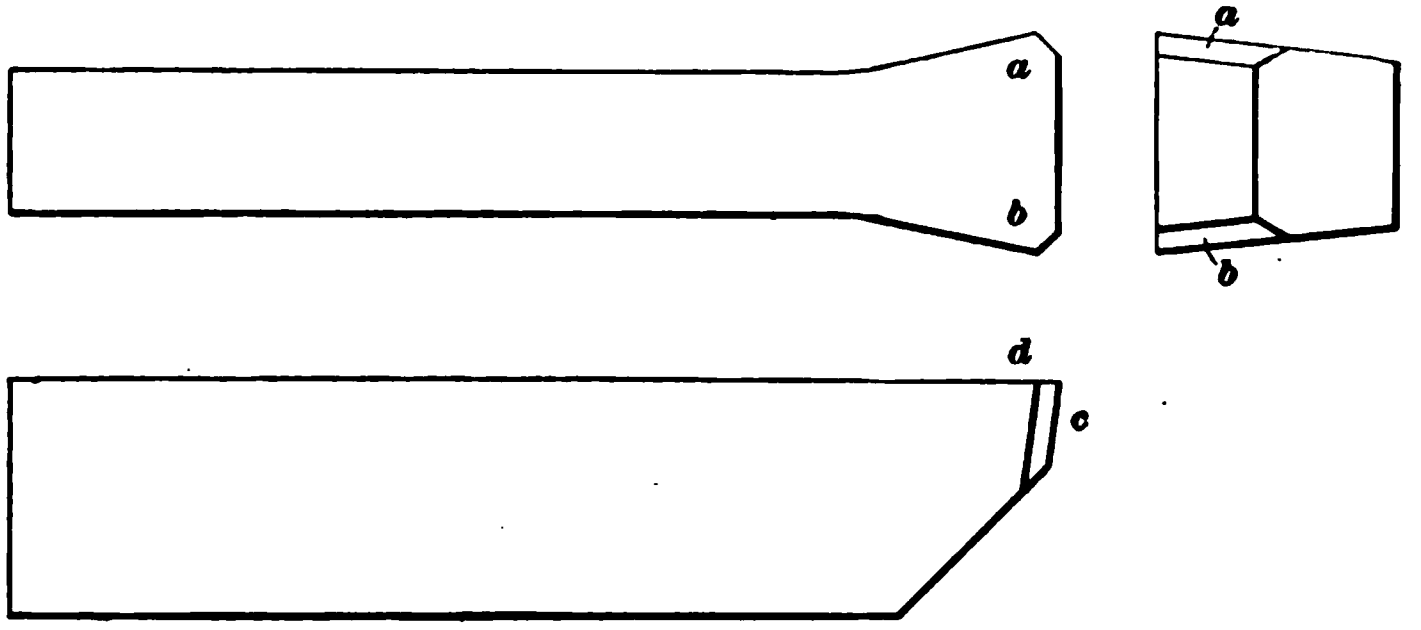

FIG. 5.

an angle of 45°, as shown. Grinding the corners in this manner prevents the breaking of the sharp corners that would otherwise occur. The front face of the tool is given a very little clearance, as shown at *c*. This rarely if ever amounts to more than 5°. This form of cutting-off tool is employed simply for cutting through the chilled iron. After the softer iron at the center of the roll has been encountered, an ordinary cutting-off tool may be substituted for the special one shown.

8. Holding the Tools.—Owing to the great strain to which tools employed for working chilled iron are subject, it is impossible to hold them in any ordinary tool post, and, hence, they must be clamped to the lathe very rigidly. The ordinary methods for holding the tools for turning parallel rolls are clearly shown in Figs. 1 and 2. In Fig. 2 the tool *c* is set on the carriage *h* and clamped down by means of the strap *e*, which is held in position by two bolts *f*. The tool is forced against the rolls by means of a series of set-screws *g*. Care must be taken to see that the front face of the rest is close to the roll, as shown at *i*. The closer this rest is to the roll, the less danger there will be of breaking the front face of the tool. The flat tools employed for this work may be originally $\frac{1}{2}$ in. × 5 in. × 5 in., but they are subsequently ground parallel to one axis only. If the tool is ground on one face only but two cutting edges can be obtained from one grinding. If the tool is ground on both edges, as, for instance, *j* and *k*, four cutting edges will be obtained. When these have been dulled, the tool is ground again, and each succeeding grinding makes it narrower. Tools can be used until they become so narrow that they can no longer be held by the clamps *e*. In Fig. 1, the clamps can be seen at *g*; in this case very narrow tools are being employed and packing pieces *h* are placed behind them for the setscrews *i* to bear against. The upper edge of the tool *c*, Fig. 2, is set $\frac{1}{2}$ inch below the center of the 10-inch roll. This, together with the concave form of the face, will give the proper amount of clearance. In setting cutting-off tools, they are clamped by means of one or more clamps similar to *e*, Fig. 2, and the back end of the tool is set against a setscrew or a packing piece held by two or more setscrews. In the case of cutting-off tools, it is necessary to have them overhang the front edge of the rest *i*, Fig. 2, to a greater extent than in the case of turning tools, and, consequently, it is necessary to have the tool deeper from the top to the bottom, so that it may be stronger. This is why the cutting-off tool shown in Fig. 5 is made $1\frac{1}{4}$ inches deep, and as the top face *d* comes above the center of the

roll, clearance must be allowed on the face *c*, Fig. 5. After the tools have been clamped in place they are fed to the work by means of the feed-screw *f*, Fig. 1, and are kept parallel with the face of the work by adjusting the setscrews *i*. The shavings resemble very fine needles or gray hair.

9. Cutting Speeds. — The cutting speed depends to some extent on the character of the chilled iron being turned, the character of the steel employed, and the number of machines run by one man. In the case of job work, or where one man has to give all his time to a single machine, it pays to run at a comparatively high speed and sacrifice the tools more rapidly, thus gaining a greater showing for the man's time; but, where it is possible to have matters so arranged that one man can operate five or six roll-turning lathes, a speed of 18 inches per minute is usually considered best, as at this speed the tools will last long enough to do a fair amount of work, and as they remain sharp longer they will produce a better surface. By running a number of machines, a man is able to turn out a good day's work. In some cases, where a limited amount of work is to be done and time is an important factor, work is run as rapidly as 3 feet per minute, but this is probably the maximum speed at which good work can be done on chilled iron.

10. Feed.—As has already been stated, in turning chilled iron a tool is never fed along the length of the work or at right angles to the face being turned; consequently, the motion that corresponds to a feed must be at right angles to the work. When turning rolls, the feeding is usually done by hand at a rate that rarely if ever exceeds $\frac{1}{100}$ inch per revolution. A portion of the surface of the roll corresponding to the faces of the tools in action is turned to the required diameter; the tools are then reset at another place and another part of the surface equal to that already turned is finished.

11. Cutting Off the Ends.—After the face of the roll has been turned to the correct diameter, it is cut off to

the proper length by means of cutting-off tools. The roll is never entirely cut off on the lathe, but is cut down until it has a narrow neck or, in case the roll was cast hollow, a shell about ¼ inch thick about the core; it is then removed from the lathe and iron wedges driven into the cut made by the cutting-off tool to force the end off. In case the roll is to be bored out and mounted on a bushing, the boring is done with ordinary tools in another machine, because of the fact that the central portion is soft.

TURNING ROLLS WITH CONCENTRIC GROOVES.

12. General Consideration.—Rolling-mill rolls are practically all turned with concentric grooves or with concentric rings about them, these rings being made by turning away the stock between so as to leave the rings projecting. Practically all rolling-mill rolls for moderate-sized work are cast in a parallel chill and are chilled to such a depth that the grooves will not turn through into the soft metal. Rolling-mill rolls may be divided into three classes: those made of chilled iron, called *chilled rolls;* those made simply of hard iron cast in a sand mold, called *sand rolls;* and those made of a mixture of cast iron and steel, called *semisteel rolls.* The two latter classes are not so hard as the chilled rolls, and are, therefore, turned in a manner more nearly approaching that employed in the turning of hard castings. We shall here deal simply with the turning of chilled-iron rolls.

13. The Lathe.—The exact form of lathe employed must necessarily depend to a large extent on the size of the rolls operated on. Fig. 6 illustrates a representative type of roll-turning lathe. It will be noticed that the lathe is very powerful, and is provided with double helical gears, so that the pull may be constant and that the teeth of the gears cannot cause hammering or backlash. The lathe is

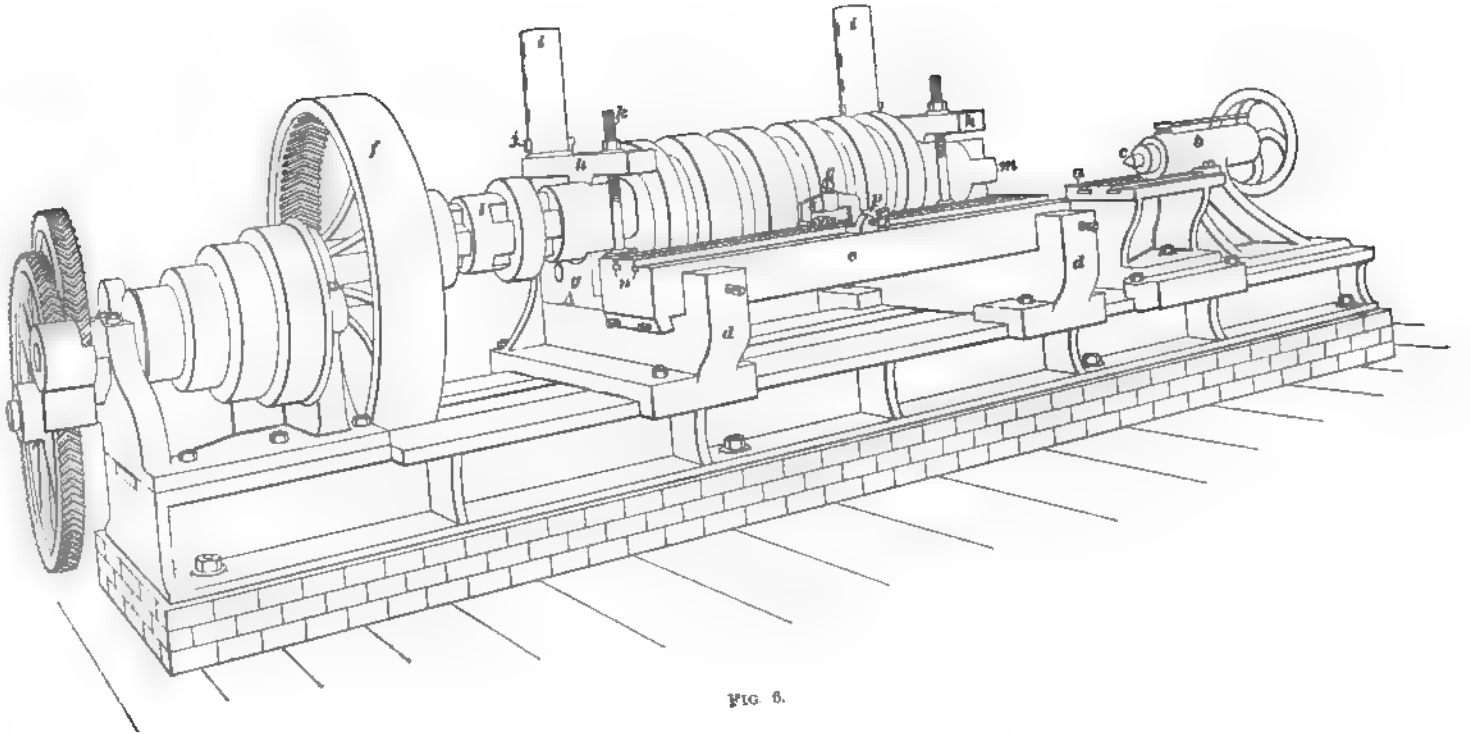

FIG. 6.

provided with a short carriage *a* for turning the bearings or for other similar work when it is necessary to traverse the carriage along the bed. The lathe is also provided with an ordinary tailstock *b* having a conical center *c*. This is employed when turning work between centers. The lathe is made very rigid and its bed is firmly bolted to the foundation. The supports *d* that carry the tool rest *e*, together with the tool rest, are made very rigid and massive, so that all vibration may be absorbed and there may be no lost motion whatever.

14. Holding the Work.—When the casting for a roll first comes from the foundry, it usually has a large riser head on one end that has to be cut off. This is ordinarily done in a regular engine lathe, and both ends of the roll shaft are trued up and centered in the lathe. Care must be taken to true the roll by the outside of the chill, so that during the subsequent turning of the chilled part there will be the least possible amount of stock to be removed. The surfaces for the bearings are then turned with the roll supported on ordinary conical centers in the ends of the roll shaft. The tailstock *b* and center *c*, Fig. 6, may be employed for this purpose, a regular center being introduced into the face plate *f* and the bearing turned by means of a tool or tools supported on a carriage *a*.

15. After the bearings have been turned either in the regular turning lathe or in an ordinary engine lathe, the roll is mounted in special housings, as shown at *g* and *h*. The lower half of the bearing *g* is supported largely on the bridge *d* that extends across the lathe and carries the tool rest *e*, and the upper half of the bearing *h* is made adjustable, one end of it being secured to the column *i* by means of suitable keys *j* and the other end held in place by the bolt *k*. This affords ample bearing surface for the support of the roll during turning and insures the turned portion being concentric with the bearings. The roll must not be rigidly attached to the face plate *f*, but is driven by means

of a universal coupling *l*. Sometimes, in order to take up any end motion of the roll, a piece is placed in the center in the end *m* of the roll and the other end of the piece placed against the center *c*, thus forcing the roll toward the bearing *g* and taking up all end motion.

16. Turning Tools.—The turning tools employed in turning rolling-mill rolls do not differ greatly in principle from those employed in turning parallel rolls; but in most cases the amount of parallel turning is considerably less, and cheaper tools can be used for the purpose. In turning rolling-mill rolls, higher and stiffer tools must be used for the grooving and similar work, and it would not be practicable, therefore, to use the thin tools ordinarily employed for turning the surfaces of parallel rolls, as the cutting edges would be so far below the center of the roll that they would have an excessive amount of clearance and hence become dull very quickly.

17. A good form of tool employed for surfacing rolling-mill rolls preparatory to grooving them is shown in Fig. 7. This consists of a bar of steel from $\frac{3}{4}$ inch to $1\frac{1}{4}$ inches square with four grooves cut the entire length of the bar along the middle of each face, as shown. The tool is hardened as hard as fire and salt water will make it, and is then

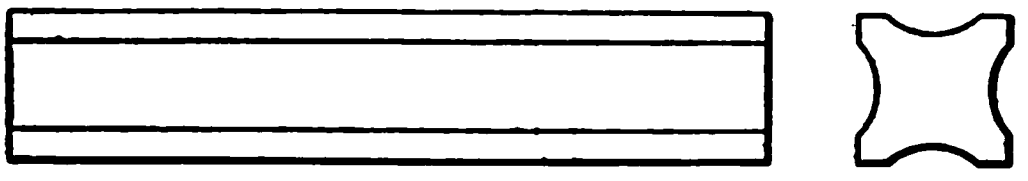

FIG. 7.

ground flat across each face, thus giving four cutting edges, one at each of the four corners. The grooves along the sides are made to reduce the amount of grinding necessary to sharpen the corners. Facing tools are also sometimes made by welding a piece of flat steel to the face of a piece of flat iron to bring the thickness up to an inch or more, then hardening and grinding as in the case of an ordinary tool; this method of facing cutters, however, is not as

advantageous as the one previously given, as it permits of only one edge, or, at the most, two edges, of the steel being employed as cutting edges.

18. Grooving Tools.—For all grooves having a circular cross-section, very efficient grooving tools may be made by turning up short cylinders of tool steel to the desired diameter, hardening them, and grinding the ends true. One of these tools is shown in Fig. 8. When it is desired to turn a groove to roll ovals, one of these circular tools is simply sunk into the face of the roll a short distance; when it is desired to turn grooves for rolling circular rods, a tool of the proper diameter is sunk into the roll to half of its depth. These tools are ground on both ends and can be used in at least four positions before they require regrinding; i. e., both the front and the back edges at the top and the bottom can be used.

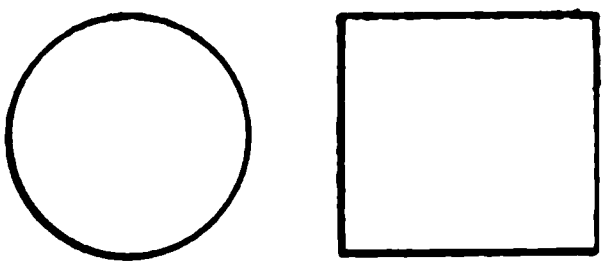

FIG. 8.

19. For turning rectangular grooves whose sides are either parallel or perpendicular to the length of the roll, a plain rectangular tool similar to a cutting-off tool is employed, as shown in Fig. 9. These tools, when narrow, are

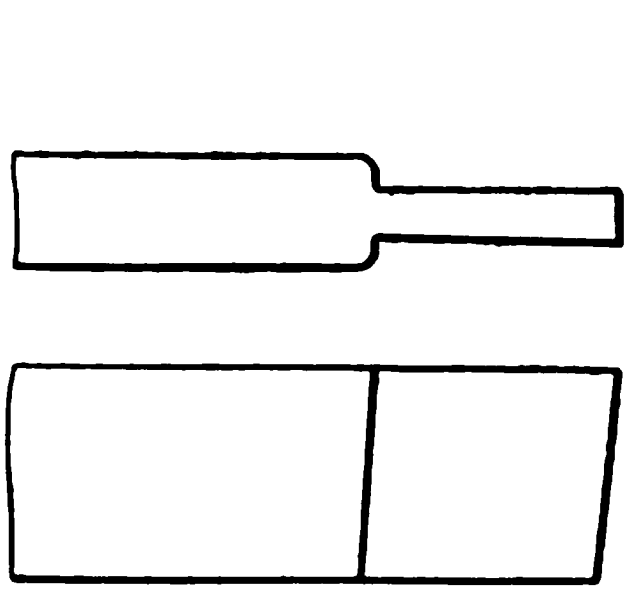

FIG. 9.

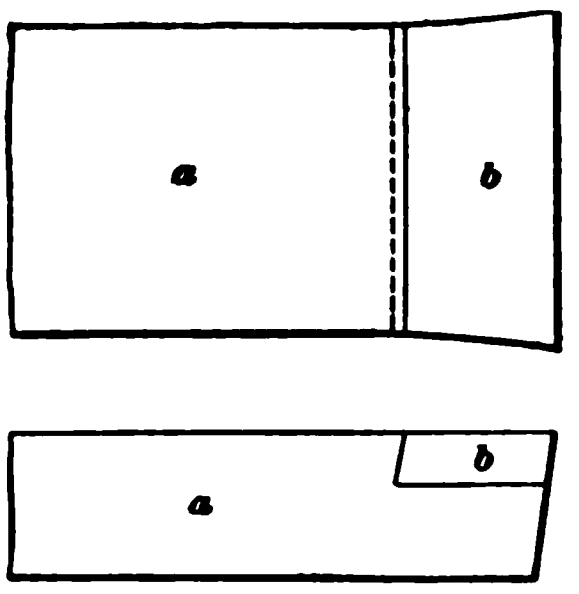

FIG. 10.

made wholly of steel; when wide, they may be made partially of steel and partially of iron, as shown in Fig. 10. A piece of wrought iron *a* is split open and worked out on the end to

receive the piece of steel *b*, which is welded into the wrought iron and hardened, after which the tool is ground and used as though it were a solid steel tool.

20. For turning rectangular or other polygonal grooves in which some of the faces of the grooves are neither parallel nor perpendicular to the axis of the roll, it becomes necessary to employ tools having special forms. For roughing out grooves for rolling squares, a tool similar to that shown in Fig. 11 may be employed, this tool being made of a wrought-iron body *a* with a steel cutting face *b*. It will also be noticed that the point *c* of the tool has been ground off to reduce the liability of its breaking. After this tool has been sunk into the groove to such a depth as to give the groove approximately its right width at the surface of the roll, another tool having a sharp point is introduced to remove the stock left by the point *c*.

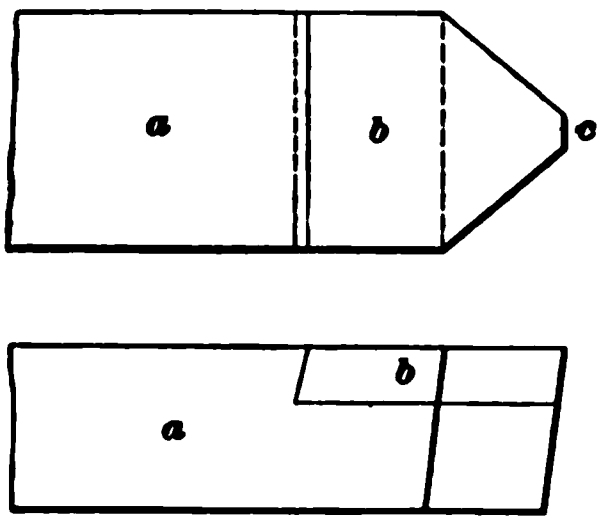

FIG. 11.

21. Sometimes it becomes necessary to face up the sides of grooves, in which case a tool of the style shown in Fig. 12 may be employed. This tool may be made of solid steel, as shown in the illustration, or may be made with a piece of steel welded to the top, as shown in Figs. 10 and 11. It will be noticed that the cutting edges *a*, *b*, and *c* are all given clearance, so that the tool can cut before itself, or to the right or the left.

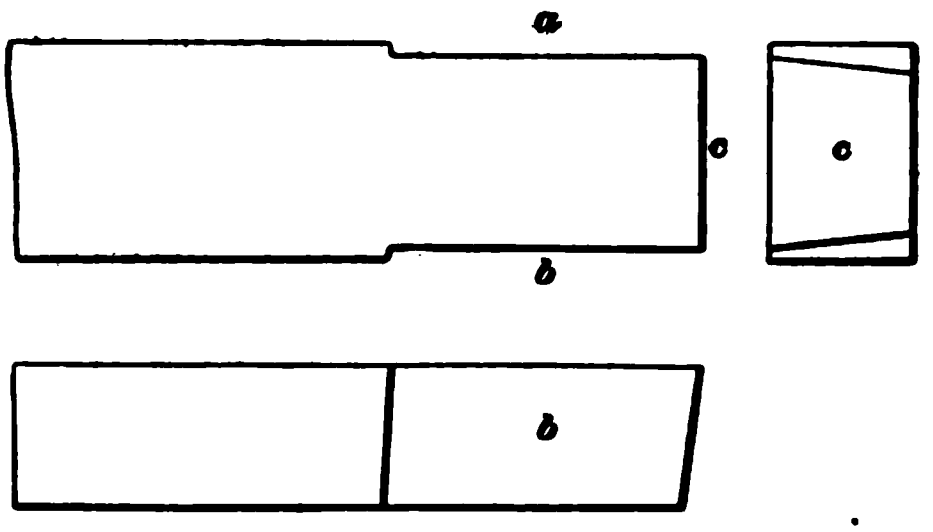

FIG. 12.

In turning irregular grooves, it is frequently necessary to make formed cutting tools. They may be made from solid

steel or by welding steel on iron, as shown in Figs. 10 and 11, and then grinding the cutting edge to the desired form. Sometimes the cutting edge is formed to approximately the desired form before hardening the tool. The tool is then hardened and the cutting edge ground to fit a templet of the desired form.

22. Clamping and Holding the Tools.—The tools employed in turning rolling-mill rolls are held in a manner very similar to those employed in turning parallel rolls, it always being necessary to clamp the tool as firmly as possible. The rest *e* of the lathe shown in Fig. 6 is provided with two T slots *n* and with rectangular holes in its upper surface, as shown. These rectangular holes are fitted with dogs *o* and *p*. The dogs *o* are similar to the ordinary planer plug, as shown in Fig. 13; the shank *a* is square or rectangular, depending on the form of the holes in the rest *e*, Fig. 6. In

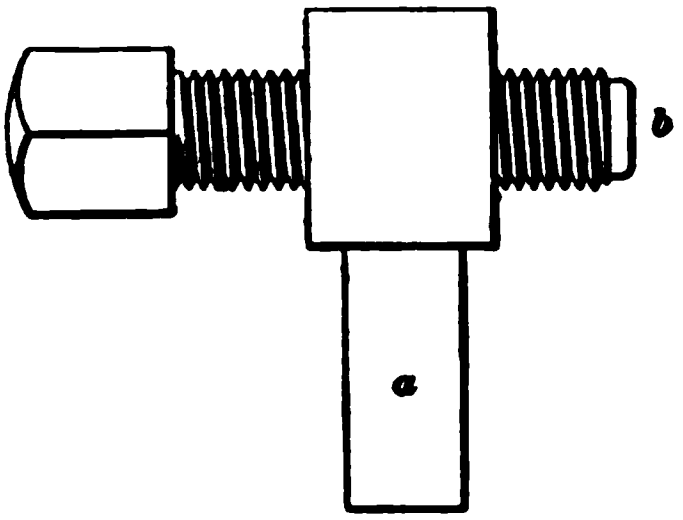

FIG. 13.

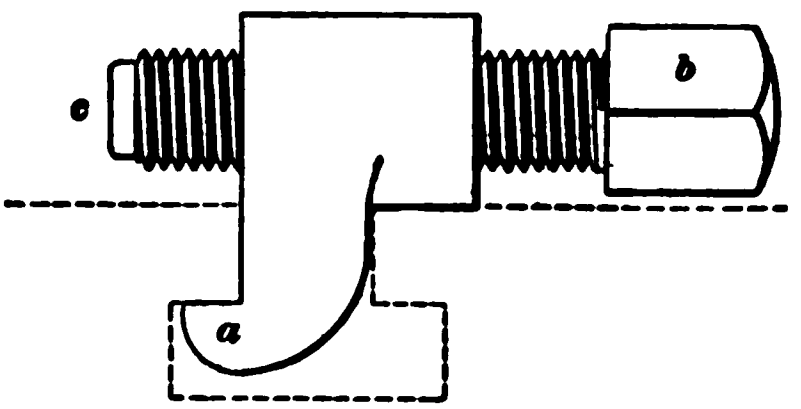

FIG. 14.

many cases these holes are rectangular, and, consequently, the point *a* is rectangular. The point *b* of the setscrew is brought into contact with the tool or the blocking. The dog *p*, Fig. 6, is of the general form shown in Fig. 14, and is arranged to fit into a T slot, as indicated by the dotted lines. The lug *a* is so formed that the dog can be easily removed from the T slot by simply lifting up on the head of the setscrew *b*, and when the point *c* of the setscrew is brought against the work, it will cause the lug *a* to take hold of the T slot and hold the work firmly in place. The tools are held

from behind and at the sides by means of the dogs shown in Figs. 13 and 14, and are held down by means of the setscrew or setscrews *r* in the clamp *s* shown in Fig. 6.

23. When tools of the general form shown in Fig. 8, intended for turning circular grooves, are to be clamped, they are held against the work by means of special blocks provided for the purpose, as shown in Fig. 15, *a* being the block and *b* the cutting tool. A setscrew is brought to bear against the end *e* of the block *a* to crowd the edge *c* of the cutting tool against the work, as indicated by the dotted lines *f g*. The tool rest *d* is placed as far under the block *b* as possible, and in some cases no clamp is placed on top of the block *b*, the resistance along the edge *c* being depended on to hold it down against the rest *d* and in the slot in the end of the piece *a*. The piece *a* is held by means of the screw *r* in the clamp *s*, Fig. 6.

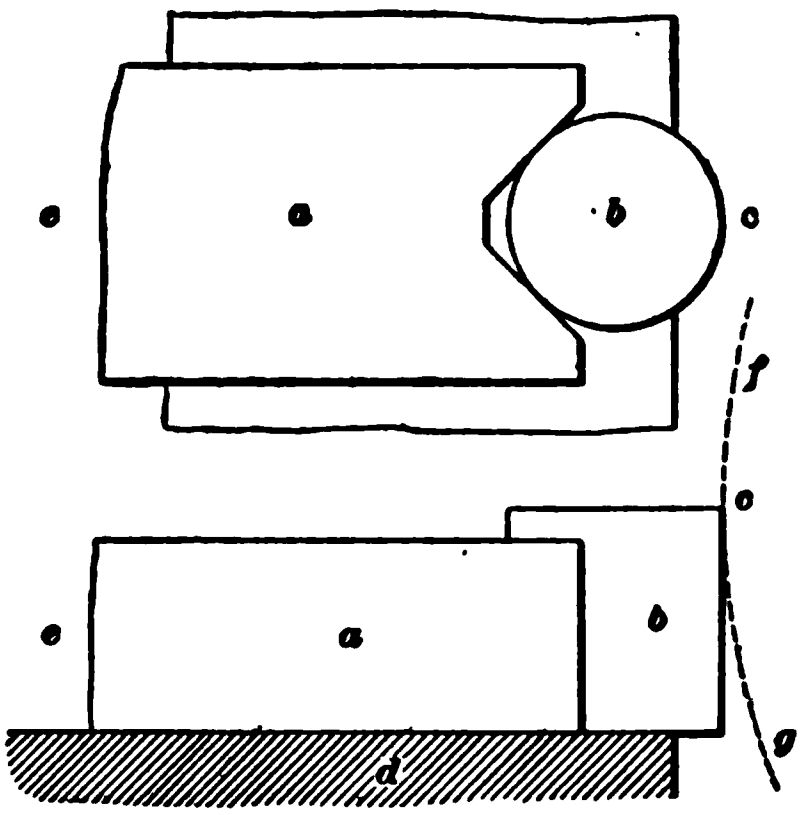

FIG. 15.

24. Allowance for Hot Iron. — In turning grooves for rolling-mill work, it is necessary to make the grooves somewhat larger than the standard bars they are intended to roll. To meet these requirements, an allowance of $\frac{1}{64}$ inch per inch is usually considered sufficient. For instance, a tool to cut a groove for rolling a 1-inch round bar would have to be $1\frac{1}{64}$ inch in diameter, and a groove for rolling a $3'' \times \frac{1}{2}''$ flat bar would have to be $3\frac{3}{64}$ inches wide, and similar allowances would be required for all shapes. All the tools employed in roll turning may be finished by grinding after tempering, if so desired.

GRINDING CHILLED ROLLS.

25. General Consideration.—Chilled rolls intended for use in flouring mills, calender rolls for paper-making machinery, and rolls for rolling some classes of sheet metal are finished by grinding. This is done to give a smooth surface and to insure the roll being parallel throughout its length.

26. Grinding Machine.—A machine for grinding flouring-mill rolls is illustrated in Fig. 16. The roll *a* is mounted in bearings *b* so that it is rigidly supported and revolved on the bearings on which it will ultimately work, thus insuring that the ground surface will be true with the bearings. The roll must be driven by some flexible coupling so as to allow it to run free in the bearings with no danger of cramping or displacement. This is accomplished by means of the universal coupling shown at *c* and the driving rod *d*. This driving rod *d* extends through the spindle *e* of the grinding machine and is secured by means of a universal joint at the driving-wheel end of the spindle.

The grinding is done by means of two emery wheels mounted on opposite sides of the roll, so that they act as a pair of calipers, the roll being ground between them. The emery wheels are driven by belts *f*, *f* and *g*, *g* and are adjusted by means of hand wheels, one of which is shown at *h*. The emery wheels are supported on a carriage *i*, which is traversed backward and forward on the bed *j* so that the wheels pass over the entire length of the roll. The roll is revolved by means of the belt *k* running upon a large band wheel *l* shown at the end of the machine, and the machine is arranged with suitable mechanism for traversing the carriage automatically, the length of the traverse being adjusted by means of stops. The emery wheels are mounted as shown in detail in Fig. 17. The emery wheel *a* is supported on a spindle *b* provided with conical ends *c*, *c*. These conical ends are carried in Babbitt bearings *d*, *d*. Mounted on the spindle *b* are two pulleys *e*, *e* on which the driving belts run.

The emery wheel is surrounded by a suitable hood *f*. The Babbitt bearings *d* are turned on the outside to fit bearings in the frame, as shown at *g*, *g*, and the adjustment in the

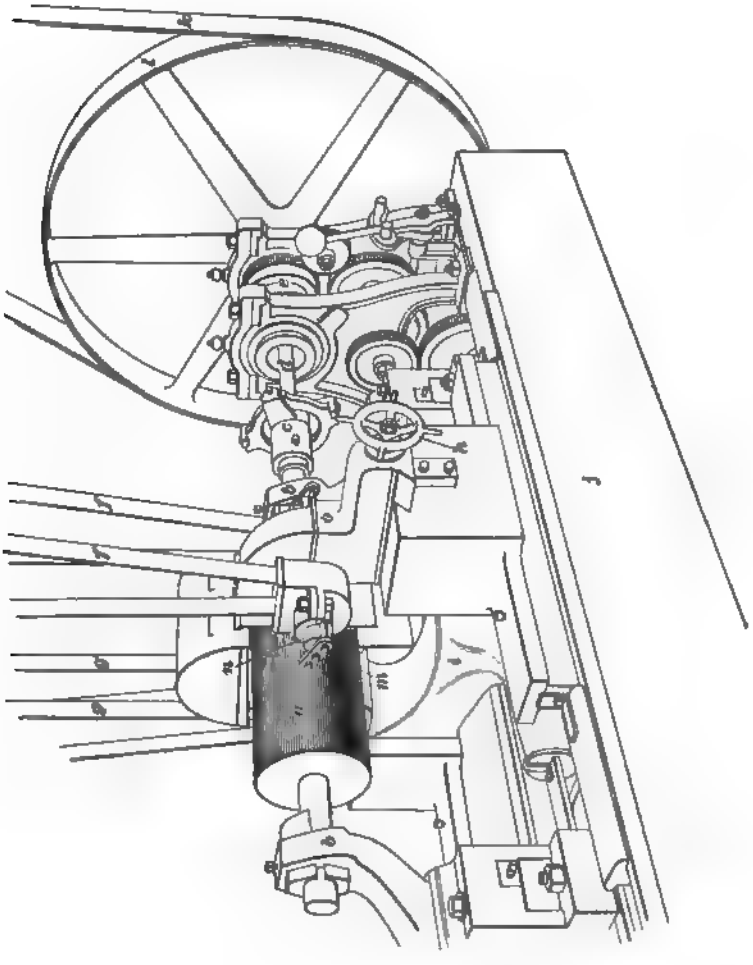

FIG. 16.

direction of the length of the spindle is controlled by means of the yokes *h*, *h* secured by studs as shown. By properly adjusting the bearings *d*, all end motion and play in the

emery-wheel spindle can easily be taken up. In grinding chilled rolls, it is necessary to be very careful about the adjustments of the emery wheel in order to be sure that there is no lost motion. The clamp yoke *k* in Fig. 17 is shown at *m*, Fig. 16, and the end of the Babbitt bearing is also shown at *n*, while the guard for the emery wheel

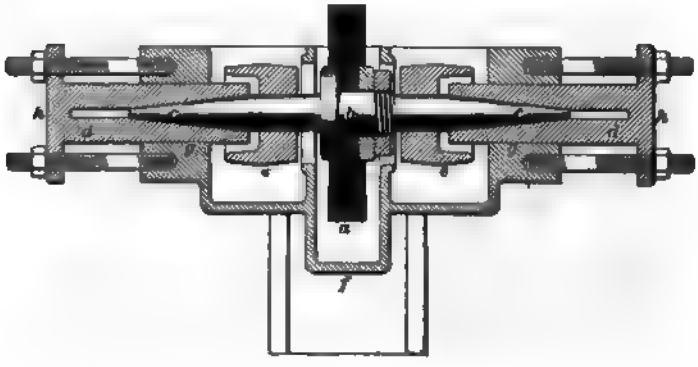

FIG. 17.

is shown at *o*. Rolls of larger diameter, such as large calender rolls, etc., are frequently ground on heavy machines especially manufactured for this purpose and so arranged that the emery wheels are placed in a swinging frame that constantly calipers the rolls. This is known as the J. Morton Poole grinding machine, which is described in *Grinding*.

27. Grinding Rolls. — For 12-inch rolls, the emery wheel should be 14 inches in diameter. One firm manufacturing a great many flouring-mill rolls employs a No. 2 grade, grain 80, carborundum wheel, though any wheel of corresponding grade and grain may be employed. If the 14-inch wheel is employed, it should be given about 1,600 revolutions per minute, and a 12-inch roll should be given about 30 revolutions per minute.

There must be plenty of soda water running on the wheels and the rolls during grinding, to keep the roll cool and to

carry off the dust. The operator adjusts the bearings *b*, Fig. 16, until the roll is in perfect alinement with the travel of the carriage *i*, and next adjusts the emery wheels to take equal cuts. The emery wheels are moved up by hand as the roll is gradually reduced until the desired size is obtained.

28. Testing Rolls.—If the rolls are properly ground they should fit perfectly, and in order to test them an arrangement similar to that shown in Fig. 18 is employed. A small carriage *a* is provided with carefully planed parallels *b* and *c*. Two rolls are laid on these parallels, as shown at *d* and *e*. The hose *f* is connected to a gas fixture and a series of gas burners are arranged on the pipe *g* so that they furnish a bright light back of the joint between the rolls. If the work has been properly done, no light whatever can be seen between the rolls, as they rest on each other and on the parallels. This gives an extremely delicate test of the accuracy of the workmanship on the rolls.

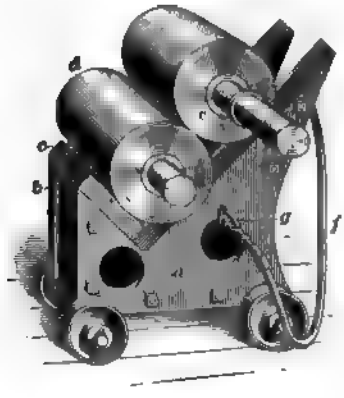

FIG. 18.

PLANING CHILLED IRON.

CORRUGATING ROLLS.

29. General Consideration.—Some of the rolls employed in flouring mills have to be corrugated after they are turned and ground. The corrugations are shallow grooves planed in the face of the rolls; they are not parallel to the

length of the roll, but have a slight spiral. These grooves are found necessary in certain classes of grinding rolls, not only to cause material to feed properly, but to produce the desired result upon the material being ground.

30. Corrugating Machine.—The machine employed for corrugating rolls is similar to a planing machine. One type of this class of machine is illustrated in Fig. 19, in which *a* is the roll being grooved. The weight of the roll is carried on suitable bearings *b*. The tailstock *c* is provided with a center that takes up any longitudinal movement of

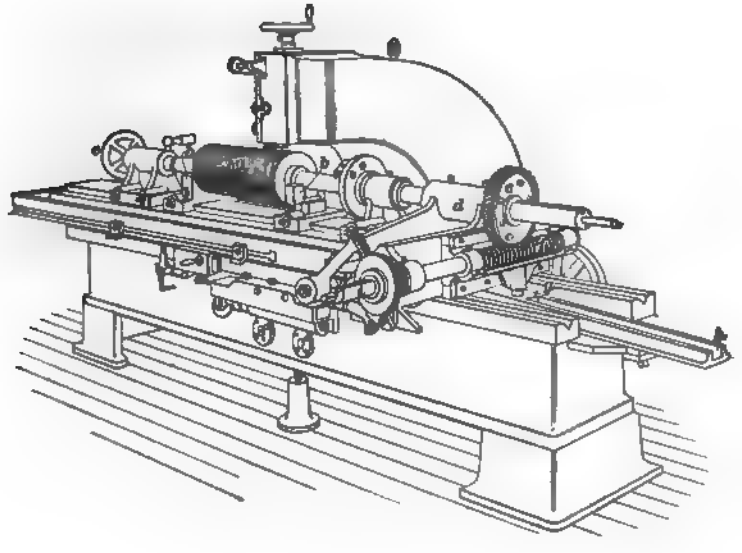

FIG. 19.

the roll, and the headstock *d* is provided with the necessary mechanism for rotating the roll through the proper angle to give the desired spiral. In the type of machine shown this is accomplished by means of a worm-wheel *e* and a worm *f*. The worm is made long so that it serves as a rack. It is controlled by the slide *g* traveling in the slot *h*. This slide carries the worm across the grooving machine as the roll

advances, and so rotates the worm-wheel *e* through a portion of a revolution during each stroke of the machine. The proper number of divisions or teeth are obtained by means of an automatic spacing device shown at the left-hand end of the worm-shaft *i*. This spacing device gives the shaft *i* a portion of a revolution after each stroke of the machine, thus advancing the cutting tool to the next groove.

31. Grooving the Rolls.—In grooving rolls, a wide tool similar to that shown in Fig. 20 is employed. This tool is made of $\frac{3}{4}'' \times 1\frac{1}{2}''$ steel. The tool is milled on the end with the kind of corrugation wanted, after which it is hardened. The tool is so set in the machine that it starts to cut on one side and each succeeding tooth takes a deeper cut, until the last one finishes the cut to the required depth. This rule holds good if the corrugations are not so large that considerable metal must be removed. In such cases it may be necessary to go around the roll twice to finish the grooves. In ordinary practice it is not possible to take a cut of over $\frac{15}{1000}$ inch in planing chilled iron, and, unless wide tools with a number of teeth are employed, it will take a very long time to do the grooving. In Fig. 20 the curved line *a b* represents the circumference of the roll, and it will be seen that each succeeding tooth takes a slightly deeper cut than the preceding, the tooth *c* finishing the groove. In grooving rolls, a speed of approximately 24 inches per minute is usually employed, and in some cases a speed slightly above this. One reason why a slightly higher speed can be employed in grooving than in turning rolls is to be found in the fact that the grooving tool is cutting during only a portion of the time, while the turning tool is under a constant strain.

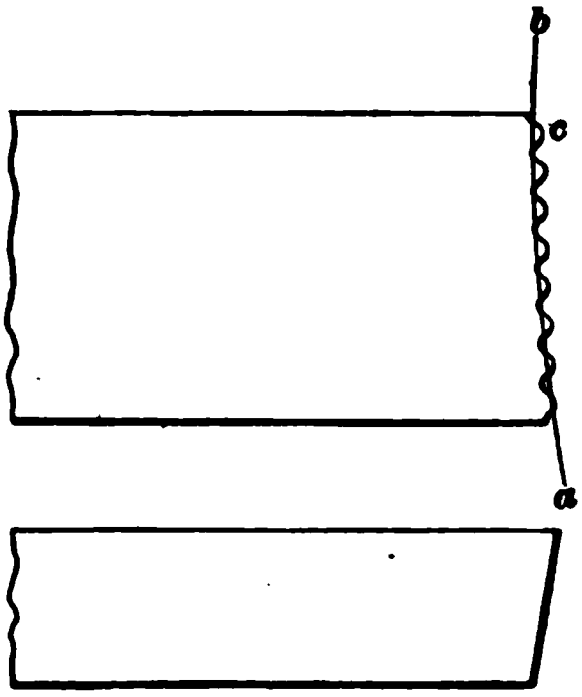

FIG. 20.

PLANING CHILLED-IRON DIES.

32. General Consideration.—It is frequently necessary to plane chilled-iron dies for pressed-brick machines, swage or anvil blocks, drop-hammer dies, and similar purposes. This work may be accomplished by making the speed of the planer sufficiently slow and the tools sufficiently rigid. In some cases, dies are planed by feeding a broad, square-nosed planing tool directly down on the face of the die, a slight amount of feed being given after each cut. When the width of the tool has been finished, it is moved along and a corresponding cut taken down to the proper depth. This method of procedure is exactly like that employed in turning chilled rolls. In other cases a fairly broad-nosed planing tool is adjusted so that it will act both as a roughing and a finishing tool and is given a slight feed across the planer after each cut, the cutting edge of the tool being of the general form shown somewhat exaggerated in Fig. 21; the portion *a b* is parallel to the surface of the work to be planed, and the portion *a c* is inclined so that it will act as a roughing tool to prepare the surface for the finishing cut. Such a tool as this is given a very slight clearance. It is possible to follow this practice of feeding sidewise in planing where it would not be possible to do so in lathe work, on account of the fact that all the feed occurs at the end of the stroke before the tool begins to cut, while in lathe work it is necessary to feed the tool sidewise during the cut.

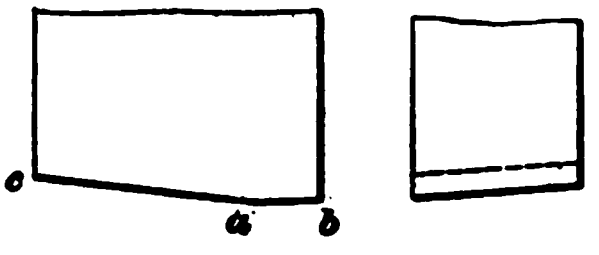

FIG. 21.

PLANER, SHAPER, AND SLOTTER WORK.

(PART 1.)

WORK OF THE PLANER.

THE MACHINE.

1. Action of the Planer.—The natural function of the planer is to produce a flat surface. This is accomplished by causing the work, which is fastened to a table that has a reciprocating motion, to pass back and forth under a cutting tool; the tool is fed across the work at right angles to the line of motion of the table.

2. Names of Parts.—A standard type of a modern planer is shown in Fig. 1. This machine consists of a **platen** *a*, which slides in V-shaped guides on top of the **bed** *q*. Heavy **housings** *b*, *b* are securely bolted to the bed, the movable **cross-rail** *c* being bolted to the front face of the housings. The cross-rail carries one or more **saddles** *d*, *d* (two in this case); these saddles have the **planer heads** *e*, *e* attached to them. Each head has a **slide** that is operated by the **down-feed handle** *f*. For holding the tool, each head is provided with suitable **tool clamps**, as *g*, *g*. The saddles can be moved along the cross-rail by

Copyright, 1901, by THE COLLIERY ENGINEER COMPANY.
Entered at Stationers' Hall, London.
All rights reserved.

means of **feed-screws**; for feeding by hand each feed-screw has a **feed-screw handle** *h*. The platen is driven

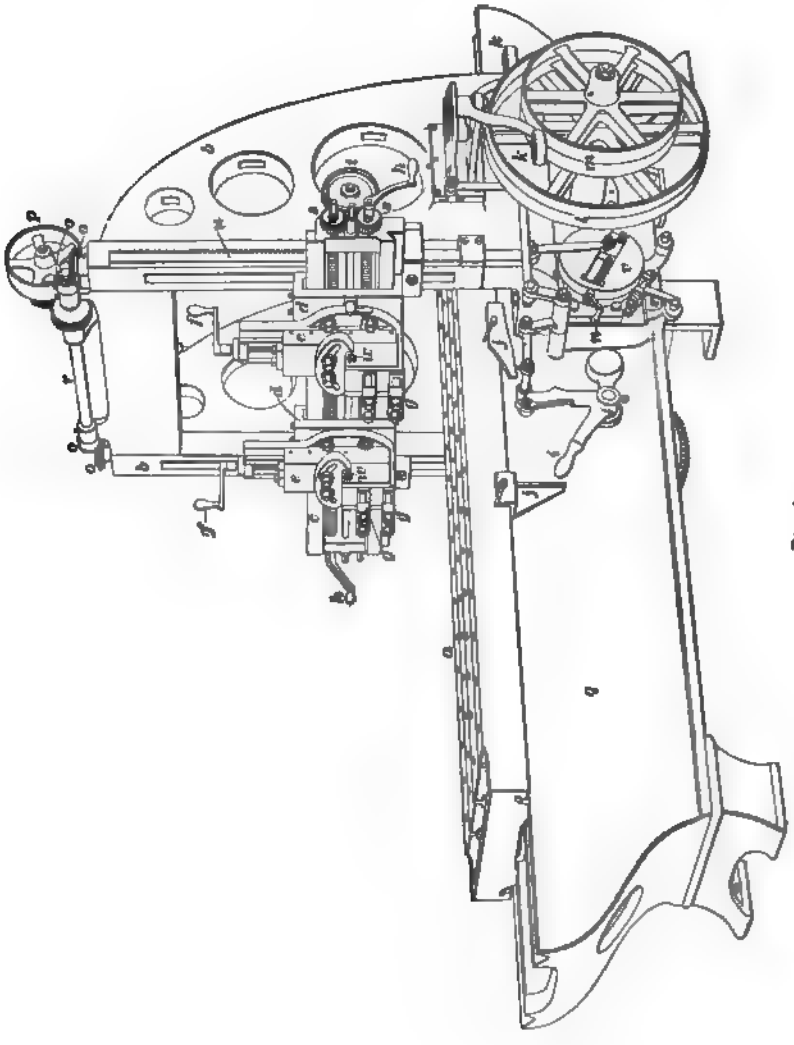

FIG. 1.

by gearing operated by belts placed on the **driving pulleys** *l* and **reversing pulleys** *m*. The direction in which

the platen moves is changed by **tappets** *j*, *j*, which engage the **reversing lever** *i*, which is connected in turn to the **belt-shifting levers** *k*, *k*. The cross-rail may be raised or lowered by means of screws within the housings; these screws are operated simultaneously by **bevel gears** *o*, *o*, one pair of which is fastened to the screws mentioned, while the other pair is fastened to the shaft *r*. This shaft is driven by spur gearing, which, in turn, is driven by a belt placed on the pulley *p*.

METHODS OF DRIVING.

3. Two Methods Commonly Used.—There are two methods of imparting motion to the planer table or platen. One is by a system of spur gearing, in which the power is transmitted from the belts to the table by means of gears. Planers thus driven are called *spur-geared planers*. The other method is by means of a spiral gear that engages with a rack on the under side of the platen. The worm is driven by gears and shafts, which, in turn, are driven by the belts. From the kind of driving mechanism used, such planers are called *spiral-geared planers*.

4. Spur-Geared Planers. — Fig. 2 shows how the driving gears are arranged on a **spur-geared planer.** Three shafts pass through the bed and have their bearings at the ends. Shaft *1* projects through the front side of the planer bed sufficiently to receive the driving pulleys *l* and *m*, Figs. 1 and 2. This shaft, near the back side of the bed, carries the pinion *a*, Fig. 2, which engages with the spur gear *b* on shaft *2*. Near the center of shaft *2* is a pinion *c*, which engages and drives a spur gear *e* carried on shaft *3*. This gear is the largest and heaviest in the train of gearing and is sometimes called the **bull-wheel.** On the under side of the platen, and between the guides, or V's, is a rack *f*, which engages with the bull-wheel *e*.

If we follow the motion of the gears when the belt-driven pulleys are moving in the direction indicated by the arrow *k*,

it will be found that the table will move in the direction of the arrow *n*. In order to reverse the direction of motion, two belts are used; one of these is an open belt and the other is a crossed belt. It will be seen by reference to Figs. 1 and 2 that there are two pulleys of each size on the shaft, one of each set being a loose pulley. When one belt is rotating the shaft *I* in one direction, the other belt runs in an opposite direction on the loose pulley of the other

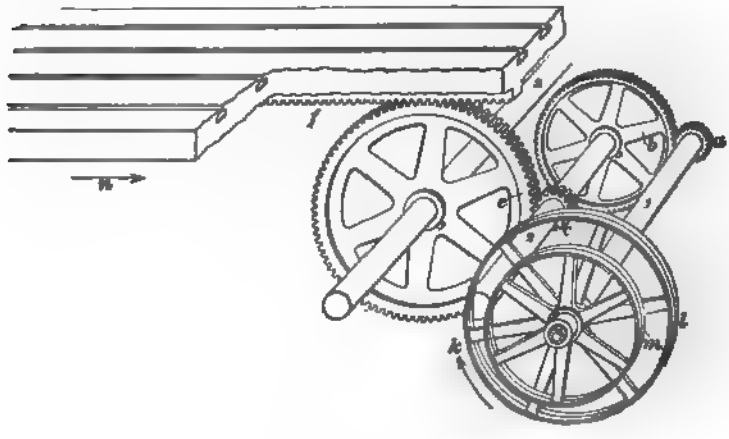

FIG. 2.

set. When the reversing occurs, the driving belt is run off the tight pulley to the loose pulley beside it, while the other belt is moved from its loose pulley to the fixed pulley beside it. This at once changes the direction of rotation of the shafts, and, consequently, the direction of motion of the machine. When the end of the stroke is reached, the reversing levers at once change the belts back to the original position and the planer moves forwards as before.

5. Quick Return.—It will be noticed in Figs. 1 and 2 that the driving pulley *l* and the return-stroke pulley *m* have different diameters. The pulleys on the countershaft to which these are belted also have different diameters. By this combination, the planer is made to run backwards on the return stroke at a rate of speed 2, 3, or 4

times as great as the forward, or cutting, speed. When planers are thus designed, they are said to have a **quick-return motion.** This method saves considerable time over the old-style machines, which required as much time for the return stroke as for the forward stroke.

6. Spiral-Geared Planers.—In the **spiral-geared planers,** two driving belts running in opposite directions

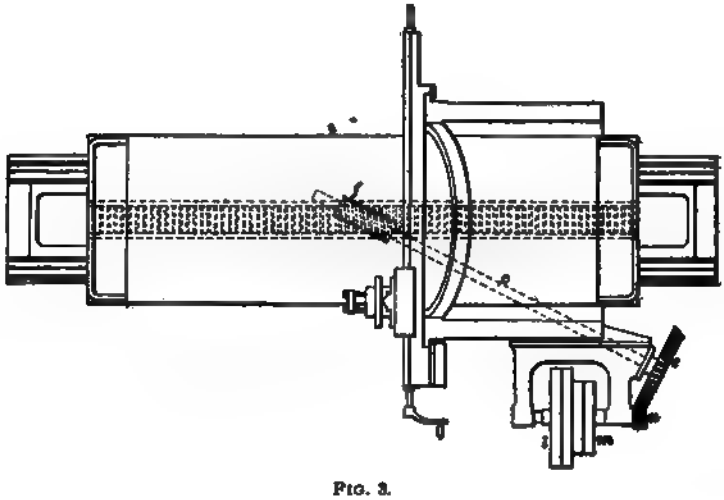

FIG. 3.

on tight and loose pulleys are used, the same as in the spur-geared planers. Fig. 3 shows a top view of a spiral-geared planer. The two driving pulleys are shown at *l* and *m*. It will be noticed that the shaft that carries the pulleys is parallel to the line of motion of the platen, while in the spur-geared planer shown it was at right angles to it. On the end of the belt-pulley

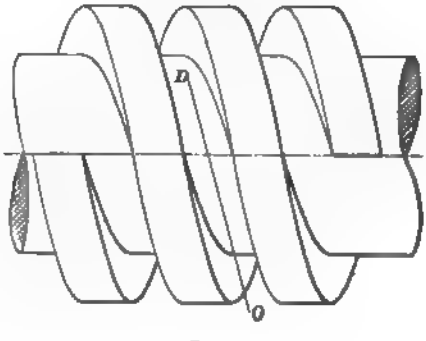

FIG. 4.

shaft is a small bevel gear *a*, which engages with a large bevel gear *e* on the shaft *c*. On the other end of the shaft *c* is a spiral gear, or worm, *f*, which engages with the rack on the under side of the platen and is shown in dotted lines in the illustration. It may be noticed by examining the threads of a worm or any screw, as, for instance, that shown in Fig. 4, that the threads are not square with the axis of the screw, but make some other angle than 90°, as shown by the line *O D*; the angle depends on the diameter of the screw and its pitch. On account of this fact, in a spiral-geared planer, the shaft *c* is set at such an angle that the line of the threads is at right angles to the line of motion of the platen, in order to give a direct pull. The rack on the under side of the table is specially cut, so that the worm fits it correctly. It is claimed that these spiral-geared planers are very smooth in their action.

SIZE OF PLANERS.

7. Definition.—The size of a planer is indicated by the width and height of the largest piece that will pass through its housings and the length of the longest piece that can be planed on its table. Thus, a $40'' \times 40'' \times 10'$ planer means that a piece 40 inches square will go through the housings and the table will take a piece 10 feet long.

8. Planer Heads.—Ordinarily, planers are equipped with but one head, but when specially ordered for particular work, two heads may be used on the cross-rail, as shown in Fig. 1. Large planers are frequently equipped with four heads, two being placed upon the cross-rail, as shown in Fig. 1, and the other two, called **side heads,** on the housings below the cross-rail. These side heads are used when special undercuts are being made, or when it is desired to face the sides at the same time that the top is being finished. There are some other types of planers used for special kinds of work, but they are modifications of the standard shape shown in Fig. 1.

FASTENING WORK TO THE PLATEN.

THE PLANER CHUCK.

9. When a piece is to be planed, it must be securely fastened to the platen in some manner. This operation is called **setting the work.** The manner of holding the work on the platen depends on the shape and size of the work. It may be held in a regular planer chuck or vise, by the use of bolts and clamps, by pins and jacks, or by special holding devices designed for the purpose.

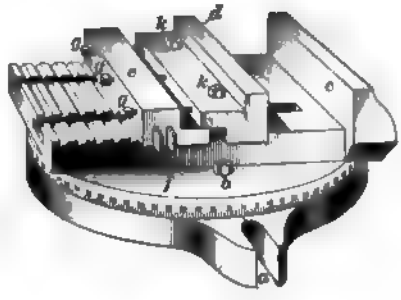

FIG. 5.

10. Description.—Fig. 5 shows a common type of **planer chuck.** It is fastened to the platen by bolts that may be slipped into slots at its sides, one of which is shown at *a*. The base of the chuck is circular, and is made in two parts, so that by unclamping the two bolts, one of which is shown at *b*, the other being at the opposite side of the chuck, the top part may be swiveled around in order that the jaws may be set at any angle. The bottom of the upper part is graduated to degrees for determining the angle when setting the jaws. One jaw *c* is fixed; the other jaw *d* may be moved to the proper position to hold the work. When work is to be held in the vise, the jaw *d* is moved against the work, and the block *e* is moved against the rear of the jaw. The block *e* is kept from slipping back by means of the strips *f*, *f*, which drop into the notches cut in the chuck, as shown. The nuts *k*, *k* in the jaw *d* are now screwed down, and it is tightened against the work by means of the setscrews *g*, *g*. Finally, the nuts *k*, *k* are tightened once more.

11. Square Planing.—Suppose that a rough cast-iron block 2½ inches square is to be planed square and true. If it is desired that the block be made with considerable accuracy, it should be planed all over with roughing cuts before any finishing cuts are taken. The work is put in a chuck and a cut taken over one side. After the work is planed on one side, it is given a quarter turn in the chuck, and is then clamped for planing the second side. Before taking the cut, it must be known that the finished side of the work is set perpendicular to the table, so that the cut on the second side will be square with the one previously finished. When the planer chuck is true and in good shape, the jaw *c* will be square with the bottom of the chuck, so that if work with a flat face be clamped against it and a cut is taken, the planed surface will be square with the flat face in contact with the jaw.

If the work is not true, care must be taken in clamping it, or the finished face will not be held squarely against the jaw. Suppose the work *w* to be tapered, as shown in

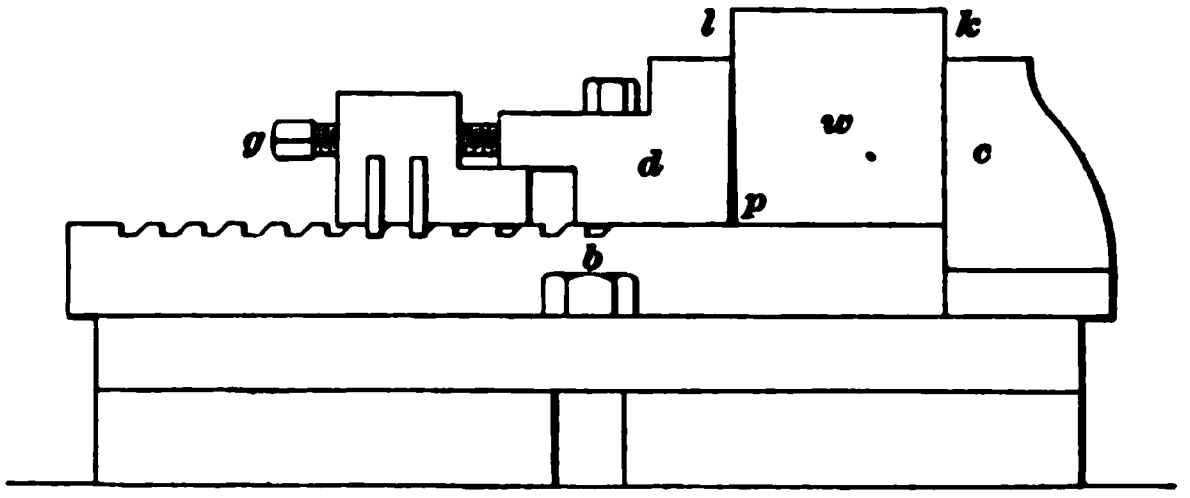

FIG. 6.

Fig. 6. The face *k* of the work is finished, but the face *l* is rough. When the jaws are tightened against the work, the pressure will come against the work at the edges of the jaws, while, at the bottom, the jaws will not touch the work. If the jaws are tightened, they will remain in the same position relative to the work, so that even though the face *k* has been planed, it will not be held flat against the jaw *c*. When a cut is taken with the work thus held, the latter will not be square with the finished face. If it is found that

this condition exists, the work may be made to come flat against the jaw by putting thin pieces of packing *p* (strips of paper or tin) between the jaw *d* and the lower edge of the work, as shown. This will cause a pressure against the lower edge of the work that will hold it squarely against the jaw *c*.

12. Instead of putting the packing pieces *p* between the jaw *d* and the work, Fig. 6, a false jaw *f* with a rounded

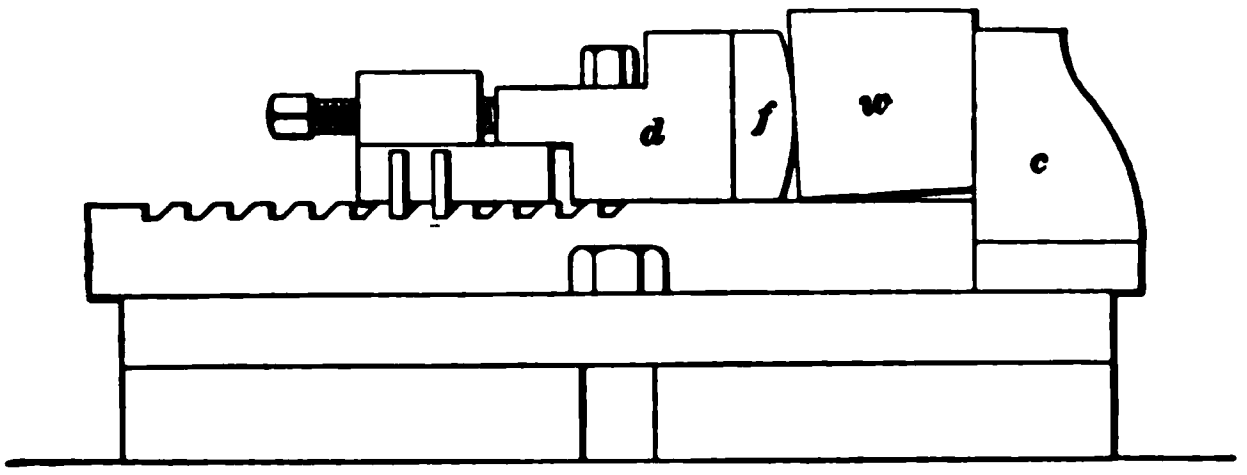

FIG. 7.

face, shown in Fig. 7, may be used. This rounded face will allow the work to turn slightly so as to bring its finished face squarely against the jaw *c*.

If no false jaw is available, the same end may be attained by placing a straight piece of copper or iron wire between the work and the movable jaw. The wire should be about the length of the work, in case it is shorter than the width of the jaw; if it is longer, however, the length of the wire should be equal to the width of the jaw.

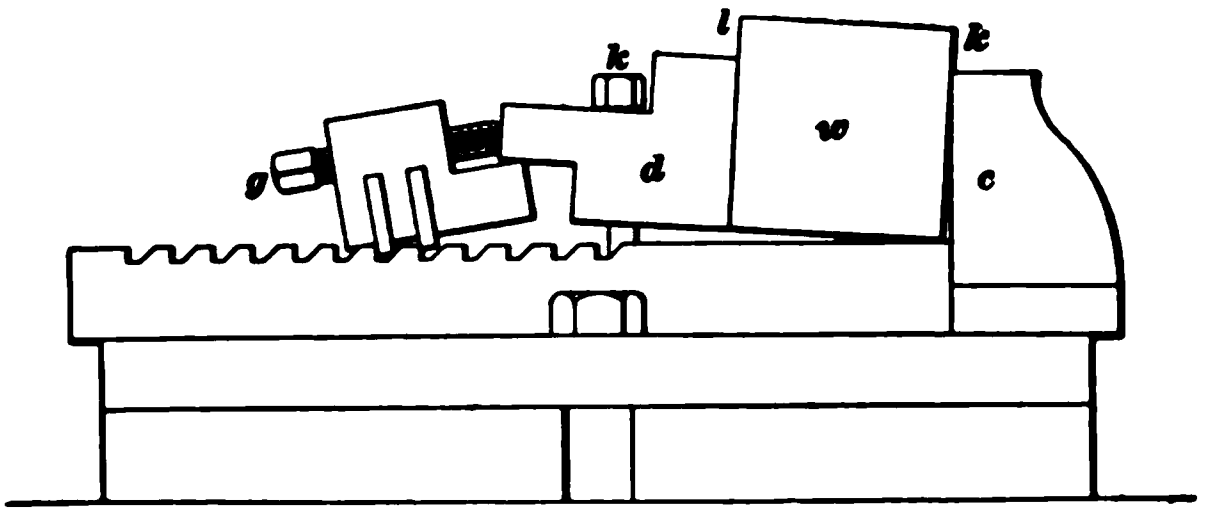

FIG. 8.

13. Another source of error that must be guarded against is caused by the jaw *d* rising slightly from its seat

when the screws *g* are tightened. Fig. 8 shows, somewhat exaggerated, what happens when the screws *g* are tightened on the work before the bolts *k* are tightened sufficiently to hold the jaw *d* to its seat. In this case, the faces *k* and *l* of the work are parallel, but the lifting of the jaw *d* will throw the work out of true with the jaw *c*, and if a cut is taken over the top, the work will not be square.

14. If the work projects beyond the ends of the vise jaws, the setting of the finished side may be tested by putting the stock of a try-square *t* on the platen and pushing the blade against the finished side *k*, as shown in Fig. 9.

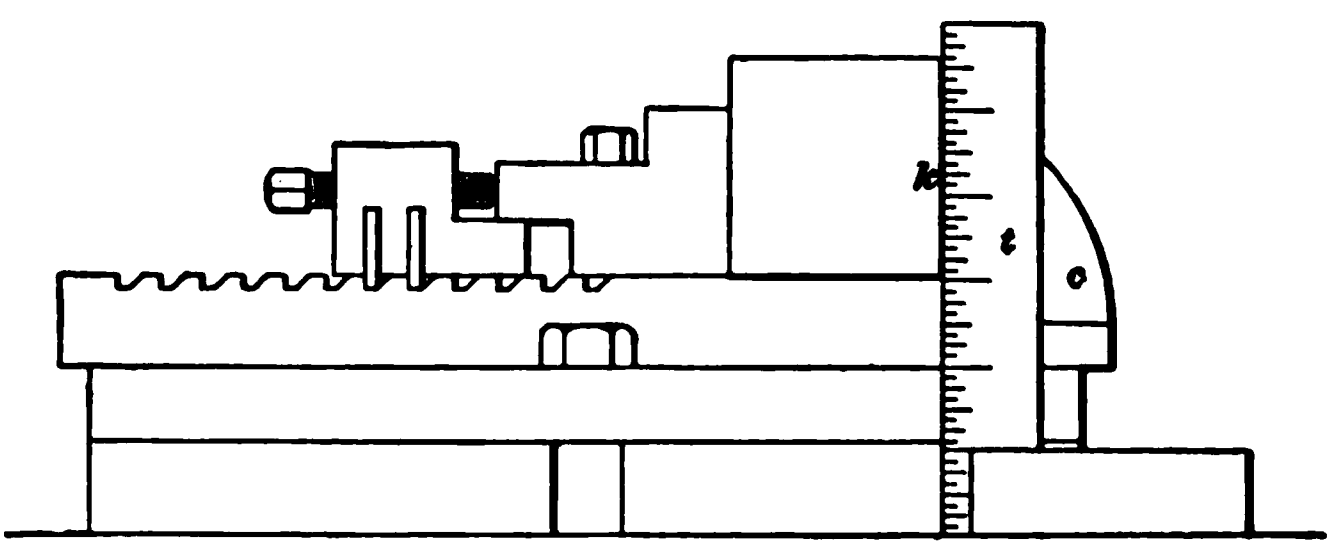

FIG. 9.

If the blade is in contact only at the top, or at the bottom, of the finished side *k*, it shows that the piece is not properly chucked. In order to bring the finished face square, strips of paper or tin may be put between the work and the jaw *c* at the top or bottom of the jaw.

15. Making Sides Parallel.—If the work is large enough to allow it to be set flat on the bottom of the chuck, as shown in Fig. 6, it will usually be near enough true to be planed parallel. To make sure that the work is fairly bedded, that is, in contact with the bottom of the fixed jaw, it is well, after the jaws are properly tightened, to strike the top face of the work with a lead or babbitt hammer.

When the work projects beyond the sides of the chuck, the bottom of the work may be set parallel to the bed by tapping with a hammer and testing by calipering, as shown in Fig. 10. If the work is short and cannot be planed on its

top face when set down on the bottom of the vise, it must be held up. To set it true so that the top face may be planed parallel with the bottom face, its setting may be

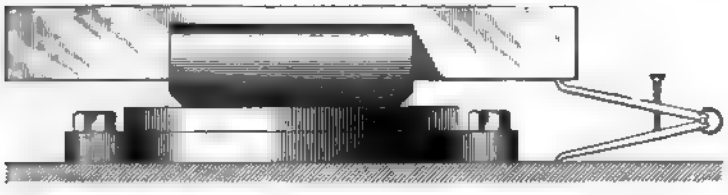

FIG. 10.

tested by inside calipers, measuring from the bottom of the chuck to the under finished face, and adjusting the work by tapping it with a soft hammer until the measurements are the same at all points.

16. Use of Parallel Strips.—A much quicker way is to use **parallel strips** *b*, *b*, Fig. 11, under the work *w*, and set the work down on these strips. Parallel strips are thin pieces of cast iron or steel that have been carefully machined so that the opposite faces are parallel with each other.

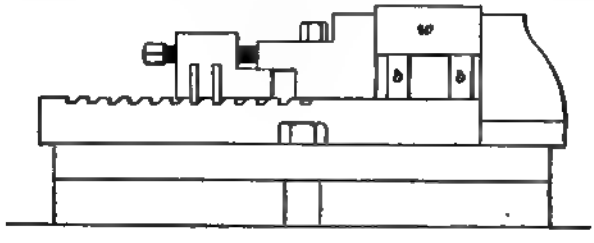

FIG. 11.

They are made of various sizes and thicknesses, to be used for different thicknesses of work, and are usually made in pairs. After the roughing cut is taken over the top face of the work, it is well to caliper its thickness at the ends to make sure that it is being planed parallel.

17. Use of the Surface Gauge.—Suppose that one side of a tapering piece of work is to be planed. Then a line is laid out and marked by prick-punch marks to aid in

setting the work correctly in the vise jaws. For testing the setting, a **surface gauge,** one design of which is shown at *S* in Fig. 12, may be used. A surface gauge consists of a heavy base *b* with a flat face that carries a standard *c* of some kind, to which a pointer *p* is attached by a clamping device in such a manner that it can be moved along the standard and clamped anywhere. In addition, the pointer

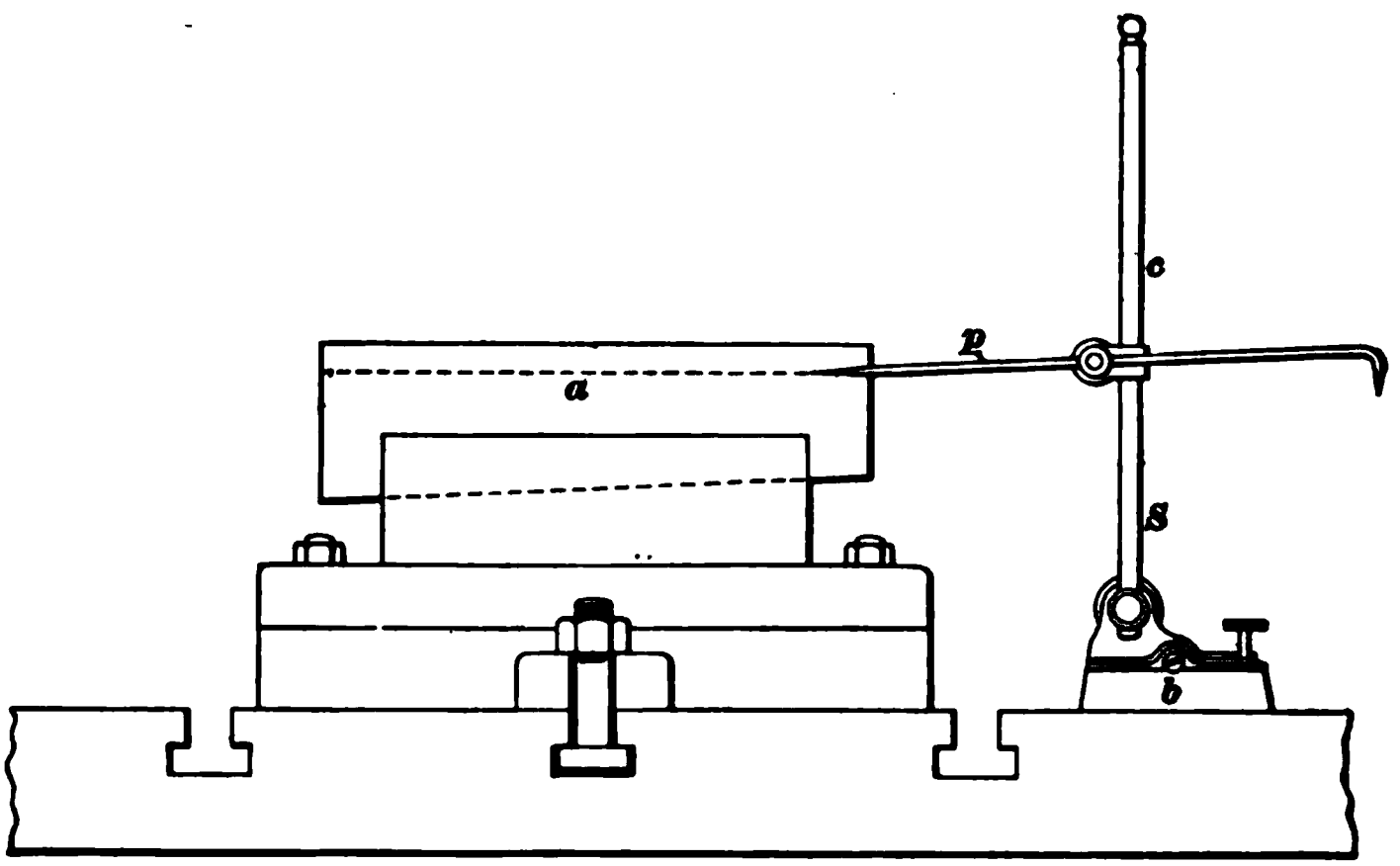

FIG. 12.

can be swiveled around the clamping device. In use, the pointer *p* is adjusted to one end of the line *a* drawn on the work, which in Fig. 12 is shown held in the planer chuck. The base resting fairly on the platen, the surface gauge is now moved to the other end and it is noted if the pointer coincides again with the line *a*. If it does not do so, the work is shifted by tapping it lightly with a hammer and the testing and shifting is repeated until the surface gauge shows the line *a* to be parallel to the platen.

18. When a number of tapering pieces are to be planed, tapered strips may be used in the vise to set the work on, in the same way that parallel strips are used to produce parallel work. When these tapered strips are used, the work is bedded fairly on them; there is then no necessity of setting each piece separately by the aid of a surface gauge.

19. A surface gauge may not only be used in setting work to a line, but is also well adapted for testing the parallelism of surfaces with the platen. For instance, let a piece *c* having the profile shown in Fig. 13 be held in the chuck, and let it be required to adjust it so that its surfaces *a* and *b* are both the same height above the platen. Then the contact point of the surface gauge is placed on the surface *b*, while the

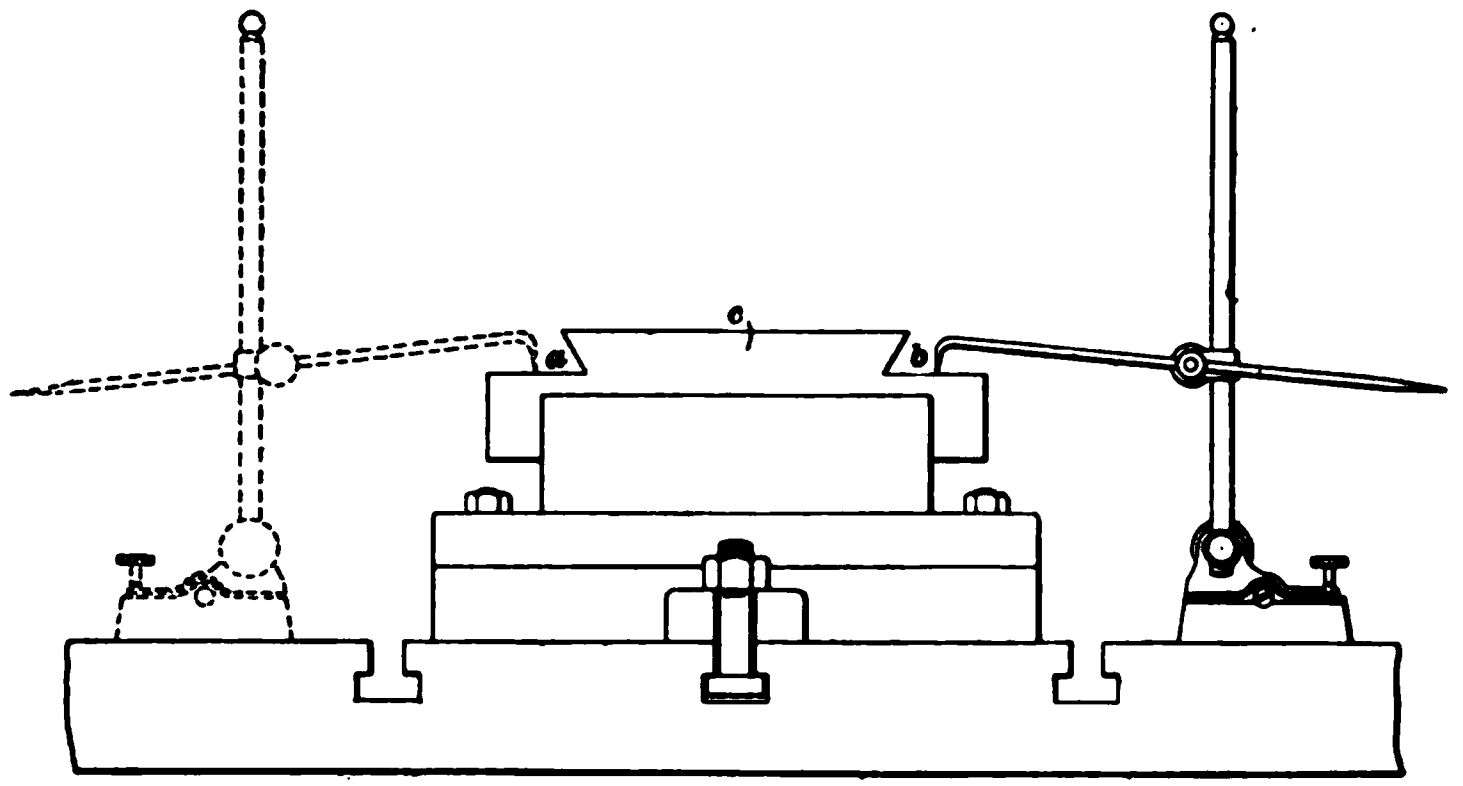

FIG. 13.

base rests fairly on the platen; the surface gauge is now placed on the other side of the work in the position shown in dotted lines, and it is observed if the contact point touches the surface *a*. If it does not do so, the work is moved as required; the contact point is readjusted, and the setting of *a* and *b* is tested again. This operation is repeated until the surface gauge shows *a* and *b* to be at the same height above the platen.

20. Special Jaws.—For some classes of work, **special jaws** may be made and fastened to the regular jaws of the planer chuck for holding particular shapes of work. But if many such pieces are to be made, it is better to make a special jig, or holding device.

21. Truing the Planer Chuck.—When it is found that the planer vise is out of square, thus causing the work to be held untrue, the vise should be trued by taking a very

fine, smooth cut over the jaw *c*, Fig 5, and also over the bottom of the jaw on which the work rests. Before this cut is taken, the chuck should be cleaned thoroughly, and care should be taken that there are no chips or dirt between it and the planer platen.

BOLTS AND CLAMPS.

22. Method of Applying.—If the work is large, or for other reasons cannot be held in the ordinary chuck, it may be fastened to the platen by **bolts** and **clamps.** T slots are cut in the top of the platen to receive the boltheads, and holes are provided for pins to keep the work from slipping.

23. Fig. 14 shows a part of a planer platen with a flat block *a* fastened to it by the use of bolts *b*, *b* and clamps *c*, *c*

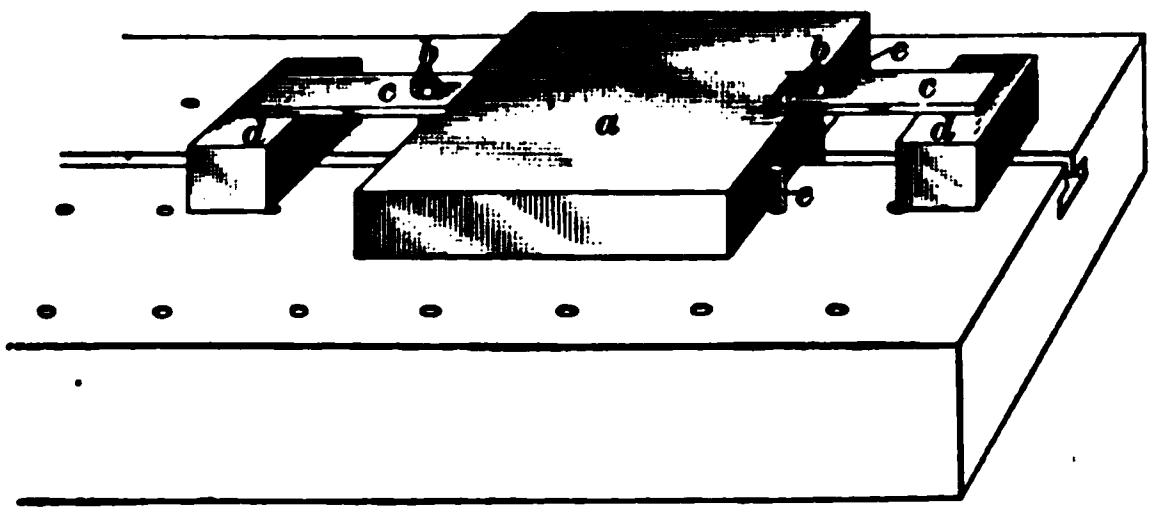

FIG. 14.

resting on packing-blocks *d*, *d*. These clamps are pieces of flat bar iron 2 inches × $\frac{5}{8}$ inch, or of similar proportion, with holes drilled near the ends for the bolts to pass through. When applying clamps to a piece of work, care should be taken to adjust them so that the bolts come very near the work, as shown in Fig. 14; also that the packing-blocks *d*, *d* are the same height as the work, or slightly higher. Fig. 14 also shows how stop-pins *e*, *e* are used to prevent the work from sliding along the platen while a cut is being taken. The stop-pins are merely removable pins inserted in holes drilled in the platen.

24. Imagine that in Fig. 14 the piece *a* is the packing-block, and that *d* is the work. Then, with the bolt *b*

close to the packing-block, the tightening of the nut will cause the clamp to grip the block tightly, while the work will be left comparatively loose. For this reason, the bolt should always be placed as close as possible to the work. Now, if the packing-block is too low, the bolt must bend when the nut is tightened, owing to the clamp sloping downwards. Furthermore, the tendency will be for the clamp to push the work away.

This is shown in Fig. 15 (*a*). It will be observed that as the nut on the bolt is screwed down, the clamp bears only against the edge of the work and the packing-block, and that the pressure is acting not directly at right angles to the platen, but at an inclination to it. In consequence of this, there is a tendency for the work to slide away from the clamp. Since the clamp is in line contact with the extreme edge of the work, it is very likely to mar the edge badly. For these reasons, care must always be taken to make the packing-block high enough to insure a fair bearing of the clamp on the work. When the packing-block is just the same height as the work, and the clamp is bent and applied with its convex side downwards, as shown in Fig. 15 (*b*), or when the clamp is so thin as to readily bend when the nut is tightened, the same effect will be had as if the packing-block were too low. That is, there will be a tendency to push the work away and also to mar the edge. Now, if the packing-block is slightly higher than the work, the edge of the clamp will be in contact with the surface of the work, and any tightening of the nut will, by reason of the bending of the clamp, bring it in more intimate contact with the surface of the work.

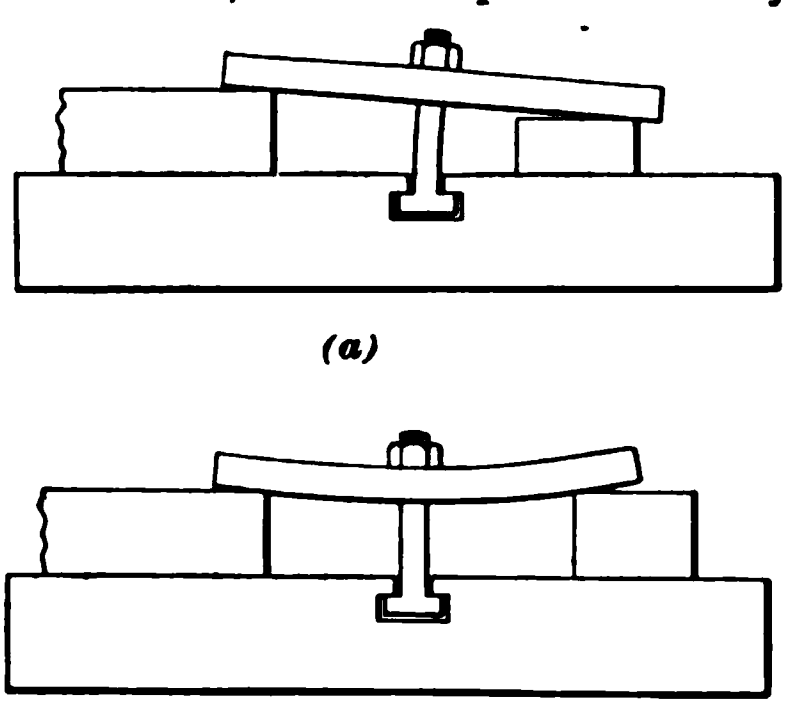

(*a*)

(*b*)

FIG. 15.

25. Shapes of Planer Bolts.—Planer bolts are ordinarily made with large square and flat heads; they are slipped into the T slots in the platen from the ends. This form of head is the strongest. It sometimes occurs in clamping work to the platen that when heavy work is set in place, it is desired to apply a bolt and clamp to some part of the inside of the work without moving the latter. For this purpose, a special form of bolthead is used that allows the bolt to be slipped into the T slot from above, instead of from the ends. Fig. 16 (*a*) shows such a bolthead; two opposite sides are cut away so that it will drop into the slot. After it is in place, it is given a quarter turn, so that the head comes under the lips of the T slot. The bolt is kept from revolving when the nut is tightened by the ends of the head coming against the sides of the T slot.

Another method of applying clamping bolts to such places is by means of a T-shaped nut, as shown in Fig. 16 (*b*).

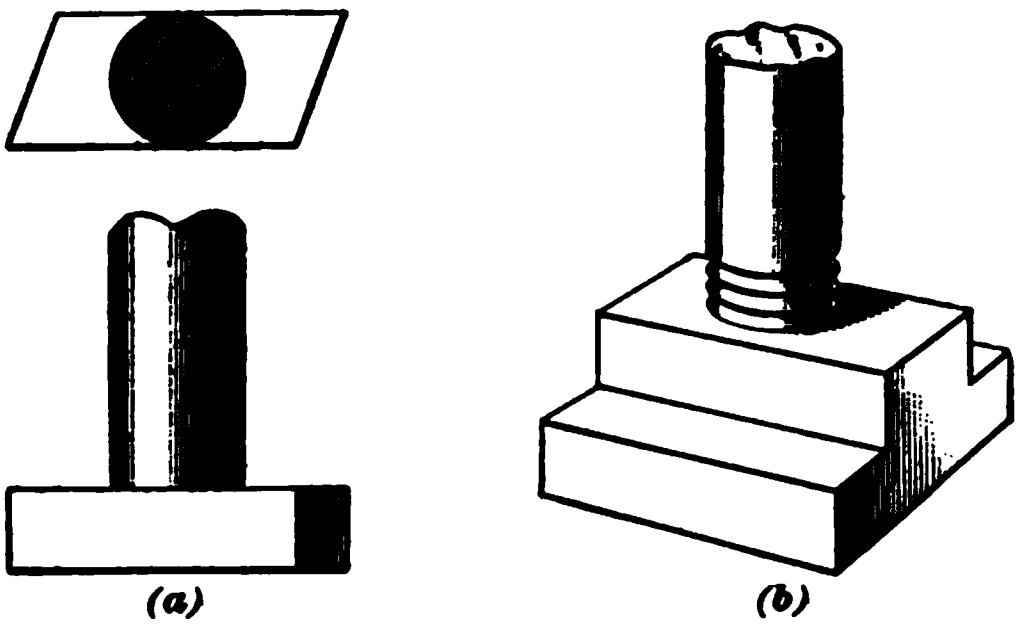

FIG. 16.

This nut may be slipped along the T slot and under the work to the desired place, after which a bolt may be screwed into it.

26. Bent Clamps.—Besides the common flat clamp shown at *c* in Fig. 14, the **bent clamp** *a* shown in Fig. 17 is often used. A bent clamp is convenient when it is desired to keep the end of the bolt out of the way of the tool as it passes over the work, or when no bolts long enough for

a straight clamp are available. It is a rather expensive clamp to make and does not possess any particular advantages over a straight clamp; for this reason, it is rarely used

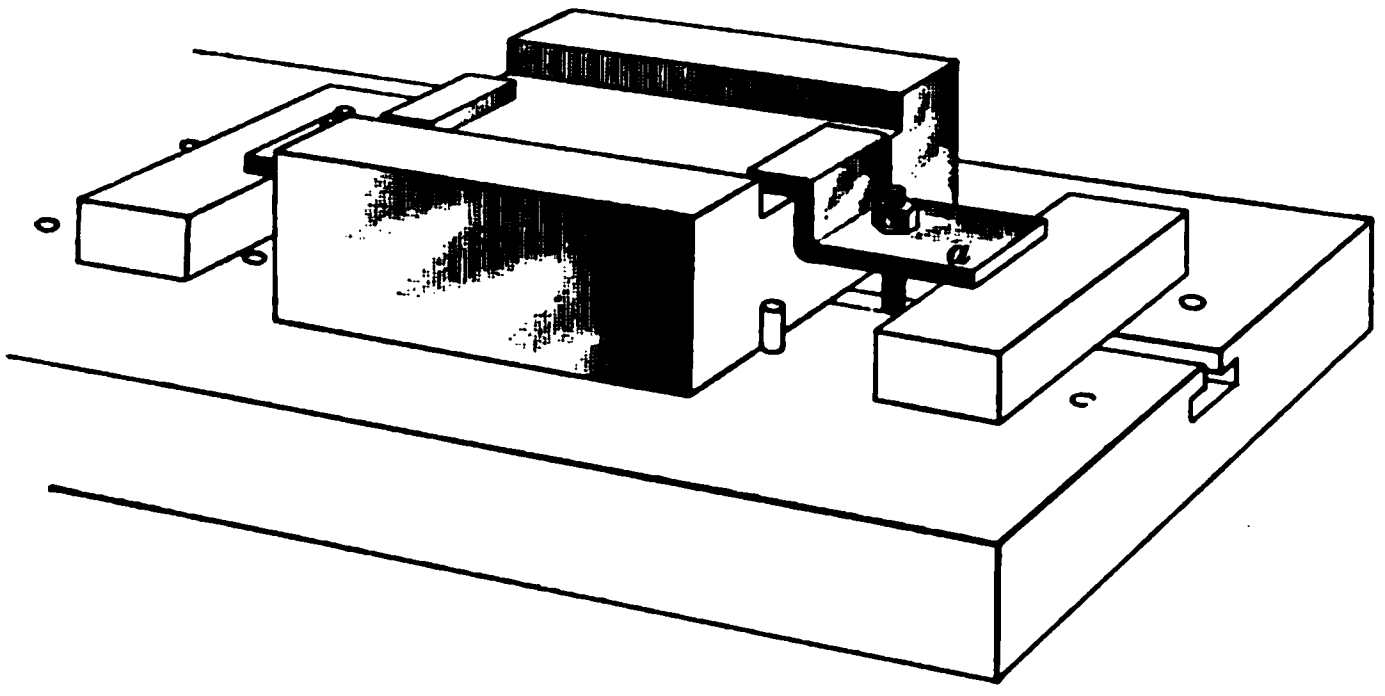

FIG. 17.

by experienced planer hands, except for work where a straight clamp will not answer.

27. When a number of pieces of the same thickness are to be planed, a clamp may be made as shown in Fig. 18. This clamp has one end bent over at a right angle; the bottom is cut off parallel to the top, so that when it rests squarely on the table, the top of the clamp will be level. With this style of clamp, packing-blocks are unnecessary.

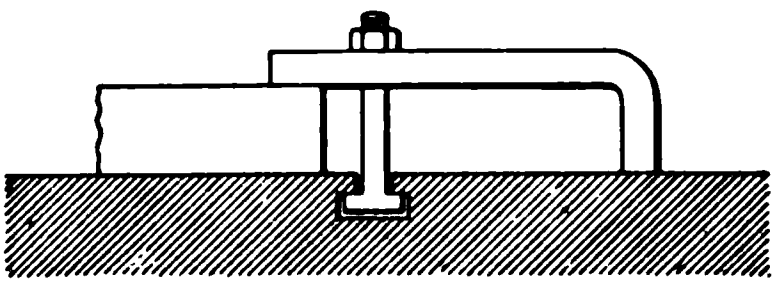

FIG. 18.

28. U Clamps.—Fig. 19 shows a form of clamp that is very convenient when it is desired to remove the clamp without removing the nut from the bolt. This clamp is made of square iron and is bent into a **U** shape, with an opening sufficiently wide to allow it to slide over the shank of a bolt. It will also be found convenient on account of the fact

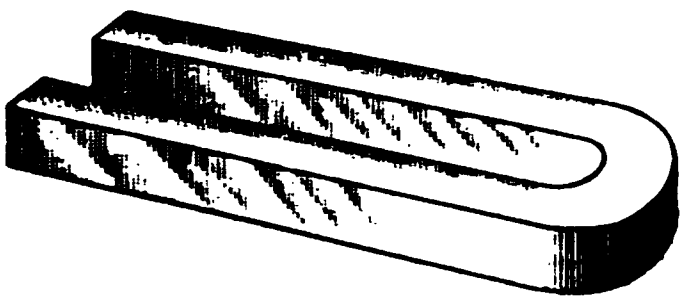

FIG. 19.

that the bolt can be moved along the clamp in order to get the bolt into the most desirable position. Likewise, the clamp can be moved to suit the work in case the bolt must occupy a certain position. Taking it all around, this is probably the most useful form of clamp for general work, since it has the widest range of application. It is applied in the same manner as the ordinary flat clamp. Always place a washer between the clamp and the nut used for tightening it, in order to have a fair bearing for the nut.

29. Finger Clamps With Bolts.—It often occurs that some flat face is to be finished all over when the work is of such a shape that there is no place to put the clamps except on the top face. In that case, the work is often planed as far as the clamps allow; the clamps are then moved to the planed part and the cut is continued.

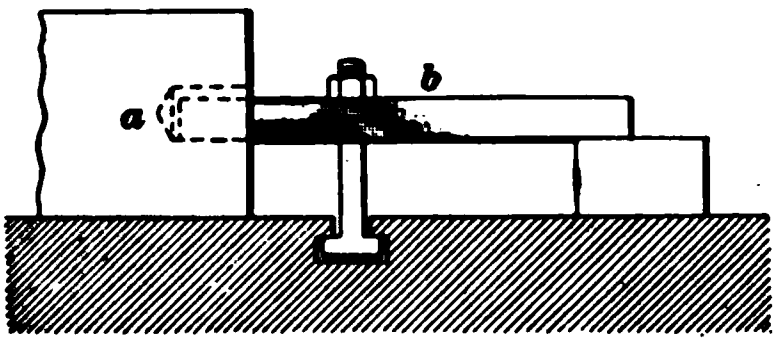

FIG. 20.

Sometimes, however, it is possible to drill holes in the side of the work and use **finger clamps,** which save much time. Fig. 20 shows a side view of a piece of work *a* with a finger clamp *b* in place. The clamp has one end forged or turned round so that it will fit loosely into the drilled hole. If these holes are drilled into the solid casting, they may be filled after the work is finished. The conditions of each particular case will determine whether a finger clamp can be used or not. When it is inadvisable or objectionable to drill holes for them, the work must be held in some other manner.

PLANER PINS.

30. Shape.—A very convenient method of fastening work to the planer is by the use of **planer pins,** or **screw plugs,** one of which is shown in Fig. 21. One end *a* is

turned round to fit the holes in the platen, while the other is left square and tapped for a steel setscrew *b*. Fig. 22

FIG. 21.

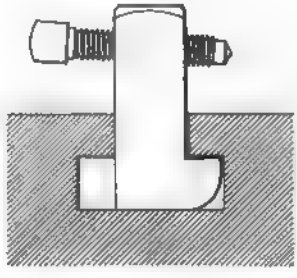

FIG. 22.

shows the same style of pin made to fit in the T slot of a planer platen.

31. Method of Using. — Fig. 23 shows one way in which they may be used. A **planer strip** *a*, which has been previously planed square, is bolted to the platen so that the edge against which the work bears will be true with

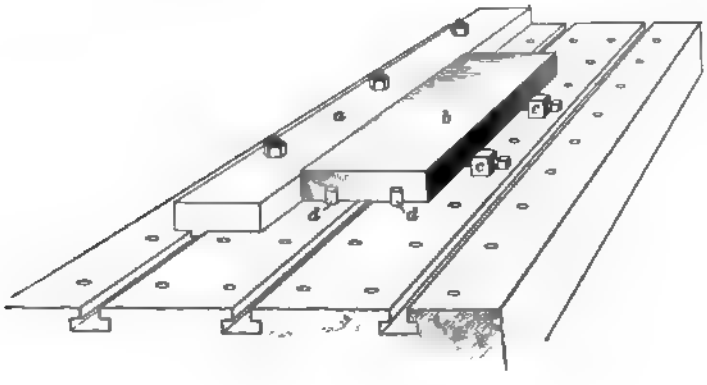

FIG. 23.

the line of cut. For this purpose, the planer strip is provided with a tongue that fits the T slots. The work *b* is put against the strip, and two pins *c*, *c* with setscrews are put in

the holes in the platen and the screws set up against the work. The screws push the work against the planer strip. While the friction will be sufficient to hold the work against a light cut, it would be pretty sure to slip under a moderately heavy one, and hence stop-pins *d*, *d* should be placed in front of the work to prevent any longitudinal movement.

32. Toe Dogs.—Thin work may be fastened to the platen by screw pins and **toe dogs.** The toe dogs used for this class of work are shown in Fig. 24. They are usually made of tool steel with one end flattened to press against the work and the other cupped to receive the end of the setscrew. The thin end may be hardened, so that its edges *a*, *a* will cut into the work and thus be kept from slipping. Some persons prefer a wedge-shaped edge, like that of a chisel, on the flattened end. For holding work that is finished on its edges, it is advisable to make the toe dogs of soft iron to prevent them from marring the work.

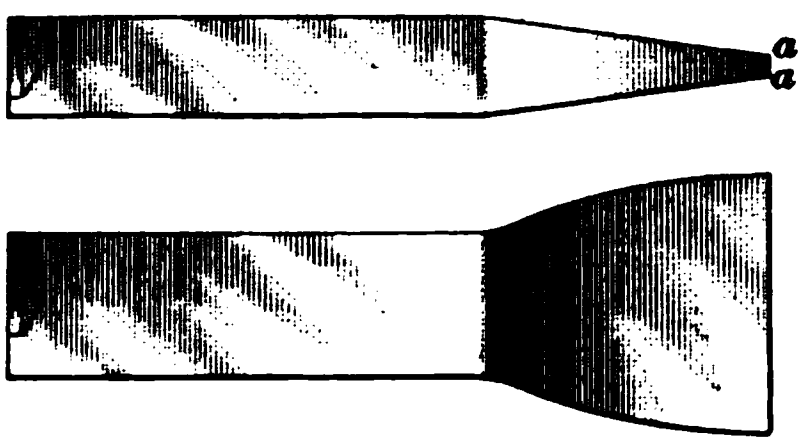

FIG. 24.

A number of pins and dogs may be put on each side of the work. It may be seen, by referring to Fig. 25 (*a*), that

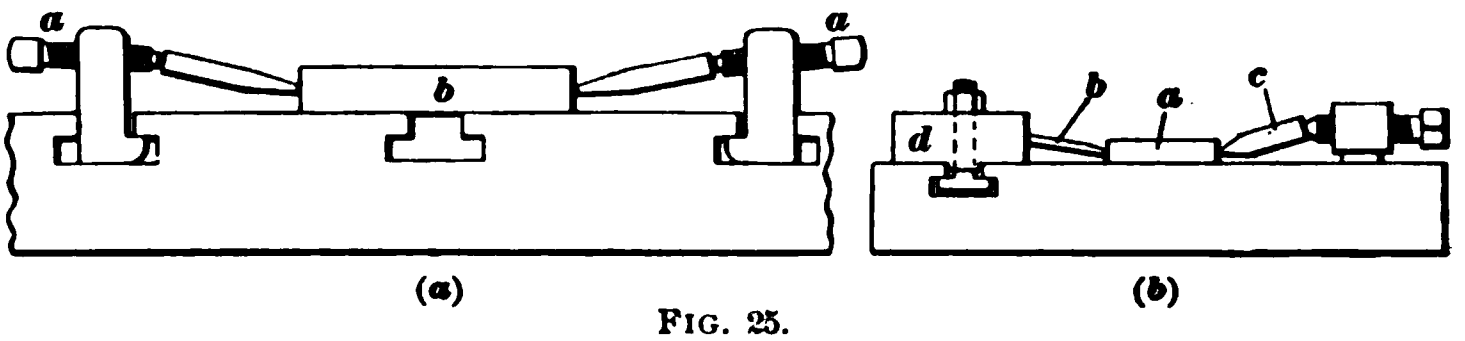

(*a*) (*b*)

FIG. 25.

as the screws *a*, *a* are tightened, there is a tendency to push the work *b* down on the platen, thus holding it securely.

33. The slant of toe dogs must not be so great that the tightening of the setscrew will tend to turn the outer end

upwards about the edge in contact with the work. In general, the inclination of a line drawn from the point of contact to the point of the setscrew should not exceed 10°.

34. Toe dogs are sometimes applied to work held in the planer vise. They are then placed between the jaws of the vise and the work, so that the tightening of the movable jaw will press the work to the bottom of the vise. In some cases, toe dogs may be used in connection with a planer strip; being then placed on one side of the work only, they will push the work against the planed side of the planer strip and down on the platen at the same time.

35. Since toe dogs do not hold the work very tightly in the direction of the cut, it is always advisable to put stop-pins in front of the work to keep it from slipping.

A thin strip or straightedge may be used with or in place of toe dogs for holding work. Fig. 25 (*b*) shows a piece of work *a* held on a planer table by the straightedge *b* and the toe dogs *c*. The straightedge rests against a planer strip *d* or against two blocks bolted down in the same manner. The piece *b* is inclined as shown, so as to keep the work in contact with the table. A straightedge may be used in a similar manner for holding work in a planer chuck.

36. Clamping Round Work.—If a shaft is to have a keyway or spline cut along its length, it may be clamped to the table in the manner shown in Fig. 26. Here the shaft *a* is

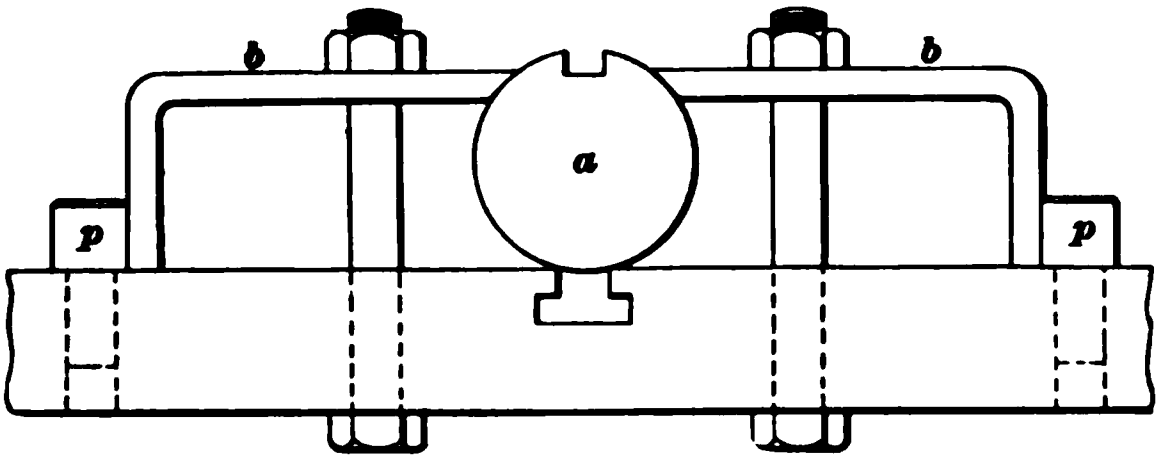

FIG. 26.

held in one of the T slots in the platen, and bent clamps *b*, *b* are applied to each side. To keep the clamps from slipping

down on the sides of the shaft, stop-pins *p*, *p* are put in the platen to hold the clamps in place. If one clamp is made much tighter than the others, there is a tendency to spring the work, especially if there are many clamps along the side. The stop-pins may be made with an enlarged cylindrical head to prevent their slipping through the platen. The shoulder at the junction of the head and shank may be beveled slightly; this allows the point of a screwdriver or pinch bar to be used for prying them out of the hole.

37. A better method of holding long shafts that are to be splined is to have a long planer strip *a* bolted to the platen, as shown in Fig. 27. This is beveled as shown so that

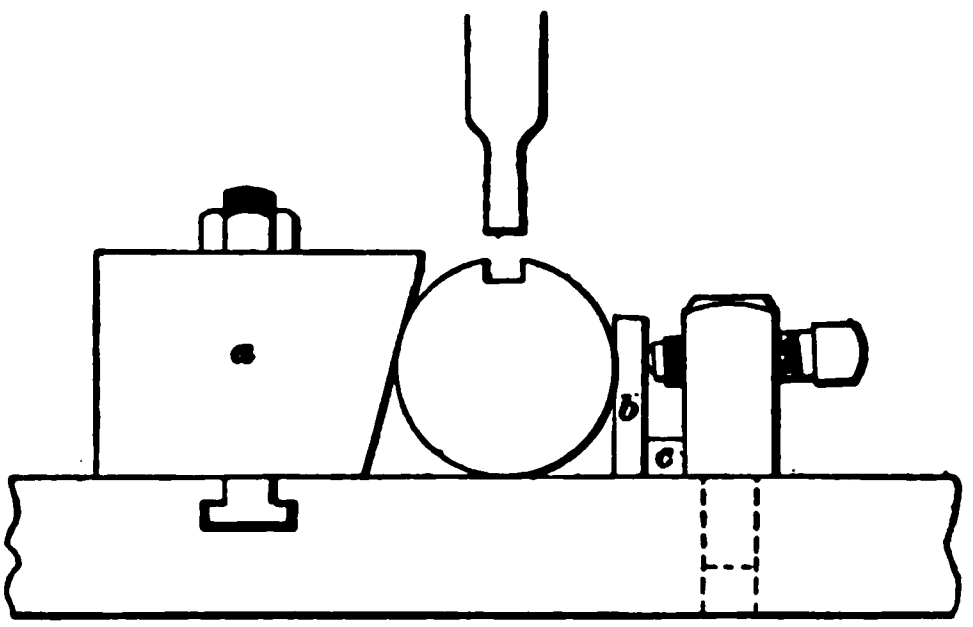

FIG. 27.

when the shaft is pressed against it by the setscrew, it is held down firmly. By this method the shaft is kept straight.

To prevent the points of the setscrews from marring the shaft, a guard piece *b* should be placed in front of each setscrew. When the point of the setscrew is much higher than the axis of the shaft, it may be necessary to put a packing-block *c* between the lower end of the pin and the guard strip. The center of the setscrew should be at least as high as the axis of the work, or slightly above it; otherwise, there will be a tendency for the shaft to rise up when the setscrews are tightened. As the pressure of the cut is considerable, a stop-pin should be placed in front of the shaft.

38. V Blocks.—If a shaft has different diameters, it may not be possible to hold it by the methods described. **V blocks** may then be used for supporting the shaft, as shown in Fig. 28. A number of these blocks are planed exactly alike, and have tongues on the bottom that fit the T slots in the platen and insure correct alinement. These blocks are put on the platen in such positions that the parts of the shaft to be supported that have equal diameters will rest in them.

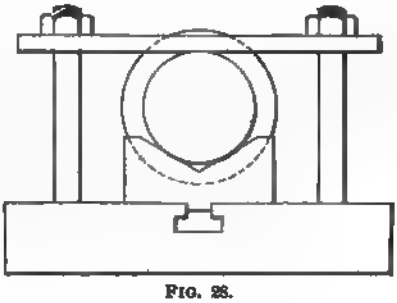

FIG. 28.

PLANER CENTERS.

39. Construction and Use.—Fig. 29 shows a set of **planer centers** used for certain classes of work. These centers are clamped to the platen; tongues on their bottom, which fit the T slots, insure that they are in line with each other and with the line of motion of the platen. The work

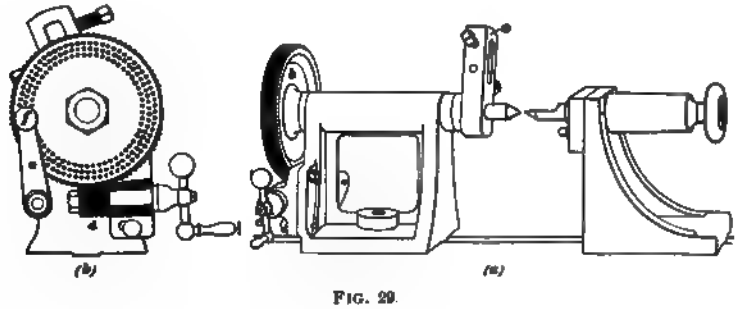

FIG. 29.

is held between them in the same way that it would be held between lathe centers. A dog is fastened to the work and the tail is held in the slot in the arm *a*. Referring to Fig. 29 (*a*), a worm-wheel *b* is shown. This is rigidly fastened to the

headstock spindle; by means of a worm engaging the worm-wheel and a handle *c* fastened to the worm, the headstock spindle may be revolved by hand. The worm *d* is shown clearly in the end view given at (*b*). By examining this end view, it will be noticed that several concentric rows of holes are drilled into the worm-wheel, the holes in each row being spaced equidistant. A movable arm *e* is fastened to the frame of the headstock in such a manner that it can be rigidly clamped. This arm carries on one end a latch pin *f*, which has a small cylindrical projection that fits the holes in the worm-wheel. By means of the holes and latch pin, quite a number of equal divisions of the circle may be obtained.

40. To Find What Divisions Can Be Obtained.—To find if a given number of equal divisions can be obtained with the number of holes in the various rows, use the following rule:

Rule.—*Divide successively the number of holes in each row by the number of parts into which a circle is to be divided. If the quotient is a whole number, the proposed number of parts can be obtained. The quotient, at the same time, is the number of holes of the row found divisible that the worm-wheel must be rotated for each part.*

EXAMPLE.—There being 72, 64, and 56 holes in the three rows on the worm-wheel, can a circle be divided into 14 parts?

SOLUTION.—Dividing 72 by 14, we get $5\frac{2}{14}$ as the quotient. As this is not an integral (whole) number, try the row having 64 holes. Dividing 64 by 14 we get $4\frac{8}{14}$ as the quotient. Since this is not a whole number, try the last row. Dividing 56 by 14, we get 4 as the quotient, which is a whole number. This shows that, by moving the worm-wheel 4 holes at a time in the row having 56 holes, we can obtain 14 equal divisions. Ans.

ANGLE PLATES.

41. How Angle Plates Are Used.—For some classes of work, an **angle plate,** shown at *a* in Fig. 30, is very convenient. This angle plate is planed so that the two

outer surfaces make an angle of 90° with each other. When used, one face is bolted to the platen, as shown in the illustration, and the work is bolted to the side of the angle plate.

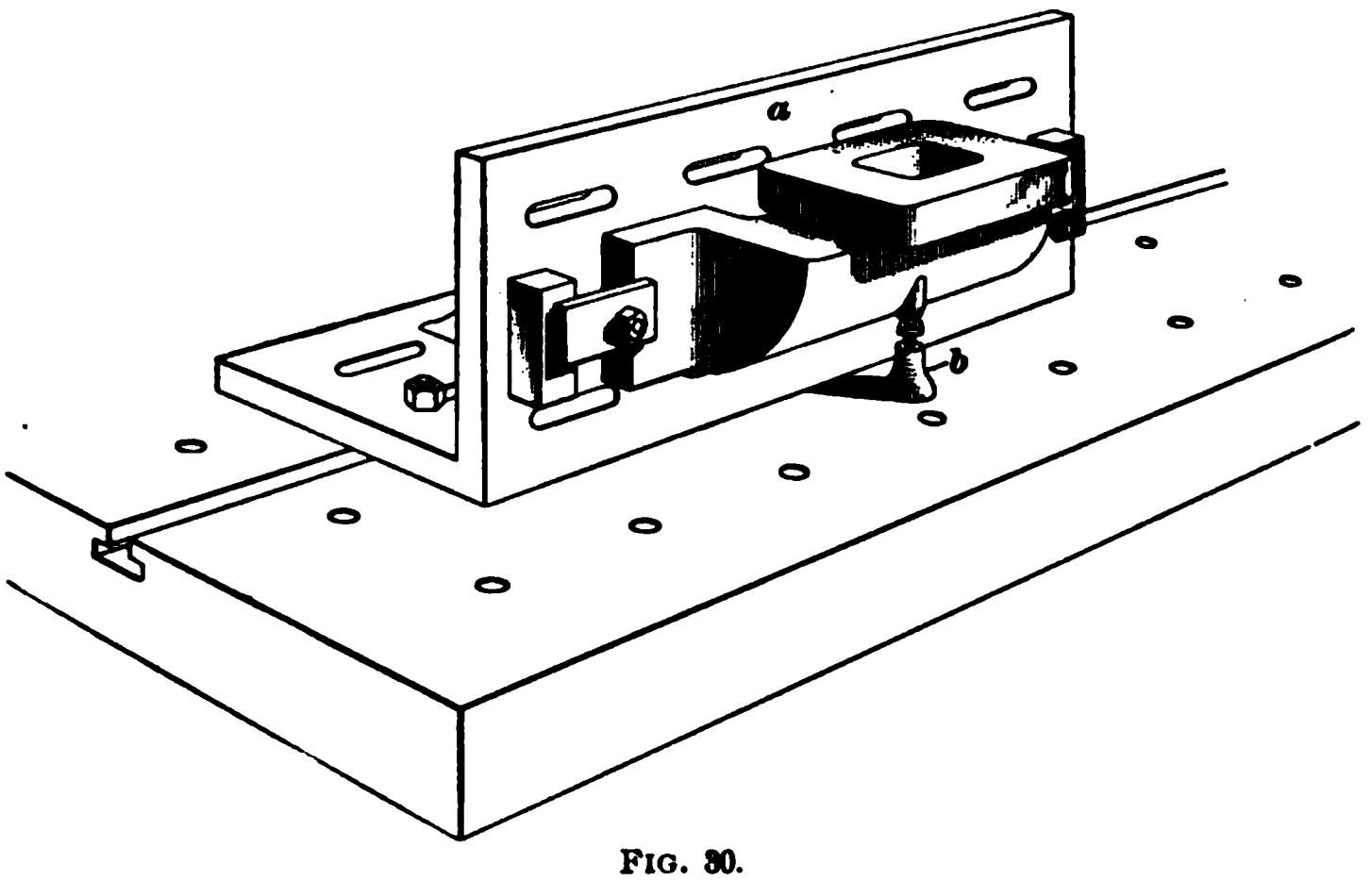

FIG. 30.

When one side of a piece of work has been finished and another side is to be finished square with it, the work is bolted with its finished surface against the angle plate by bolts and clamps, used in the same way as when fastening work to the platen.

42. The angle plate is especially adapted to work where the surface opposite the side to be finished has such a shape that it cannot be conveniently bolted directly to the platen, as occurs, for instance, in the piece shown in the figure. It will be seen that the under side is a curved surface.

43. Planer Jacks.—When the work projects a considerable distance from the angle plate, it should be supported near the free end in order to prevent it from springing away from the cut. **Planer jacks** are very convenient for this purpose; one of these is shown applied at *b* in Fig. 30.

44. One form of a planer jack is shown in Fig. 31. It consists of a base *a* tapped to receive the screw *b*,

through the head of which two holes are drilled at right angles with each other, to admit the adjusting pin shown. A cap *c* is attached to the head by a ball-and-socket joint, to allow the cap to adjust itself to any slight inclination of the surface to which it is applied. The cap may be checkered, as shown, in order to prevent it from slipping. These jacks may be made in various heights to suit conditions.

FIG. 31.

45. To Keep Work From Slipping. — Under a heavy cut there is danger, where two planed surfaces are placed together, that the work will slip. This danger may be lessened by placing a piece of paper between the surfaces before clamping.

CLAMPING BY GLUING.

46. Very thin and flat work that is to be planed all over its top surface cannot be held very readily by toe dogs. If straight clamps are put on top, they must be shifted after part of the surface has been planed. In many cases, however, such work may be held without any clamps at all by a method that for want of a better name may be called **gluing.** The edges of the work, and the platen right around the edges of the work, are carefully cleaned and made fairly bright with coarse emery cloth. Melted rosin is then applied around the edges; this, if the surfaces to which it is applied are absolutely free from grease, will stick surprisingly well to them, and will offer enough resistance to hold the work securely against a light cut. Melted shellac, sealing wax, or pitch may be used instead of the rosin; the rosin is usually easier to obtain and is cheaper. This method of fastening obviates any danger of springing the work in clamping.

SPRING OF THE WORK IN CLAMPING.

47. Flat Bearings.—So far it has been assumed that the face of the work is true, so that it has a large flat surface bearing against the jaw of the chuck or on the planer platen. Such, however, is seldom the case. When the casting or forging is first put on the platen, it rarely touches in more than three points, and when the rough piece is correctly set for the cut, probably not more than one point actually touches the platen, the other points being supported by packing or blocking.

48. Packing Under the Work.—When a clamp is used, there should be a support under the work at that point to prevent springing it. Suppose the piece shown in Fig. 32 is to be clamped to the platen. The piece is crooked on the bottom, so that it touches only at the points *a* and *b*. If clamps be applied at the ends of the work and then tightened, the work will spring down at the ends, bending around its points of support *a* and *b*. If a cut is taken over the

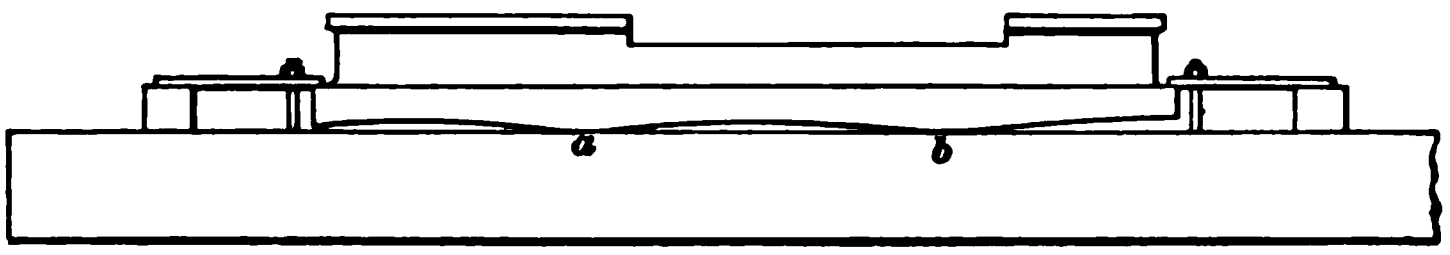

FIG. 32.

work while it is thus sprung, it will be found upon releasing the clamps that it will spring back nearly to its original shape, and, hence, the planed part will no longer be straight. When clamping work that does not touch the platen directly under the clamp, a blocking piece or packing piece should be put under the work at that point, so that when the clamp is tightened, the end cannot spring down. Paper or sheet iron is often used for packing. In many cases, a thin iron or copper wedge is found convenient for packing up and also for setting the work.

CARE IN SETTING THE WORK.

49. Position on the Bed.—When a large piece is to be planed or finished on a number of surfaces, it should be so set that all the surfaces can be finished in their proper relation to each other. The work should be laid out by drawing lines on the various surfaces to indicate the amount of metal that is to be removed. The work is then set to these lines so that all the surfaces can readily be worked upon.

Suppose a lathe bed is to be planed. In this case, the top and bottom parts should be planed parallel. It may be found that the bed is considerably warped and twisted. After the bed is put on the planer, it is leveled up by the use of shims, or wedges, under the ends and sides until it has a fair bearing. For testing the top face of the bed, or the face about to be planed, the surface gauge may be used at the end and along the sides to see that the work averages the same height. When the work is adjusted with the wedges and packing so that the top face appears about level, the clamps are applied, care being taken that they are over the packing pieces.

50. Resetting.—If a piece has been planed true and is turned over on the platen, it may be found that it does not remain true but is slightly warped, so that there is a slight amount of rocking motion when the work rests on the platen. In such cases, the piece should be supported on thin pieces of paper at the four corners. It will be found by pulling the pieces of paper that two are tight and two are loose. More paper should be put under the loose corners until the papers at the four corners are all pinched with the same pressure. When care is used, it is possible to give a very even bearing.

51. Use of a Level.—When a surface that has been removed from the platen after planing is to be set again, it may be set level and tested by the use of the surface gauge. The work is often of such shape that the surface gauge

cannot be used. In such cases, a spirit level may be employed. When the level is used for setting work, the platen should first be tested with it to see that the platen itself is level. Planers should be set so that the platen is level in the direction of its length and width. If the platen is set level, the work may be set by the use of the level.

When the level is not at hand, or cannot be used, a tool may be clamped in the head and adjusted so as to almost touch the work at one corner. The work can then be moved under the tool by moving the machine, preferably by hand, and if there is any unevenness in height, it will be apparent.

SPECIAL JIGS FOR HOLDING WORK.

52. When there are a number of pieces to be finished, it is generally preferable to make a **special jig** for holding the work. By doing this, much time may be saved. In devising special jigs for holding work, the aim should be to hold the work securely and accurately, and at the same time to have the jig so simple that the work may be changed quickly and easily.

53. Planing a Number of Pieces at Once.—Much time can often be saved by setting a number of pieces on the platen so that they will all be planed at the same time. This is especially true when much time is required to adjust the tool to the cut. After it is adjusted to one piece of work, the tool runs the whole length of the table, cutting each piece of work to the desired shape.

Fig. 33 shows very clearly how a number of pieces may be set on the platen at the same time and a number of cuts taken over all of them. In this case, eleven pump frames with cylinders cast on their ends are so arranged that they may all be planed at the same time. Each casting is carefully set and clamped in place, care being taken in setting that the space between them is as small as possible. The planer used has four heads. The two heads on the cross-rail

work on the top of the cylinders, planing the valve seats and the joint for the steam and water chests. On either side, a head is used for squaring down the end for the cylinder heads. All the feeds in this case are automatic.

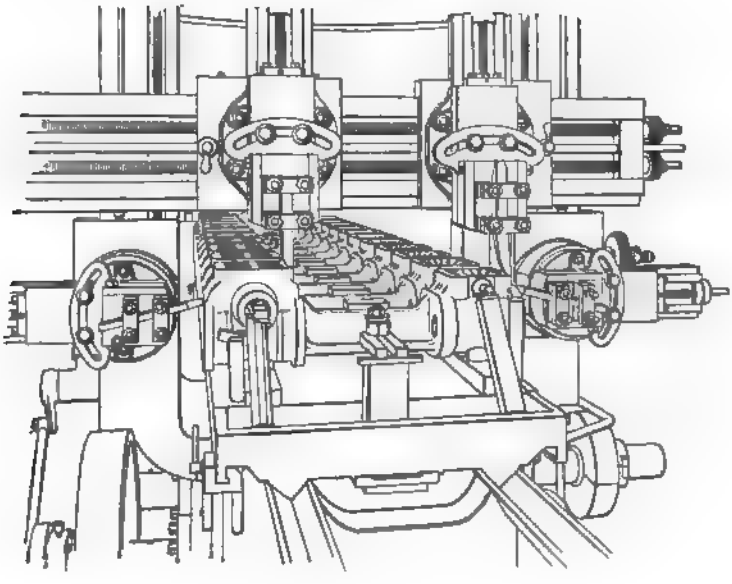

FIG. 33.

54. Special Jacks or Braces for High Work.— Fig. 34 shows two large pillow-blocks for a steam engine supported on the planer while a cut is being taken off their bottom faces. The pieces, being quite high and having narrow bases, have a tendency to tip when a heavy cut is being taken. To avoid this, after the work is set, the **special planer jacks** shown at *a* are employed. This particular form of jack is very convenient for this and similar classes of work. The center portion is a piece of steam pipe with the ends squared. A knuckle joint *b*, with the ends of each part turned so that one end will fit the hole in the planer and the other end fit the inside of the pipe, is used in one end of the jack, while in the other end the threaded stem of the V-shaped block *c* is fitted. The nut *d* on the

stem of the V block is used to lengthen the jack by screwing it against the end of the pipe. The knuckle joint allows the end of the jack to be attached to almost any place on the

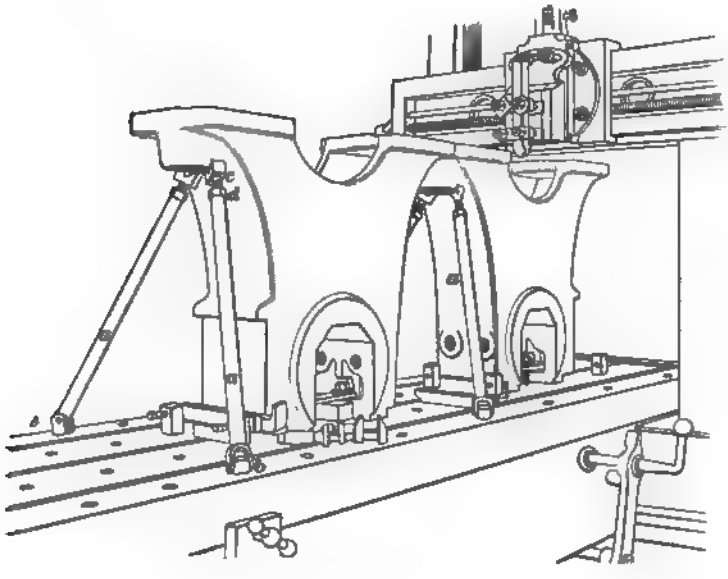

FIG. 34.

platen, and, hence, is very desirable. By using various lengths of pipe, the jacks may be used for a wide range of work.

55. Example of Clamping Heavy Work.—Fig. 35 shows a piece of work that, because of its peculiar shape and great weight, is difficult to hold on the platen without some special device. The two pieces shown are the two parts of the frame that supports the cylinder of a vertical engine. A yoke *a* is here used to support the upper ends of the frames. This yoke is bolted to the platen and the end of the casting rests in it. The flange on the casting keeps it from slipping down, while setscrews *b* at the side of the yoke are used for adjusting the work. The lower end of the casting overhangs the table. It is kept from slipping

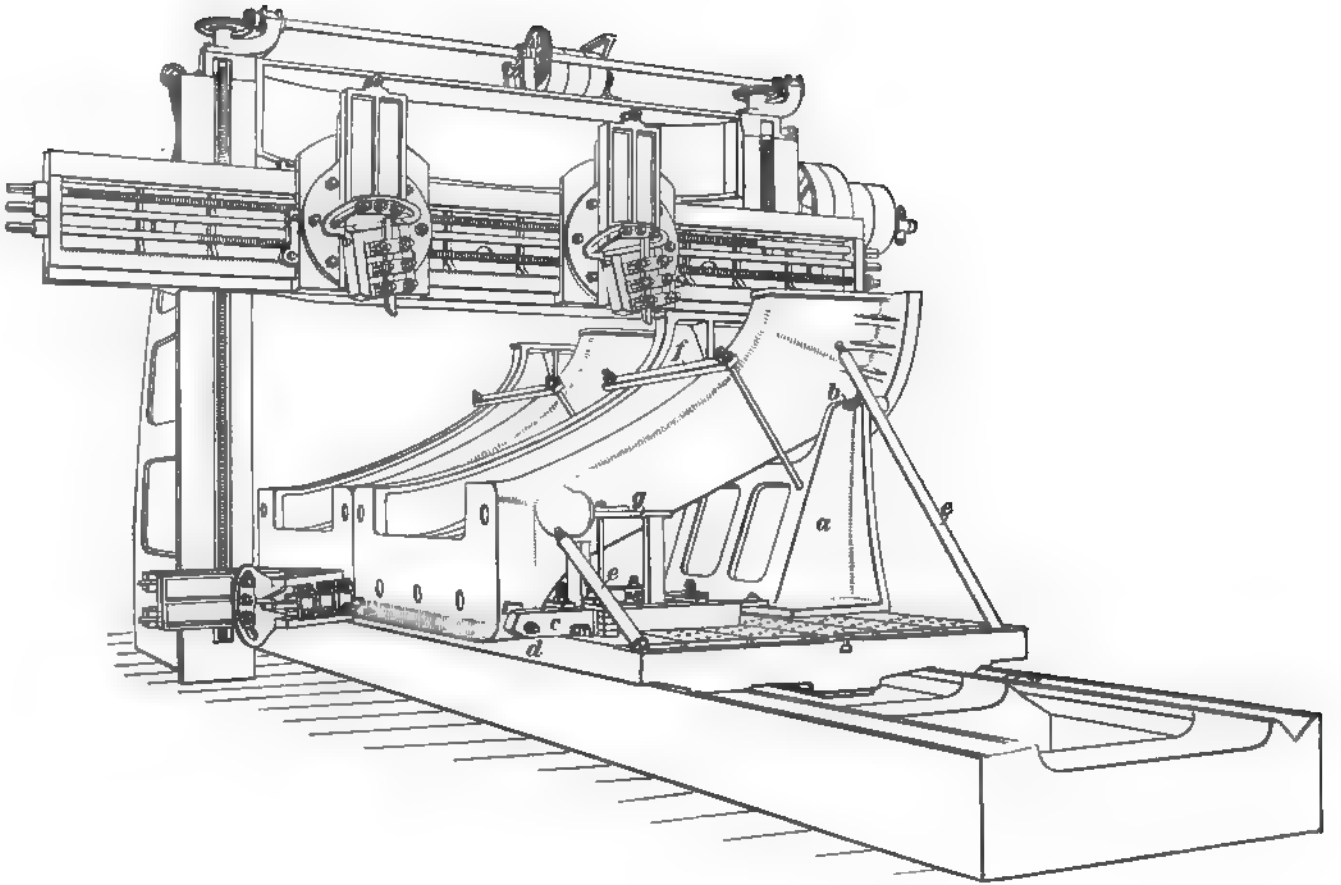

FIG. 36.

along the platen, when a cut is being taken, by the use of a heavy bar *c*, which is bolted to the platen. A setscrew *d* in the end of the bar is used to make slight adjustments when setting the work true. Planer jacks *e*, *e* are also used to keep the work from slipping and tipping. The clamps for holding the work down are shown at *f* and *g*. When such heavy work as this is securely braced and rests fairly on a special fixture or special holding device, its weight helps to hold it down, so that very heavy clamps are not necessary.

TAKING THE CUT.

PLANE SURFACING.

56. The Operation.—When taking a cut over a plane surface, the tool is rigidly clamped to the tool block so that the cutting edge projects as little beyond the tool block as is necessary to reach the work. The cross-rail should be adjusted so that it is as close as practicable to the work that passes under it; after adjusting, it should be clamped rigidly to the housings. The tool is adjusted by the use of the down-feed handle *f*, Fig. 1, so that it will take the desired depth of cut. The tool is usually at first fed to the work by hand, by a feed-screw operated by the handle *h*. After the cut is started by hand, the automatic feed is thrown in.

FEED-MOTION.

57. Action of the Feed-Motion.—The **feed-motion** is operated by the rack *u*, Fig. 1, at the side of the housing, which is connected with the disk *v* at its lower end by a connecting-rod. This connecting-rod is pivoted to a block that slides in a slot cut in the disk *v*; the block is

operated by the screw handle *u*. For each stroke of the planer, the disk makes a partial turn, and the rack will be alternately moved up and down. When the block in the disk is moved to the end of the slot, the rack will have its greatest travel. As the block is moved toward the center of the disk, the amount of throw decreases until the block reaches the center, where it is zero. The amount of throw and the movement of the rack determine the rate of feed.

58. Fig. 36 shows a top view and side view of the details of the feed-motion at the end of the cross-rail. In the top view, the rack *u* is shown in section. This engages with the gear *v*, which is fixed to the shaft *w*. This shaft fits the bearing and passes loosely through the gear *t*. The outer end of the shaft carries the ratchet wheel *x*, which, by reason of being keyed to it, revolves with the shaft. On the side of the gear *t* is a pawl *y*, which engages the ratchet wheel *x*. Gear *t* meshes with gear *s* on the feed-screw. When the rack is moved down, gear *v* revolves, carrying with it the ratchet wheel *x* at the same time. When the pawl *y* is engaged, the wheel *t* is carried forwards; this also turns the gear *s* and the feed-screw. When the rack *u* moves upwards again, it turns the gear *v* back, but the pawl *y* slips over the ratchet wheel *x*; consequently, the feed-screw remains at rest. With the next stroke of the machine, a similar movement occurs To reverse the direction of the feed-motion, the pawl is reversed so that its opposite end catches in the ratchet wheel *x*. The feed may be stopped entirely by setting the pawl in mid-position, so that neither end engages the ratchet wheel.

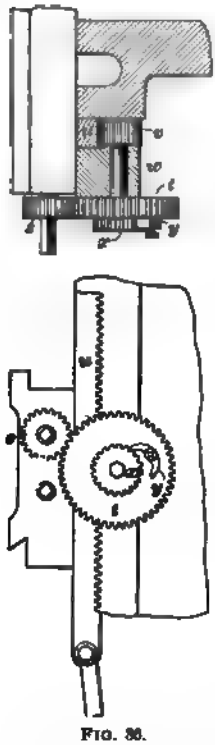

FIG. 36.

PLANER TOOLS.

59. The Cutting Principle.—In the case of planer tools, the principles underlying the cutting operation do not differ from those of lathe tools. The shape of the tool varies, and is determined by the kind of metal being cut, the hardness of the metal, and whether a rough or a finishing cut is being taken.

60. Angles of Rake and Clearance.—Fig. 37 shows a common form of planer tool. The **angles of rake and clearance** are determined as follows: Through the point *o* of the tool, Fig. 37 (*a*), draw the line *a b* parallel to the shank of the tool; at *o* draw the line *c d* perpendicular to *a b*. Angle *d o f* then is the angle of front rake or clearance. The line *a b* in this case coincides with the top face of the tool; this shows that it is without top front rake. Fig. 37 (*b*) shows a bottom view of the tool. The line *g h* is drawn at right angles to the line of motion of the platen, and the line *k i* is drawn tangent to the front face of the tool; the angle *h v i*, then, is the side rake.

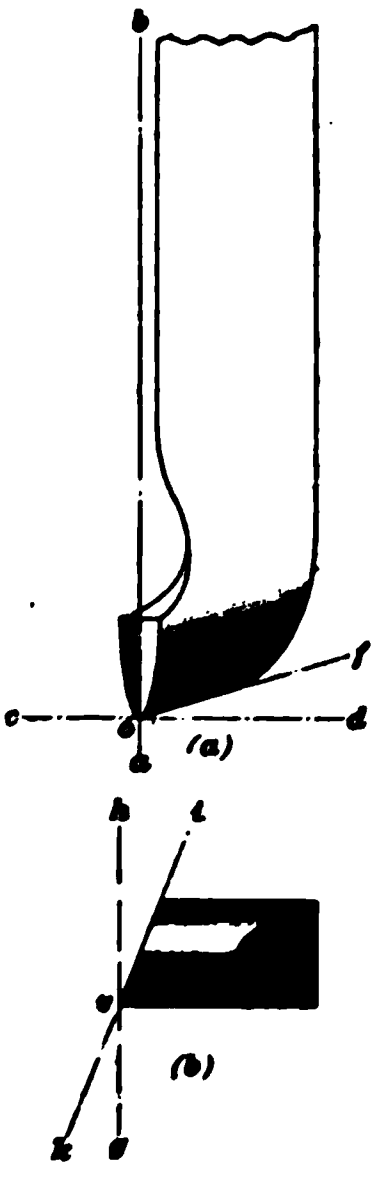

FIG. 37.

61. Constant Angles of Clearance.—It will be seen that the angle of front rake or clearance cannot be varied by setting the tool at different heights relative to the work, as is the case with lathe work. With the planer, the shank of the tool is always in a plane perpendicular to the platen, and whatever angle of clearance is given the tool in forging or grinding remains constant. The position of the tool relative to the work corresponds to that of a lathe tool when the point is set level with the center. Tools for the planer are therefore forged with from 3° to 5° of clearance.

62. Keenness and Strength.—The keenness of the tool depends largely on the angles of top front rake and top side rake. The strength of the tool depends on its angle of clearance and the angles of top rake.

FIG. 38.

63. Tools for Iron and Steel.—Tools for wrought iron and steel are generally given more keenness than those used for cast iron. It will be noticed, by referring to Fig. 37, that the tool there shown has no top front rake, the keenness being given by increasing the angle of top side rake. This tool is adapted to roughing cuts. For finishing cuts on cast iron, a broad square-nosed tool is used, made as shown in Fig. 38. For wrought iron or steel, the point is flat but much narrower.

ROUGHING AND FINISHING CUTS.

64. Depth of Cut.—In planer work, as in lathe work, **roughing and finishing cuts** are taken. The first cuts are made deep, and the feed is consequently fine when compared with the finishing cut. It should, however, be as heavy as the tool will stand without heating and as great as the machine will drive without danger of springing or bending the work.

65. Feeds for Different Metals.—Finishing cuts should always be light, but the feed depends on the metal being cut. Wrought iron and steel usually require narrow feeds for finishing. Cast iron can be finished with a very broad tool and, consequently, a feed nearly equal to the width of the tool.

66. Chipping the Edge of the Work.—When taking a roughing cut, there is a tendency for the tool to break

off the edge of the work just as the tool is leaving it. This breaking of the edge often runs much below the finished surface, and causes a bad appearance of the work. It may be avoided by beveling the edge of the work, as shown at *b* in Fig. 39. The bevel starts at the line that indicates the depth of cut and runs back at an angle of about 45°. When the tool comes to the beveled edge, the force of the cut begins to decrease, so that by the time the tool reaches the edge of the cut, there is little tendency to break the edge.

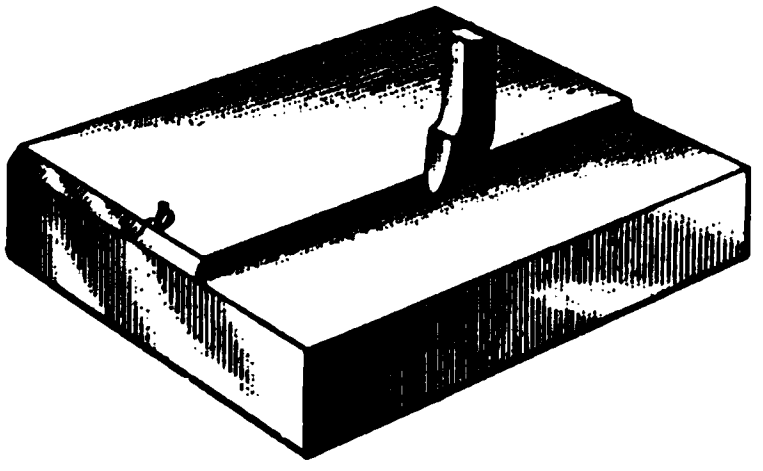

FIG. 39.

SIDE CUTS, OR DOWN CUTS.

67. Operation.—Suppose it is desired to finish the sides of a piece square with the finished top. This may be done by using a properly shaped tool and feeding it down over the sides of the work. Fig. 40 shows, fastened to the platen, a piece of work that has its top face *a* finished. It is desired to finish the sides *b* and *c* square with the finished face *a*. A bent, round-nosed tool, shown at *t*, may be used for this purpose. It is set in the tool block so that its edge extends far enough beyond the tool clamps to pass entirely over the cut before the tool block reaches the work.

68. The Tool Block.—When a down cut is to be made, it is necessary to swing the **tool block** to one side. It will be seen, by reference to Fig. 1, that the tool block and clamps are pivoted on a pin *w* in the head. A section of the head is given in Fig. 41. When the tool is cutting, the pressure of the cut holds the block *a* in its seat. When the pressure of the cut is released by the work running back, the point of the tool is free. Since the tool and the block move about the pin *w*, the point of the tool swings in an arc of a circle, as indicated by the dotted line *A B*. This

allows the point of the tool to lift from the work when it is not cutting, thus avoiding the danger of breaking the point. This applies to finishing plane horizontal surfaces.

69. Swing of the Tool.—When cutting a side face, the tool tends to rise, the same as when cutting horizontal

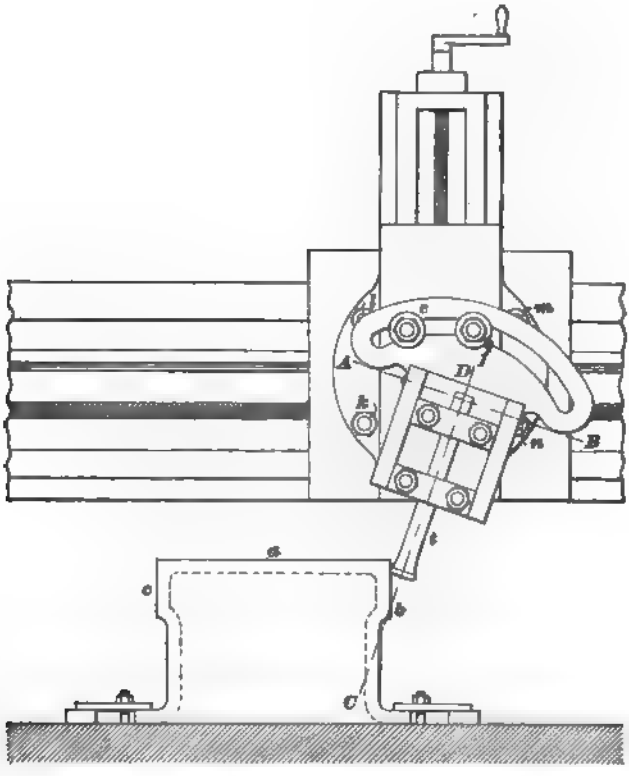

FIG. 40.

surfaces; but since the swing of the tool point and the face of the work are in the same vertical plane, the tool point will rub against the work instead of swinging away from it. By loosening the bolts *e* and *f*, Fig. 40, and swinging the tool block so that the pin is inclined, as shown by the line *A B*, the tool point as it lifts will swing in a plane at right angles

to the line of the pin *A B*, or in the plane *C D*. This plane *C D* is at an angle to the face *b* of the work; hence as soon as the point of the tool lifts on the backward stroke, it begins to swing away from the face of the work.

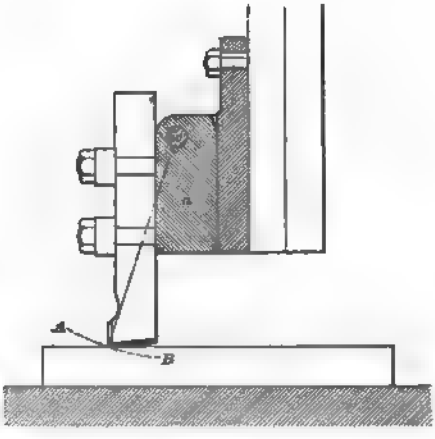

FIG. 41.

70. When planing a surface on the opposite side of the work, as the surface *c*, the tool block must be swiveled in a direction opposite to that shown in Fig. 40. If a cut should be attempted on the surface *c* with the block swung as shown in the figure, the result would be that when the work runs back and the tool begins to lift, it would swing into the work deeper and deeper as it lifted, thus catching in the work and doing damage. When taking a down cut with an ordinary forged tool, there is a tendency for it to spring away considerably from the cut, much the same as a long boring tool on a lathe. Whenever possible, the tool should be made very heavy and rigid to avoid this.

71. Testing the Squareness of the Head.—When making down cuts that are intended to be square with the top face of the platen, the down-feed slide of the head should be examined to see that it is perpendicular with the platen. This slide, or head, is on a swiveled base clamped to the saddle. It can usually be swung around to make any angle with a position perpendicular to the platen. The base is graduated; when set perpendicular, two zero marks come together. If the head is not set perpendicular, it may be loosened by

unclamping the four nuts *k*, *l*, *m*, and *n*, Fig. 40; it is then adjusted to the correct position and clamped again. The squareness of the head and the truth of the work are assured by proceeding in the following manner: A finishing cut is taken over the surface *a*, Fig. 40, and a side tool substituted and a finishing cut taken down the face or side *b*. A try square is applied to the two finished surfaces, and if *b* is not square with *a*, the vertical slide is adjusted and trial cuts made until *b* does come square with *a*.

CUTTING BEVELS.

72. Swinging the Head.—When a beveled cut, that is, a cut at any other angle to the surface of the platen than 90°, is to be made, the head is swung around so that the

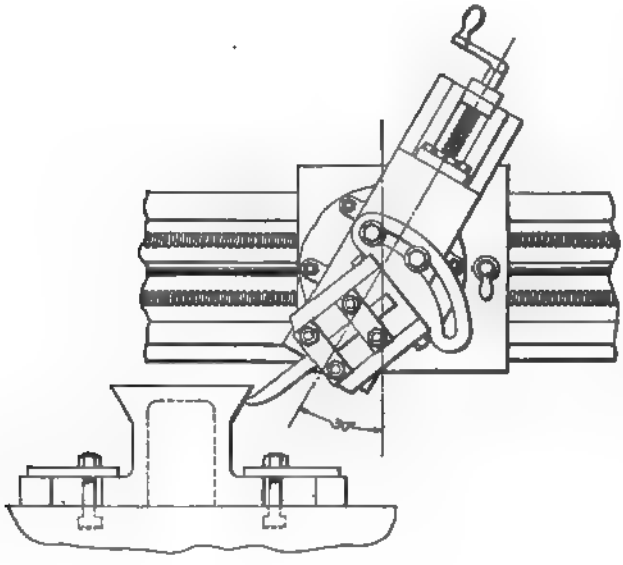

FIG. 42.

line of down feed makes the desired angle with the table. Suppose it is desired to bevel a piece at an angle of 60° with the top of the platen. Then, as the zero marks coincide

when the down feed is at an angle of 90° to the platen, the head must be set to 90° − 60° = 30° in order to make an angle of 60° with the surface of the platen, as shown in Fig. 42.

Some planers are graduated with 0° at the sides and 90° at the top, while others have 0° at the top and 90° at the sides. On this account, care must be taken to be sure that the proper angle with the surface of the platen is obtained.

When cutting bevels, the tool block must be swung around, as shown in Fig 42. A very easy rule to remember as to the way the tool block should be swung when making side cuts or under cuts is the following:

Rule.—*Always swing the top of the tool block* **away** *from the plane of the surface to be planed.*

73. Attention is here called to the fact that in making down cuts, especially in roughing cuts, the tool should invariably be fed *downwards* while cutting, but never *upwards*. On a fine finishing cut, this is not so essential. The reason for this is that when feeding upwards, the tool, during the backward motion of the work, is liable to catch in the work before it has time to swing clear of the latter.

VARIOUS SHAPES OF PLANER TOOLS.

74. Forged Roughing Tool.—The ordinary form of planer tool is forged from the bar. These tools are given various degrees of rake and clearance, depending on the hardness of the work and the nature of the cut. When the cuts to be taken are very heavy, the roughing tool is usually beveled at the cutting edge, as shown in Fig. 43. Here the cutting is done entirely along the edge tangent to the line *A B*; the edge tangent to *C D* nearly coincides with

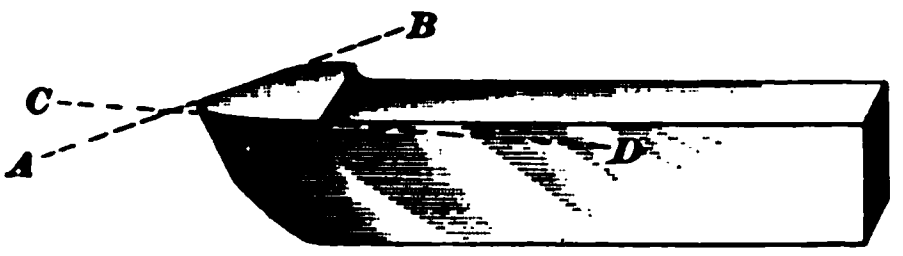

FIG. 43.

the shank of the tool. This same style of tool with the point bent to one side is used for a right-hand or left-hand side tool, depending on the direction of the bend.

75. Forged Straight-edged Side Tool.—Fig. 44 (*a*) shows a form of side tool for heavy work. The tool is forged thin along its cutting edge *A B* and tapers so that it is thick at the back, to give it strength. The side face *c* is ground straight and with enough clearance so that the tool can be made to cut along its entire edge. It will be noticed that the line of the cutting edge *A B* slopes from the shank

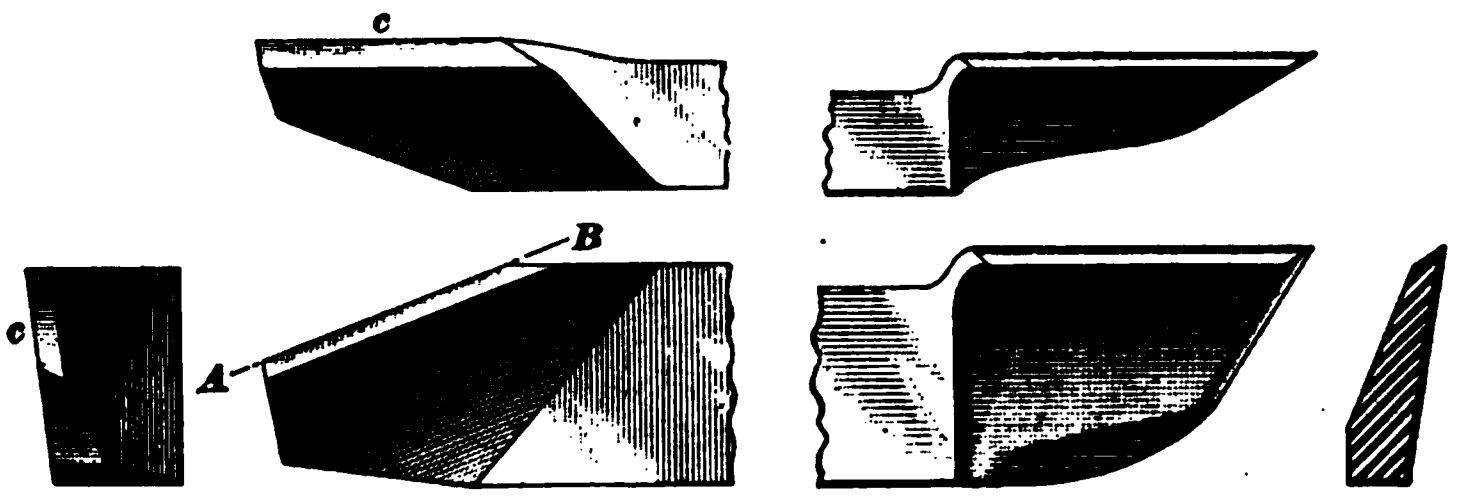

FIG. 44.

of the tool. This is desirable, as it gives less shock to the tool and the work when starting a cut. When the edge starts to cut the work, it begins gently near the corner *B* and the width of cut gradually increases until a full cut is being taken. At the end of the stroke, the tool gradually runs out of the cut with the same ease. Another advantage of the sloping edge is that the cut has a shearing action that tends to push the work down on the platen, so that there is less danger of the work slipping. Fig. 44 (*b*) shows a side tool for finishing work and for planing in confined positions.

76. Tool Holders.—For many classes of planer work, it is possible to use **special tool holders** with inserted blades, which will take the place of the more costly solid forged tools. The self-hardening steel gives excellent results on planer work, especially for roughing cuts.

Various forms of tool holders have been devised. Those with stiff shanks, which hold the blade very rigidly, give the best satisfaction. Fig. 45 shows a common form of planer tool holder. With this style of holder, the blade may be set in line with the shank for flat surfaces, or it may be turned to either side for right-hand or left-hand side cutting. In many cases, it is well to reverse the tool, so that the shank is *in advance* of the blade. This is done to avoid the danger of the tool springing into the work or chattering, which is likely to occur when the cutting edge is in advance of the point of support, or when the cutting edge is broad.

FIG. 45.

77. Spring of Planer Tools.—In ordinary planer tools, there is quite a tendency for the tool to spring more or less into the work as it bends. It may be seen in Fig. 46 that as the tool bends about the point *a*, the point of the tool follows the arc *A B* of a circle

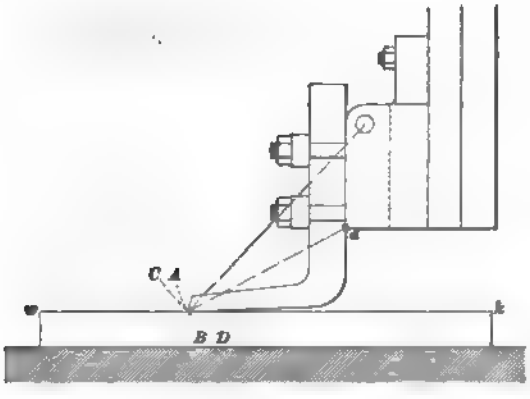

FIG. 46.

struck from *a* as a center. This arc cuts quite deeply into the work. If the tool is shaped as in Fig. 46, where the cutting edge is considerably in advance of the point of support, the tendency to spring into the work is greatest; it becomes less

as the cutting edge is brought nearer to the point of support. This tendency to spring in or chatter is more or less overcome by the use of underhung tools shown in Fig. 47. In this tool, the shank is bent so that the cutting edge comes nearly under the point of support *a*. When this tool bends or springs, its point follows in the arc *A B* of a circle struck from *a* as a center; this circle is tangent to the surface of the work at the point of the tool. Any tendency to

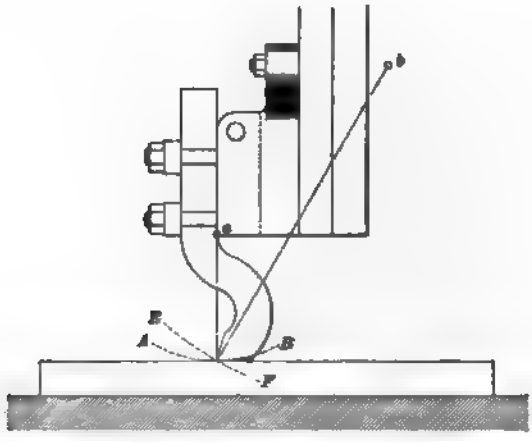

FIG. 47.

spring into the work with such a tool as this is due to the looseness of the saddle on the cross-rail and on the slide. Such a looseness would cause the whole head to spring about a center very near the location of point *b*. When the head springs about this point as a center, the tool again has a tendency to spring into the work by following in the arc *E F* of a circle struck from *b* as a center.

78. It is not uncommon to find a tool made in the shape shown in Fig. 48 for the purpose of extending the good qualities of the underhung tool sufficiently to overcome all tendency to spring into the work. As the tool bends about the point *a*, it at once springs away from the work, and, by having the cutting edge so far back that it comes more

nearly under the point *b*, the point of spring of the head, the tool will not spring into the work. This tool will work all right on the forward cut, but when the planer is reversed, the tool and tool block tend to lift and swing about the

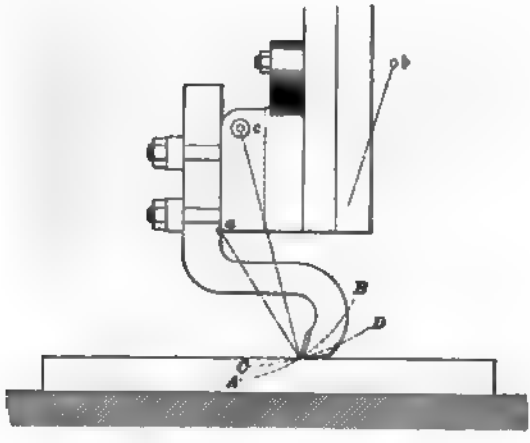

FIG. 48.

point *c*. This at once gives trouble, since the tool point must follow the arc *C D* struck from *c* as a center, moving from *D* toward *C* and thus pressing the point of the tool into the work until it is broken off. This difficulty may be overcome by lifting up the tool block on the return stroke.

79. Special Forms of Finishing Tools.—Fig. 49 shows three forming tools with underhung blades for finishing cast iron. Fig. 49 (*a*) is used for finishing a very broad, flat surface and a rounded corner at the same time; *b c* is the cutting edge. The large shank *d* is held in the tool clamp; the blade *a* is bolted to the shank with capscrews. In Fig. 49 (*b*) the blade *a* is fastened by a single capscrew, so that the blade may be rotated. As soon as one edge becomes dull, the blade may be given a quarter turn on the holder, thus presenting a sharp edge to the work, so that, when the tool is once sharpened, all four edges may be used before resharpening becomes necessary. Fig. 49 (*c*) shows the same

style of tool with a circular cutter used for forming circular grooves. This cutter may also be rotated on the clamping bolt, so that after a part of the edge has become dull, a partial turn of the cutter will present a sharp edge to

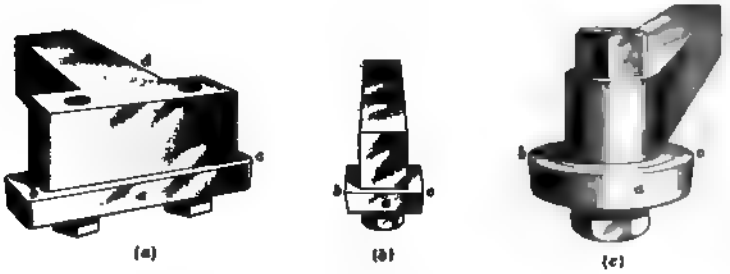

FIG. 49.

the work. This form of circular cutter is easily made by turning it in the lathe. After it is hardened, it may be sharpened on the grinding machine, revolving it upon an arbor. With this style of tool, cutter blades of any irregular outline may be used for forming work.

MAKING UNDERCUTS.

80. Spring of the Tool.—When making undercuts, or when cutting T slots, the results of the springing of the tool are reversed In Fig. 46 it was shown that when the tool bent, it sprung down into the work, the top of which is represented by the line *w k*. If this line is assumed to represent the under surface of a piece of work, it will be seen that during a cut when the tool springs down in the arc *A B*, it will spring away from the work, and on the return stroke the tool block will lift and swing the point of the tool in the arc *C D*, thus throwing the tool into the work and causing it to catch and lift the work off the table, or break the tool.

81. Blocking the Tool.—When an ordinary bent tool is used for undercutting, the tool must be blocked so that it

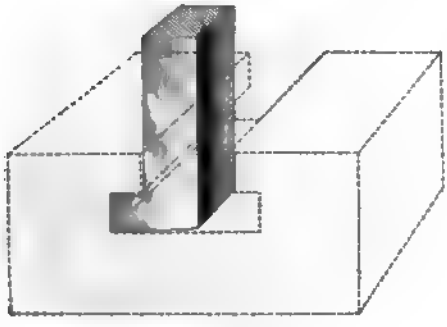

FIG. 50.

will not spring back on the return stroke. This may be accomplished by having the shank of the tool long enough that a block may be driven between it and the head; this will keep the point from rising.

82. Cutting T Slots.—When cutting T slots, a tool made as shown in Fig. 50 may be used; the tool must then be blocked in some convenient way to prevent it from rising during the backward stroke. Instead of blocking the tool, it is better to make the stroke of the planer long enough so that the tool will pass some distance out of the slot at each end. When the machine is on the return stroke, the tool may be held up by swinging the tool block upwards to allow the tool to pass over the work; the tool is dropped again at the beginning of the next stroke.

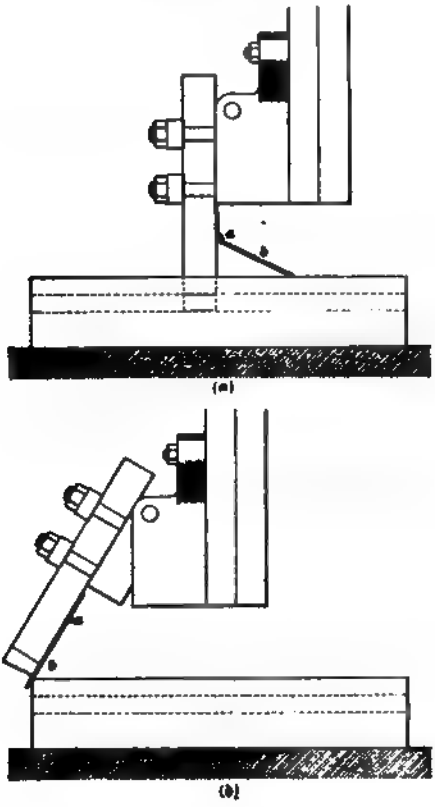

FIG. 51.

686266

A simple device to take the place of the hand for holding the tool up is shown in Fig. 51. Two pieces of sheet metal are hinged together at *a*; one piece is fastened to the tool and the other piece *b* is left free to swing. When a cut is being taken, the loose end *b* drags on the work, as shown in Fig. 51 (*a*). As soon as the tool and the hinged part *b* pass by the work, the part *b* drops down. On the return stroke, it strikes the end of the work and lifts the tool up, as shown in Fig. 51 (*b*), so that it drags over the top. When the cut again starts, the tool enters the slot while part *b* drags over the work as before.

83. Special Tool for Undercuts.—For some heavy undercutting, a heavy bar is clamped in the tool clamp. This bar is fitted with a special tool block at its lower end, which carries a small tool and is so arranged that, at the backward stroke of the planer, it allows the tool to spring away from the cut. The side heads usually answer much better for undercutting and also for side facing.

PLANER, SHAPER, AND SLOTTER WORK.

(PART 2.)

WORK OF THE PLANER.

CUTTING SPEED OF THE PLANER.

1. Limit of Speed.—The cutting speed of planer tools is governed by the same laws that govern the speed of lathe tools. The speed must not be so high as to cause the tool to heat and to become dull too quickly. It should vary with the hardness of the metal cut, the kind of metal, and with the kind of cut, that is, it should in general be slower for a roughing cut than for a finishing cut.

2. Constant Speed.—With the ordinary planer, there is no way of varying the cutting speed after it has once been determined and the machine has been erected. In belting a new planer, a cutting speed is selected that is slow enough for very hard metals and heavy cuts, and ever after the planer must run at that same slow speed, whether it be used for planing steel or for finishing a brass casting. This puts the planer at a disadvantage. In order to make planers suitable for hard metal and heavy cuts, they are usually belted to run at a speed of from 18 to 20 feet per minute.

Copyright, 1901, by THE COLLIERY ENGINEER COMPANY.
Entered at Stationers' Hall, London.
All rights reserved.

3. Variable Speed.—When a **variable-speed** device can be applied to the planer, so that the speed may be readily changed to accommodate the varying conditions, it causes a very great saving in time on many classes of work.

4. One style of a variable-speed countershaft is shown in Fig. 1. A rectangular frame supports two parallel shafts *a* and *b*. Each shaft is fitted with two cones *c*, *c* and *d*, *d*, which are forced to rotate with the shafts, but can be moved along them. The apexes of the cones are toward each other. The cones are held in position by means of the

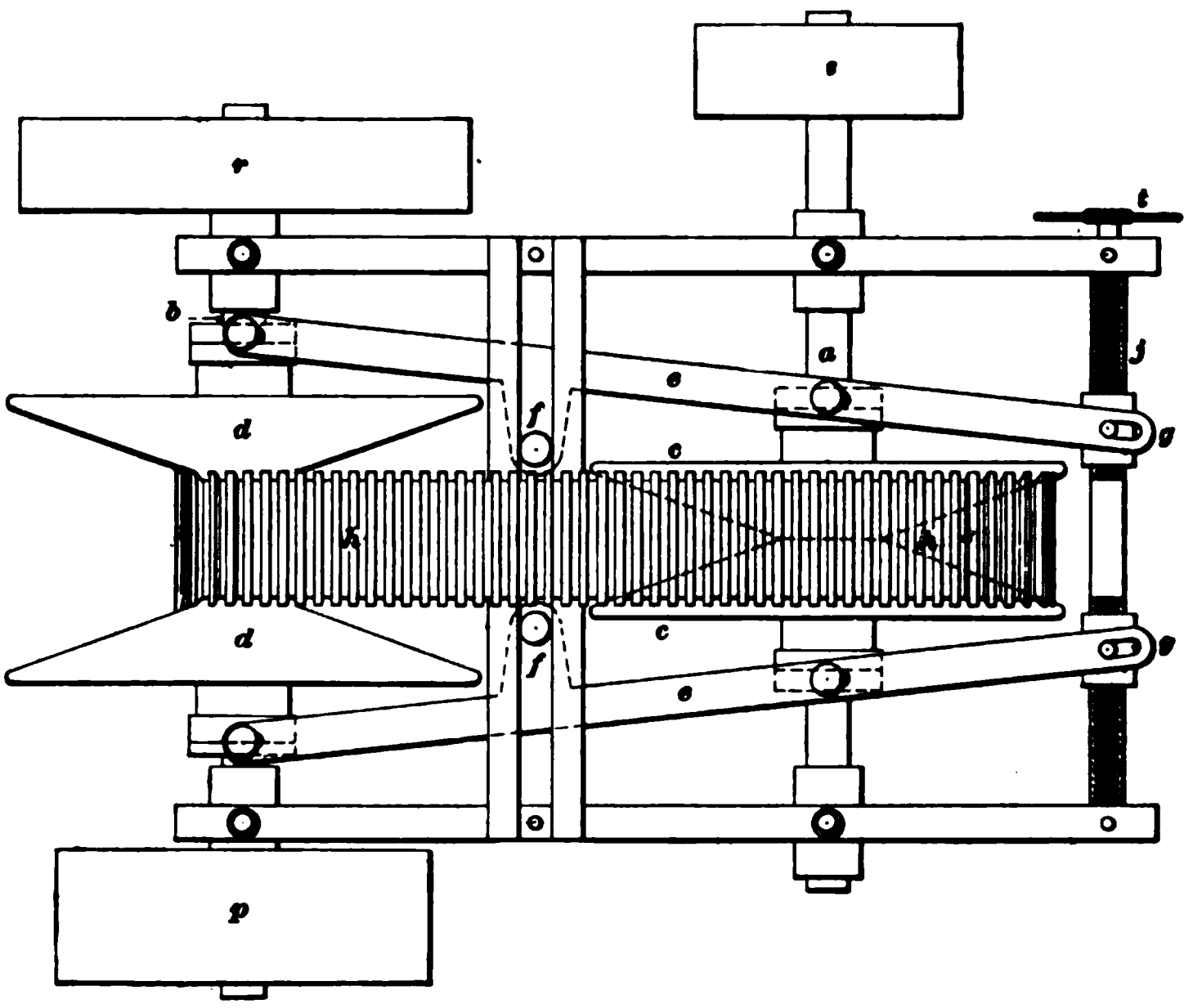

FIG. 1.

bars *e*, *e*, which are pivoted to the frame at the points *f*, *f*. When these bars are placed with their ends *g*, *g* in the position shown in the figure, the two cones *c*, *c* on the shaft *a* are moved together, while the cones *d*, *d* on the shaft *b* are moved apart. An endless belt *h h* runs between these cones and transmits power from one shaft to the other. This belt is kept from squeezing down between the cones by blocks

of wood fastened across the belt. Power from the line shaft is transmitted by a belt to the pulley *p*, which drives the shaft *b* and the cones *d*, *d*. When in the position shown, that is, when the cones *d*, *d* are far apart on the shaft *b*, the belt *h* is quite close to the shaft. Consequently, the belt is driven at a slow rate of speed, or just as if it were mounted on a small driving pulley. The cones *c*, *c* on the shaft *a* are close together, and the belt *h* takes a position near their

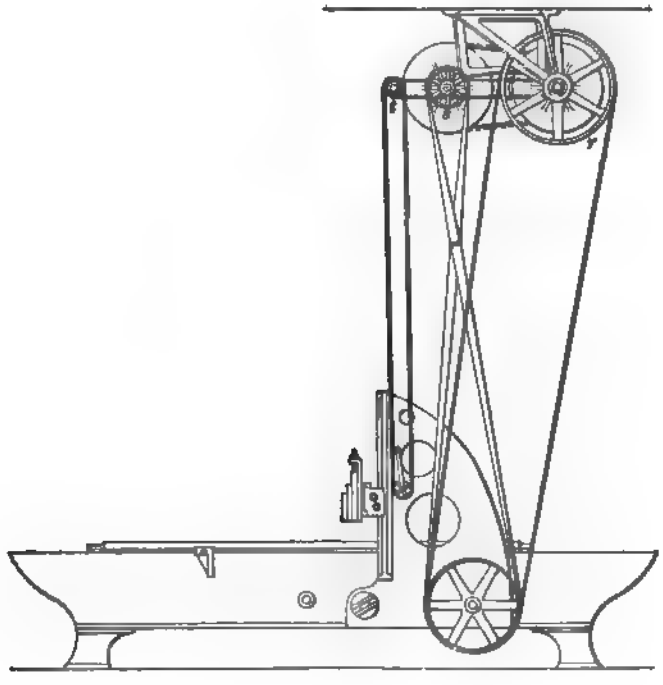

FIG. 2.

circumference. In consequence of this, the shaft *a* will be driven at a lower speed than the shaft *b*. Now, let the cones *c*, *c* be moved apart. This operation brings the cones *d*, *d* nearer to each other, and the belt *h* will come nearer the center of the shaft *a* and will move farther away from the center of the shaft *b*. This causes the shaft *a* to revolve faster.

5. A variable-speed countershaft, applied to a planer, is shown in Fig. 2. The reversing pulley *r*, Figs. 1 and 2, is put on the constant-speed shaft *b*, Fig. 1, thus giving a constant-speed return motion to the planer. The driving pulley *s*, Figs. 1 and 2, for the forward motion of the planer, is on the variable-speed shaft *a*, Fig. 1. The sprocket wheel *t*, which is operated from below with a link chain, is fastened to a right-and-left-hand screw *j*, Fig. 1, by means of which the bars *e*, *e* are rotated about *f*, *f* in order to obtain any desired rate of speed. With this device, it is possible to adjust the speed of a planer to suit the conditions of work, as is done in lathe work. In some cases a planer is driven by a pair of cone pulleys, which afford several changes of speed.

ACCURACY OF PLANER WORK.

6. Erecting a Planer.—In erecting a new planer, it should be set on a brick or stone foundation; the platen should be removed, and the bed carefully leveled by testing the V guides. Care should be taken that the ends of the bed rest fairly on the foundation, so that there will be no tendency to twist the bed or put it in wind, as it is called. If the planer is well set at first, it will remain true for a long time.

7. Error in the Platen.—When a planer is used, the platen is, in course of time, sprung more or less out of true by driving in stop-pins, the careless handling of work, and the general hammering that the top of a platen will receive. All these abuses tend to peen the top of the platen; this tends to stretch it and often causes it to spring up considerably in the middle. When the platen springs up in the middle, it bears only on its ends, and, when taking a long cut where the end of the platen runs over the end of the bed, it allows the ends of the platen to drop down. It may be seen that when this occurs, it is impossible to plane work straight and true.

In such a case, the platen should have a light cut taken over its top surface to make it true. When taking a cut to

true a platen, the first cut should never be deep enough to cut its entire length. It is better to take a number of light cuts for the following reason: If a heavy cut is taken at the beginning, it will be found, as the cut proceeds, that the tension in the top of the platen is gradually released and that the platen will slowly spring back to its natural shape, so that by the time the cut has been fed across, the platen has sprung back to its original shape and the front edge, which was made straight at the beginning, will be found to be concave. Another light cut will be necessary to finish the platen straight and true.

Before taking a cut over a planer table, the cross-rail should be tested for alinement with the ways, and if not in perfect condition it should be adjusted to the ways and not to the table. This always insures the accuracy of angles and parallelism of work done on the machine.

8. Error in the Cross-Rail.—Before a planer platen is trued by planing, the cross-rail should be tested to see if it is level and parallel with the platen. The cross-rail is raised or lowered, and kept level by the elevating screws in the housings. These screws have the same pitch, so that when the cross-rail is moved, each end moves the same amount; the cross-rail is thus kept parallel with the bed. It sometimes happens that heavy cuts are taken when the cross-rail is not securely clamped to the housings; a strain is then brought upon the elevating screws and the nuts, which throws the cross-rail out of adjustment. When the cross-rail is not parallel to the platen, it will cause the work to be planed thicker at one edge than at the other. The cross-rail may be easily tested by adjusting a tool in the head so that the tool just touches the top of the platen at one edge; by moving the head across the platen, any lack of parallelism may be detected. In this same way, the platen may also be tested at various points along its length by moving it by hand to various positions and running the tool across. It will be understood that the setting of the tool must not be disturbed while testing the platen.

9. Spring of Machine.—In some of the old designs of planers, the bed and housings were exceedingly light when compared with the rigidity of design shown in the modern planer. With the modern planer in good adjustment, there is little danger of error due to the distortion or spring of the machine, at least when taking light finishing cuts. If the cross-rail or the head is loose, there is danger of the tool springing into the work.

10. Spring of Work Due to Clamping.—The greatest error is usually due to the spring of the work, which is not only caused by improper clamping, but also by the releasing of internal stresses that have been set up in casting or forging. This point is here again emphasized, as a serious distortion of the work may be produced with very slight pressure.

11. Spring of Work Due to Its Weight. — The weight itself of the piece is often sufficient to cause a considerable deflection. Suppose a long cast-iron piece similar in shape to the bed of the planer, as, for instance, that shown in Fig. 3, is supported only at its two ends. Assume that the clamps are applied carefully, so that the work is not sprung in clamping, but that the piece is left unsupported at the center. Then, the weight of the work in this case will cause it

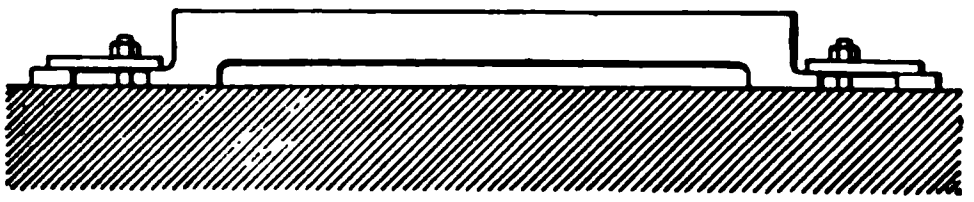

FIG. 3.

to bend down considerably in the center. When the tool presses on the top in taking a cut, the pressure of the tool will still further press the center of the work downwards. The result will be that if the piece is turned over on its side, it will be relieved of the weight that tended to deflect it; the finished face will then be found to be far from straight. In such a case as this, jacks or supports should be put under the work to support it throughout its length.

12. Internal Stresses.—Another source of error that prevents a planer from planing a straight surface is that which arises in cast or forged work from the releasing of **internal stresses**; these stresses are created in castings and forgings by uneven cooling of the pieces. There is a surface tension in the skin, or scale, of the casting or forging, and usually there also exist local stresses, due to uneven hammering or cooling of the piece, which tend to warp it out of shape. These stresses usually act in different directions, with the result that when one is removed, the remaining stresses cause the piece to change slightly in shape. The action of these internal stresses manifests itself very strongly when finishing a long, thin casting to be straight and parallel.

Suppose a casting is straight, so that when it is laid on the platen it has a fair bearing. Suppose it is clamped carefully and a cut is taken over the top so that it is straight. Upon removing the clamps, the piece may spring up in the center, as shown somewhat exaggerated in Fig. 4 (*a*).

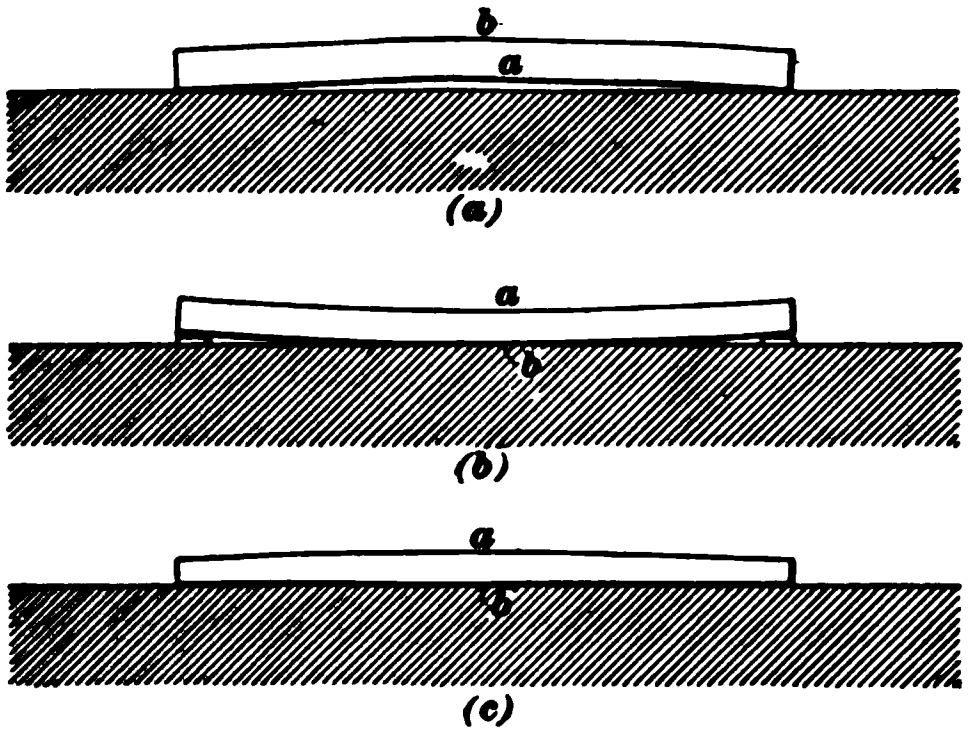

FIG. 4.

Before the piece was planed, the surface tension in the two sides *a* and *b* was about equal; consequently, the piece remained straight. Upon taking a cut over one side, as *b*, part of the surface was removed and, consequently, a part of the surface tension was relieved. The side *a* being now under the

greater surface tension, the result is a bending of the work, as shown. If the piece is turned over, as shown in Fig. 4 (*b*), and carefully clamped with pieces under the ends, so that it will not be sprung in clamping, and if a cut is now taken over the surface *a* as deep as the cut taken over the surface *b*, it will be found upon releasing the clamps that the work will again change its form, this time springing back to about its normal shape. The face *b* will again be nearly straight and the face *a* curved, as shown in Fig. 4 (*c*). After the first cuts are taken and the skin is removed, there is less tendency for the work to change its shape. Because of this change of form in work, due to the removal of the surface tension, it is always desirable to take *all* the roughing cuts before any finishing cuts are taken. If the work is very thick and heavy, and the surfaces are small, there is less danger of the work changing its shape than on light, thin work that is machined all over. It is a good rule, however, whenever it is possible, to rough out the work all over before any finishing cuts are taken.

SPECIAL PLANER JOBS.

13. Work Too Long for the Platen.—A job occasionally occurs that is too large to be handled upon the planer in the ordinary way. In such cases, special rigs or devices must be used in order that the job may be successfully carried through. The operation of planing pieces longer than the stroke of the planer is quite common. When this is done, one end of the work is clamped to the platen while the other end extends beyond; it is supported on bearings or rollers when the free end overhangs very much. After one end is planed, the work is moved along the platen so that the finished part projects; the unfinished part is then planed. In a job of this kind, considerable skill and care is necessary in resetting the work, so that the two parts when finished will be as true as though it had been planed without any resetting.

14. Work Too Wide for the Housings. — When work is too wide to pass between the housings and is not very long, a special extension head may be made as shown in Fig. 5. Here a bracket *a* has been made and fitted to the slide of the down feed; the tool block *b* is then attached to

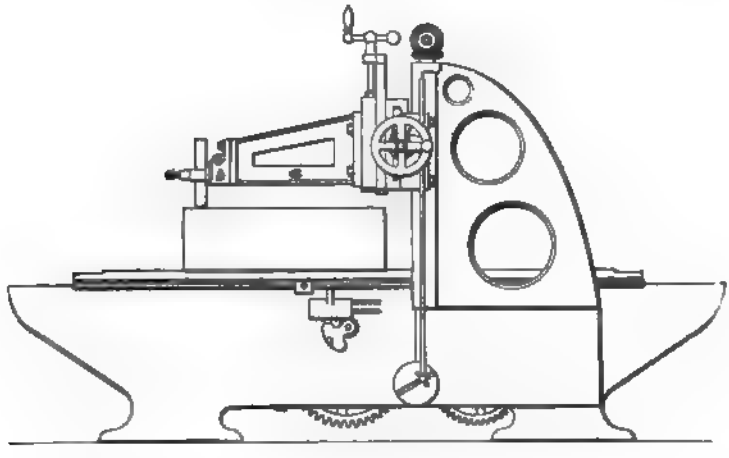

FIG. 5.

the outer end of the extension head. The bracket is made long enough to reach over the work when the latter is very close to the housings. The spring of the long arm and the lack of rigidity in the cross-rail make it rather difficult to take a heavy cut; the device will do the work, however, when no better means are at hand.

15. Special Rig for Planing Curved Surfaces.— For some kinds of work, **special devices** and **rigs** may be devised to save much time. Fig. 6 shows an end view of a planer fitted with a rig devised for planing a curved surface. The work there shown at *c* is the base of a dome, which is to be planed to fit the cylindrical part of a locomotive boiler. A special long head *a* is pivoted above the work at the point *b*; the distance from the point of the tool to the fulcrum *b* is made equal to the radius of the boiler. The regular planer head with the down feed is attached to the lower end of the

head, which is gibbed to the curved part of the cross-rail so that it can slide freely as it swings about the center *b*. In operation, the cross-feed motion is used as in ordinary planing; the tool is adjusted to the work by the regular

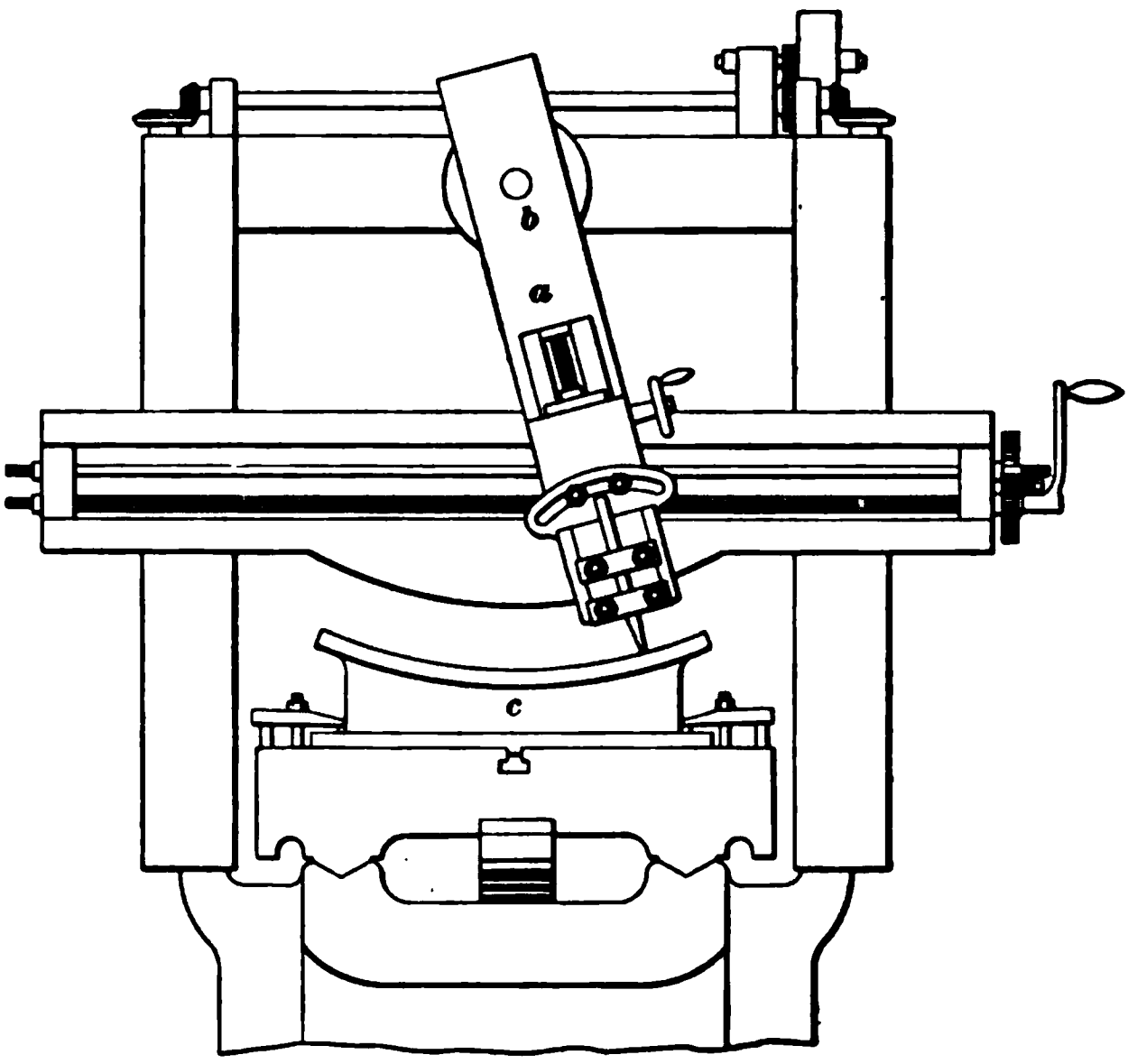

FIG. 6.

down feed. A curved surface having a predetermined radius of curvature is produced by this device with the same ease that a flat surface is planed on an ordinary planer.

16. Special Gauges for Setting Planer Tools.— When many pieces are to be planed to the same size and shape on the same planer, and when the faces to be finished are somewhat complicated, which involves careful adjustment of the tool for each piece, a **special gauge** may be used for setting the tool. As an illustration of the application of such a device, a tool-setting gauge used in planing lathe beds is here given. When a lot of lathe beds of the same size are to be made, they are usually required to be planed alike. The problem of planing the top of a lathe bed with

four V-shaped ways on it so that the ways are accurately located in reference to one another, is one that requires considerable care in the setting of the tool. The problem naturally becomes more difficult when a number of lathe beds are to be planed so that the ways are exactly alike on all of them. It can be solved very readily, however, by the use of a tool-setting gauge made to the correct

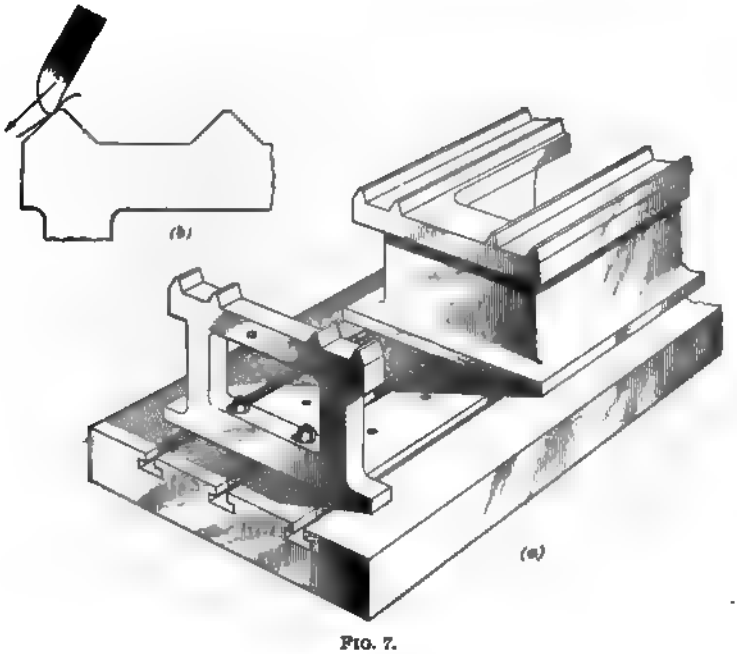

FIG. 7.

cross-section of a finished lathe bed. This gauge *a*, which may be made of cast iron, is bolted to the platen in line with the lathe-bed casting, as shown in Fig. 7 (*a*); space enough is left between it and the end of the work for the planer to reverse without the tool touching the gauge. After the work is roughed out, the platen is run back far enough so that the tool is brought directly over the gauge.

Suppose it is desired to finish the outer side of one of the V's. The tool is then adjusted so that it just pinches a piece of tissue paper placed between it and the gauge, as

shown in Fig. 7 (*b*), the head having been previously set to plane the correct bevel. The tool is now fed up away from the gauge, and, after the stroke of the platen is adjusted to cut the correct length, the tool is fed down over the face of the work in the direction of the arrow in Fig. 7 (*b*). In a similar manner, the tool is set for each of the other faces, and the work is thus planed in accordance with the gauge. By setting the tool with a piece of paper between it and the gauge, the tool can be carefully adjusted to the gauge; at the same time, a slight amount is left to be removed in filing and fitting. It may be seen that, by the use of a tool-setting gauge, all the beds planed will be alike; furthermore, the tool can be easily and quickly set.

17. General Remarks.—There are no general rules applicable to all cases that can be given for setting work on the platen of the planer and clamping it thereto. A number of different examples have been given that will be of aid in selecting a method of setting and clamping work. Considerable ingenuity will often be required in the setting of complicated work, and much originality is called for, and can be shown, in the application of clamping devices and the designing of special devices to aid or facilitate the planing of the work.

WORK OF THE SHAPER.

THE MACHINE.

18. Similarity to the Planer.—The duty of the **shaper** is to produce flat surfaces. It is adapted to about the same class of work as the planer; in fact, in many cases, a piece of work can be done with equal ease on either machine.

The points in which the action of a planer and a shaper differ are as follows: In the planer, the *tool* is stationary during the stroke, and the work is moved along under it in order to take a cut. In the shaper, the *work* is stationary

during the cut, while the tool passes over it. In the planer, the *tool* feeds sidewise during the return stroke of the work; in the column shaper, the *work* feeds sidewise during the return stroke of the tool.

The shaper is generally adapted to a lighter class of work than the planer, or for work that does not require a long stroke of the tool.

COLUMN SHAPER.

19. The common form of shaper is the **column shaper**, which is driven either by a crank or by gearing. Fig. 8 shows the typical form of the column shaper. The

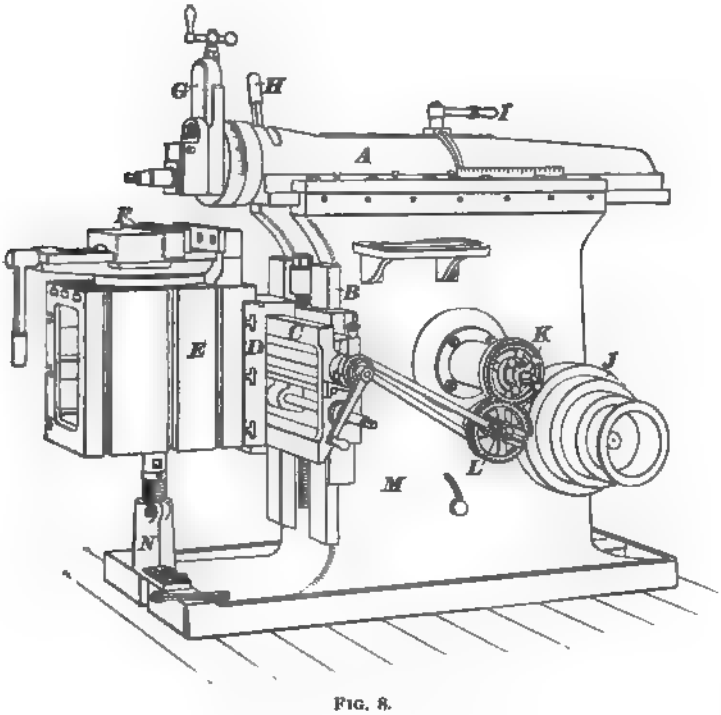

FIG. 8.

term column is applied to it because the body of the machine forms a heavy vertical column.

20. Names of Parts. — A column shaper consists essentially of a body, or **column,** *M*, which supports the driving mechanism and the various stationary and movable parts of the machine; a longitudinally movable **ram** *A*, which carries the cutting tool at one end; and a movable **table** *E*, to which the work is fastened. The ram *A* slides in flat bearings formed on top of the column; at its front end it carries the **shaper head** *G*, which gives the down feed. This shaper head is always so arranged that it can be swiveled around to make any angle with the top surface of the table; a suitable locking arrangement is then provided. In this case, a handle *H* is used for locking the head. The ram is moved to and fro over the work by the driving mechanism within the column; this driving mechanism is operated by belting from a countershaft to the **cone pulley** *J*. The length of stroke and the position of the ram with reference to the work are adjustable. The shaper head *G* carries a tool block similar to that of a planer. The table *E* is fastened by bolts to a **saddle** *D*, which is gibbed to the **cross-rail** *C* and can be moved along it either by hand or by an automatic feed. The cross-rail can be raised or lowered by means of a screw on the **vertical slide** *B*, which forms part of the column, and can be clamped to it at any point. The table *E* usually has a removable **vise** *F* fitted to it. In order to support the table, a **screw jack** *N* is occasionally attached to the base of the machine. The amount of feed for each stroke of the ram can be adjusted by varying the position of a slide that can be locked by the **handle** *L*.

THE CRANK SHAPER.

21. The driving mechanism of the column shaper shown in Fig. 8 is illustrated in detail in Fig. 9, which is a vertical section taken through the ram and column. A forked block *a* is clamped in a slot in the ram *A* by means of the handle *I*. A heavy slotted lever *b* is pivoted at its lower end *c* to the column; its upper end engages the forked block *a*. The lever

is vibrated back and forth by means of the crankpin *d*, which is carried on the large gear *o*. This gear *o* is driven by the pinion *m* keyed to a shaft driven by the cone pulley *f*, Figs. 8 and 9. As the gear *o* revolves, the crankpin *d*, which carries the block *e*, slides in the slot in the lever *b* and moves

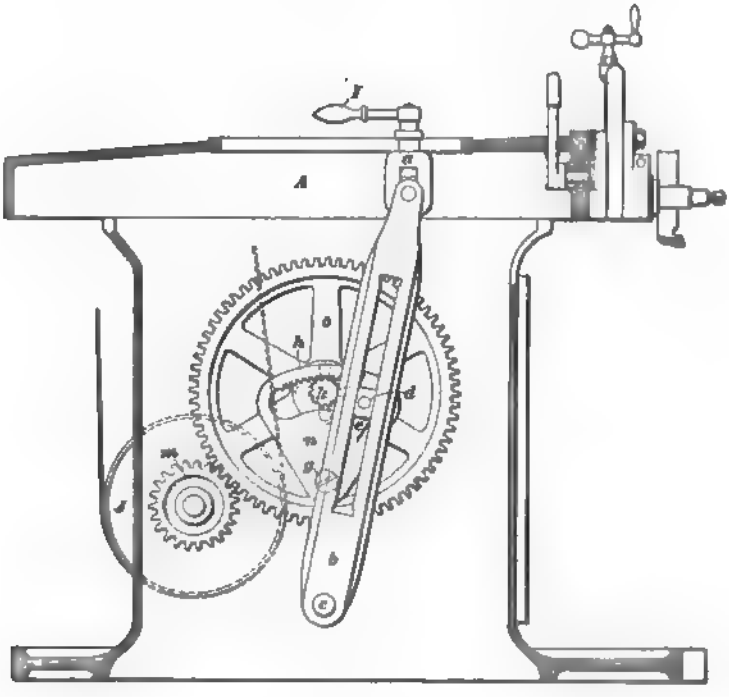

FIG. 9.

the lever back and forth. It may be seen that when the distance of the crankpin *d* from the center of the gear is increased, the movement of the upper end of the lever will become greater and, consequently, the stroke of the ram will be longer.

Now, if the position of the crankpin *d* can be varied in respect to the center of the gear *o*, it will be seen that the length of stroke can be varied. For this purpose, the crankpin is attached to a quadrant *n*, which can be rotated about

the center *g* near the rim of the gear *o*. The quadrant is rotated by means of a rack *h* and a pinion *k*; this pinion is so arranged that it can be rigidly held in any position by means of the handle *K*, Fig. 8. In order to change the length of stroke, the pinion *k* is revolved until the quadrant, and, hence, the crankpin, is in the desired position; the pinion, and, consequently, the quadrant and crankpin, is then clamped to the gear *o*. After setting the crankpin for the right length of stroke, the position of the ram is adjusted so that the tool will just pass over the work. This is done by unclamping the forked block *a* from the ram by turning the handle *I*; the lever is then placed in its extreme forward position by turning the cone pulley *J* by hand, and finally the ram is moved by hand until the point of the tool is either just beyond the work or close up to the shoulder when it is required to plane up to a shoulder. The block *a* is then again clamped to the ram.

THE GEARED SHAPER.

22. The **geared shaper** is similar in appearance to the column crank shaper; it differs from it only in the method employed for driving the ram. In the geared shaper a rack is attached to the under side of the ram; the latter is driven by spur gearing in the same manner as a spur-geared planer. The motion of the ram may be reversed by a reversing belt that is alternately shifted, together with the driving belt, from the tight to the loose pulleys; this method is similar to that employed for operating the platen of a spur-geared planer. In some shaper designs, the reversing is accomplished by friction clutches, which alternately grip and release the pulleys carrying the driving and reversing belts. These friction clutches are operated by tappets attached to the rams; the tappets are movable and can be clamped anywhere along the ram. They determine by their position the length of the stroke and the position of the ram at the beginning and end of the stroke.

THE TRAVELING-HEAD SHAPER.

23. A style of shaper known as a **traveling-head shaper** is used to some extent for work beyond the range of the column shaper. Such a shaper is shown in Fig. 10. It has a very rigid **box bed** *a*, which carries the ram *b* on top and one or more tables on its side. The ram is mounted on a saddle *h*, which can be moved along the bed either by hand or by an automatic feed. The line of motion of the saddle is at right angles to the line of motion of

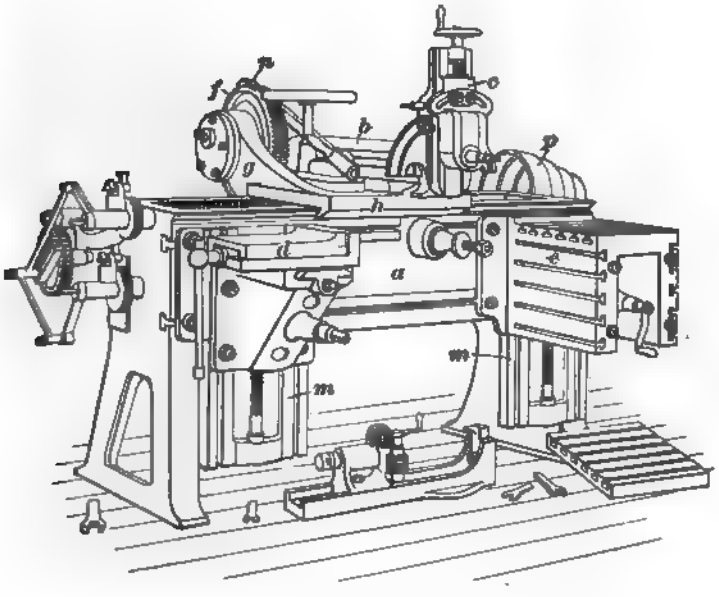

FIG. 10.

the ram; the tool is fed across the work by moving the saddle. The shaper head *c* is fastened to the end of the ram in the same manner as in a column shaper. Vertical slides *m*, *m*, which can be moved along horizontal ways on the front of the bed and clamped thereto, carry the table *e* and the vise *d*. The table and vise can be moved in a vertical direction by means of screws, and can be rigidly clamped to the vertical slides in any position. The work when small

is fastened either to the table or held in the vise; if large, both may be used for supporting and holding it.

24. Fig. 11 is a right-hand side view of the machine; it is partially shown in section. Corresponding parts have

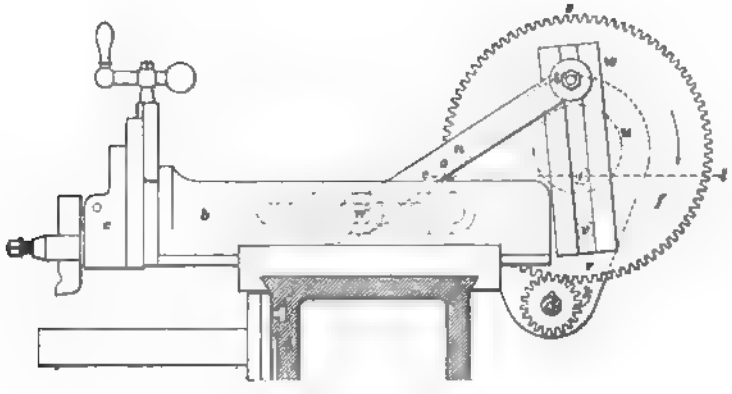

FIG. 11.

been lettered alike in Figs. 10 and 11. Power is transmitted from a line shaft or countershaft by a belt to the cone pulley *p*, which is fastened to a splined shaft *j* extending along the back of the bed. The shaft carries a pinion *k*, which has a feather fitted to the spline and, consequently, is free to slide along the shaft, but is forced to rotate with it. The pinion *k* meshes with the gear *f*. The gear *f* carries a crankpin *i*, which is mounted on a slide and can be clamped to the gear at any distance from the center within its range. A connecting-rod *n* is attached to the crankpin and also at *n'* to a block fitted to a slot in the ram *b*; the block can be clamped to the ram in any position within the range given by the length of the slot. By varying the position of the crankpin *i*, the length of stroke of the ram can be adjusted; in order to change the position of the ram so that the tool will pass over the surface to be machined, the block at *n'* is loosened and the ram pushed in or out by hand until it is in the desired position, when the block is again clamped to the ram.

With this type of shaper, it is possible to take cuts on quite heavy work, since the work, on account of being stationary during machining, may be supported by jacks or by blocking placed on the floor. This cannot be done very well with a column shaper, where the work is usually supported entirely by the table with which it moves. The column shaper is also open to the objection that heavy work brings a great stress on the cross-rail that tends to let the end of the work farthest from the column sag down. Furthermore, the tendency to sag is increased by the pressure due to the cutting tool forcing its way through the metal. It is easily seen that, in a shaper, the setting of the work must not be disturbed before the cut is finished.

25. Quick-Return Motion.—The geared shaper is frequently provided with a quick-return motion, as shown in Fig. 11. The gear *f* revolves on a large pin or hub *u*. The piece *w* is secured to *u* by the eccentric pin *t* and is provided with a slot in its back in which the driving pin *v* is free to slide. As *f* revolves it forces *w* to revolve about *t*, but owing to the eccentric position of *t*, the pin *i* makes one-half revolution while the gear is revolving through the angle *o r l* and the other half while the gear is revolving through the angle *l s o*. By making the former the return and the latter the forward stroke, the tool is given a slow advance and a quick return.

CUTTING SPEEDS.

26. The proper cutting speeds of shaper tools are the same as those of planer tools. In a crank shaper, the average speed of the ram varies with the length of the stroke, since, with the belt on a given step of the cone, the shaper will make a constant number of strokes per minute, whether they be long or short.

Suppose the shaper makes 60 strokes per minute and the strokes are 1 foot long. Then the tool moves 1 foot forwards and 1 foot backwards in 1 second, or 2 feet per

revolution; this is equal to a cutting speed of 120 feet per minute. Suppose the length of stroke is changed so that it is 1 inch long, but that the machine continues to make 60 revolutions per minute. Then, in 1 stroke, the tool moves 2 inches, and in 60 strokes it would move 120 inches, or 10 feet. Now, in one case, the cutting speed was 120 feet per minute and in the other case it was 10 feet per minute. Then, since the average cutting speed depends upon the length of the stroke, it follows that a constant average cutting speed can only be kept by varying the number of strokes per minute. For this reason, crank shapers are always supplied with a cone pulley for the driving belt.

In geared shapers, the cutting speed does not vary with the length of stroke, but remains constant, as is the case in planers. For this reason, geared shapers do not require cone pulleys in order to keep the cutting speed constant. They are often supplied with cone pulleys, however, to allow a cutting speed suitable to the metal operated on to be selected.

SHAPER TOOLS.

27. The tools for **shaper work** are the same as those used upon the planer, since the cutting action is the same in each case. In the shaper and in the planer, the shank of the tool is always in a plane perpendicular to the line of motion of the tool or the work, so that the angle of clearance always remains constant. Special tool holders and inserted-blade tools may be as effectively used in the shaper as upon the planer.

HOLDING THE WORK.

28. For the greater part of the work done on the shaper, the shaper vise or chuck is used. The methods employed for setting the work square and true so that it may be planed square and parallel are the same as those used in

setting work in the planer vise. When the work cannot be clamped in the vise, the vise may be removed and the work fastened to the table In this case, the same devices are used for holding the work that would be employed for clamping it to the planer platen.

TAKING THE CUT.

29. Range of Utility of the Shaper.—For short cuts upon pieces of relatively small size, the shaper is usually better adapted than the planer. For cutting slots or keyways, or for cuts that terminate close to a shoulder, the shaper possesses the advantage that it can be more readily set to take a particular length of stroke, and it will then cut that exact length of stroke each time. This is true particularly of the crank shapers, but only to a limited extent is it true of geared shapers. On the planer or geared shaper the reversing point is not positive, because of the uncertainty in the slip of the belts and the gripping of the pulleys by the friction clutches.

30. Cutting a Keyway.—Whenever a cut terminates in the metal, a notch must be cut at the end so that the

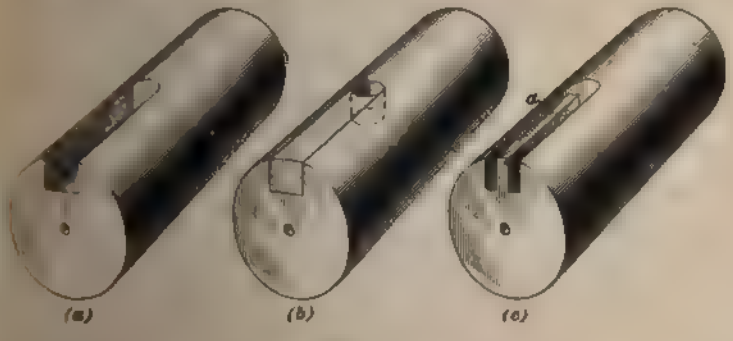

FIG. 12.

tool will pass out of the cut each time. Suppose that a keyway is to be cut in the end of a shaft, as shown in Fig 12 (*a*)

The keyway should first be carefully laid out by scribing lines to indicate its width and depth. At the place where the keyway terminates in the shaft, a circle is described equal in diameter to the width of the keyway. In this circle a hole is drilled, as shown in Fig. 12 (*b*), equal in depth to that of the keyway. The work is then set in the vise or clamped to the table, so that the lines on the end that indicate the sides of the finished keyway are perpendicular. Slots are now cut with a parting tool into the shaft, so that the outer side of each slot coincides with the lines indicating the width of the keyway, as shown in Fig. 12 (*c*). After these lines are cut, the remaining core *a* between the slots is cut out. If an attempt is made to take such a cut as is shown in Fig. 12 without first drilling or otherwise cutting out a place for the tool to run into and thus cut off the shaving, each shaving will clog the slot slightly so that after a few strokes the tool will strike with great force against solid metal; if the cut is continued, the tool will break, or the work will be pushed from the machine.

31. Cutting to a Shoulder.—Suppose that it is necessary to take a cut over the piece of work shown in Fig. 13, and that the surface *e* is to be partly removed up to the line *A B*, as indicated by the dotted lines. Before this cut can be taken on the shaper, it will be necessary to cut

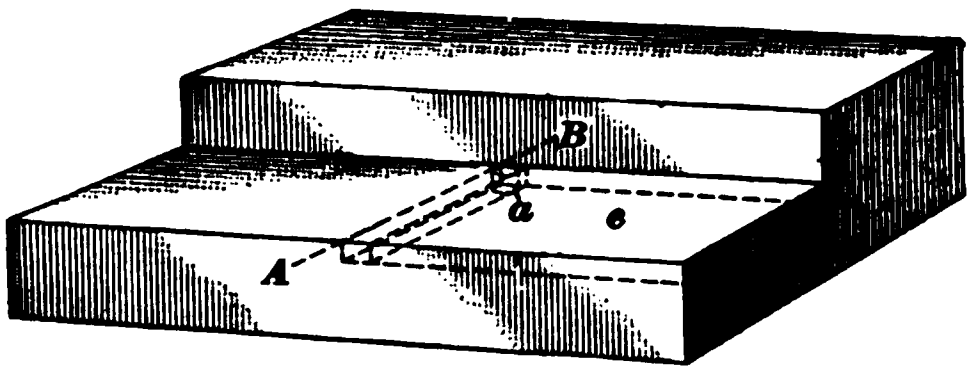

FIG. 13.

a groove at *A B* equal in depth to the amount to be removed. This groove can be cut with a cold chisel and a hammer. It can also be done by first drilling a hole at *a* and then planing it in with a parting tool. The part of the surface *e* indicated by dotted lines can then be easily planed

away. In castings, when it is known that such cuts as these are to be taken, much work can be saved by coring out a space where the cut is to terminate. This saves the time required for cutting a groove with the chisel or by planing.

32. Holding Work to the Saddle.—Fig. 14 shows a method of holding certain forms of work on the shaper. The box table and vise having been removed, the work *a*, which in this case is a pair of legs for a lathe bed, is clamped directly to the front of the saddle. It may be

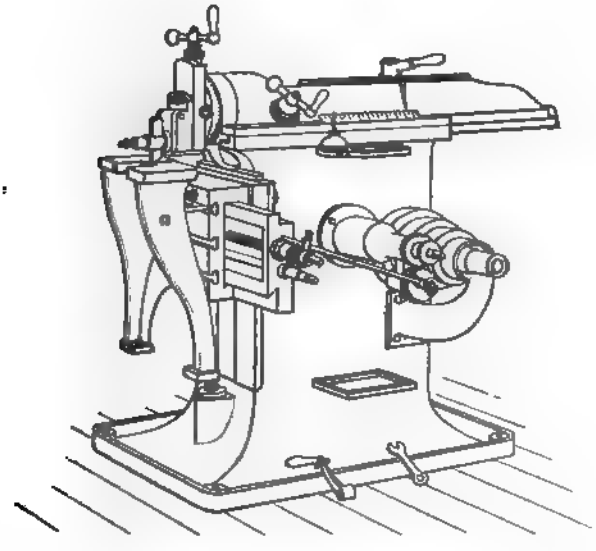

FIG. 14.

observed that this method of holding work in the shaper is analogous to attaching it to an angle plate fastened to the platen of a planer. It is best adapted for work that is either too high to be placed on top of the table, or has a shape that prohibits fastening it there.

33. When work is clamped against the front of the saddle, its setting cannot be tested with a surface gauge.

This is also occasionally the case when rather large work is clamped to the top of the table. Then, the setting of the work may be tested by means of a pointed wire, a scriber, or a tool held in the tool post, and moving the ram by hand. In some instances, the ram can be run out until it extends clear over the work; a surface gauge can then be inverted and held up against the bottom of the ram, along which it is moved in order to test the setting of the work.

34. Rack Cutting.—In some cases the shaper may be used as a **rack cutter.** The vise is so set that the jaws are at right angles to the line of motion of the tool, and the rack blank is clamped in it. A tool having its cutting edge formed to give the correct shape of tooth is set in the tool post, and is fed down into the work, thus cutting out the space between two teeth of the rack. The work is then moved sidewise the correct distance to cut the second space and the tool is again fed into the work to the same depth as before.

For comparatively rough work, the spacing of the teeth may be laid out on the face of the rack, and the tool set as near as can be judged to the marks by moving the saddle by means of the feed-screw. A better way is to use the feed-screw as a spacing device; from the pitch of the screw may be calculated the number of turns and part of a turn the feed-screw must make in order to move the saddle an amount equal to the pitch of the rack teeth. The feed-screw is then turned that amount after each space is cut. In order to insure a correct rotation of the screw, an index wheel must be attached to it. In many cases, it will be found that one of the change gears belonging to an engine lathe can be temporarily attached to the end of the feed-screw and made to serve as an index wheel. In that case, the teeth of the gear-wheel will take the place of the graduations on an index wheel. In making the calculations, the feed-screw may be regarded as a micrometer screw, and its rotation for a given advance is calculated in the same manner as is done with any micrometer screw.

SPRING OF MACHINE AND WORK.

35. Spring of the Ram.—The chances that the tool and the work will spring are greater in the shaper than in the planer. In the shaper, there is a tendency for the tool to spring away from the cut; this is due to the lack of absolute rigidity in the ram, and also to looseness of the guides in which the ram slides. When the stroke is very long and the shaper head is far out from the column, the tendency of the ram to spring is much greater than when the head is close to the column. It is on account of this lack of support of the cutting tool at the end of a long stroke that the average shaper rarely exceeds a stroke of 30 inches, although when built very heavy they are occasionally designed for a longer stroke.

36. Spring of the Work.—The spring of the work itself, and also the sagging down of the table on which it is supported, which is increased by any looseness of the gibs holding the saddle to the cross-rail, are fruitful sources of error. Errors due to these causes are made still larger by the action of the cutting tool, which, in forcing its way through the work, tends to spring it still farther away from the machine.

THE DRAW-CUT SHAPER.

37. In order to overcome as far as possible the errors mentioned in Art. **36,** shapers have been designed in which the cutting is done during what would be termed the *return stroke* in the ordinary shaper. In other words, the tool, instead of being pushed across the work by the ram, is drawn across. From this fact, machines of this class derive the name of **draw-cut shapers.**

38. Fig. 15 is an illustration of such a machine. It will be noticed that in general appearance it does not differ from the ordinary column shaper. Since it is intended to cut

while the shaper head is moving toward the body of the machine, the tool block *a* is reversed on the ram *b* in order to allow the tool to swing away from the work while the ram is moving outwards. When the ram draws back into the

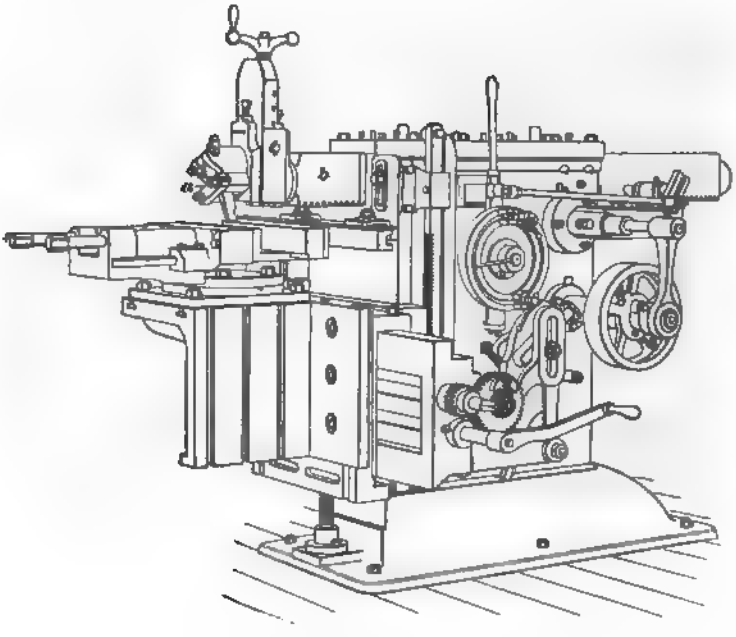

FIG. 15.

machine, the tool block swings to its seat. As a matter of course, the tool must be set in the opposite direction from that which it occupies in the ordinary shaper; that is, its cutting edge must be *toward* the ram.

39. Advantages of the Draw Cut.—For some kinds of work, a draw cut possesses distinct advantages. When a cut is being taken, the pressure due to the tool forcing its way through the metal is exerted toward the machine; especially in the case of work clamped to the saddle, it tends to hold the work more securely. Furthermore, in case of work bolted to the table or held in the vise, this pressure partly relieves the cross-rail of the stresses to which it is subjected

by the weight of the table, vise, and work. In many cases, great rigidity can be secured by putting blocking or jacks between the work and the face of the machine, thus greatly reducing the spring of the work and the machine during the cutting operation.

OPEN-SIDE PLATE PLANER.

40. Fig. 16 shows a modification of a planing machine specially designed for planing the edges of steel and iron plates. This machine belongs to a type known as **open-side** machines. The planer shown, while commonly called a "planer," is really a modification of the shaper, since the work remains stationary during the cutting operation, while the tool moves.

41. Referring to the figure, it will be seen that the machine is supplied with a stationary table *a* to which the work is clamped by means of jacks *j*, *j*, which butt against the girder *b*. The head *c*, which carries the cutting tool, is gibbed to ways *f* on top of the base; it is operated by a screw similar to the leadscrew of a lathe. This screw carries on one end the gear *g*, which meshes with gearing driven from the driving shaft. Power is transmitted to this shaft by belting it to a line shaft or countershaft. In the machine shown, the leadscrew is driven from both ends of the machine by means of the pulleys *h* and *i*. When the head has reached the end of its stroke, its motion is automatically reversed by the tappet *l*, which is fastened to the head, striking the lug *m* or *n* on the reversing rod *k*. This shifts the driving and reversing belts. The length and position of the stroke may be adjusted by shifting the lugs *m* and *n* to suitable positions along the rod *k*. In the particular design of machine shown, the tool may be held in a swivel socket in which it may be reversed at the end of each stroke in order to cut during the return stroke. A platform is sometimes bolted to the head for the operator to stand on, so that he can always be close to the cutting tool and watch its operation.

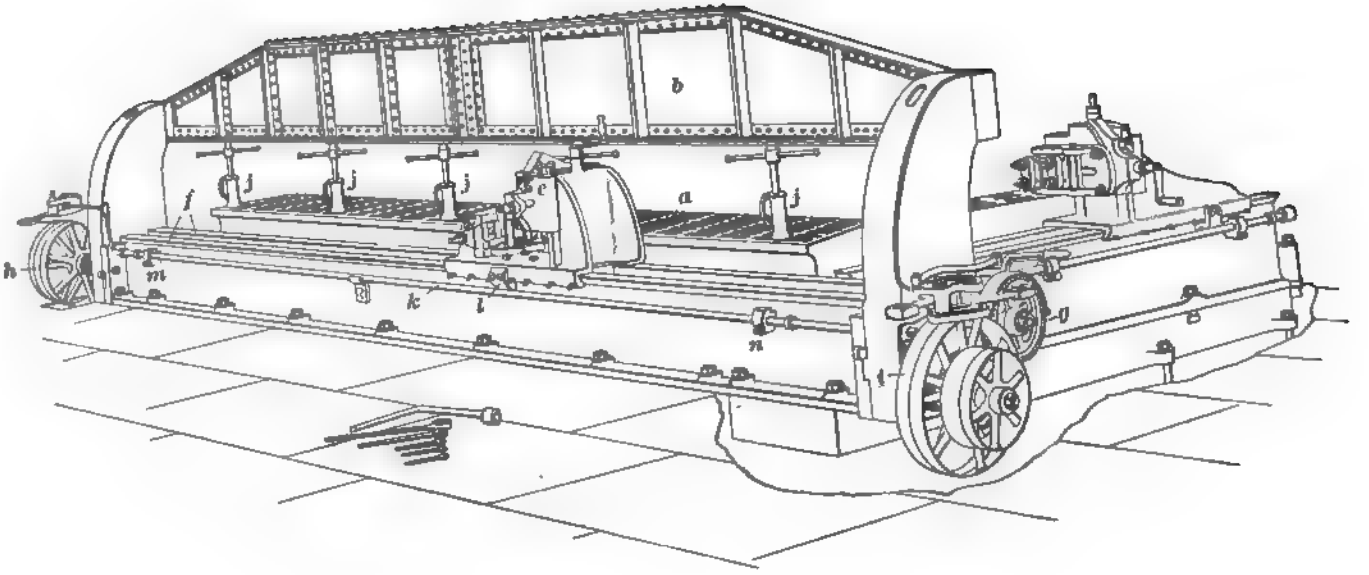

FIG. 16.

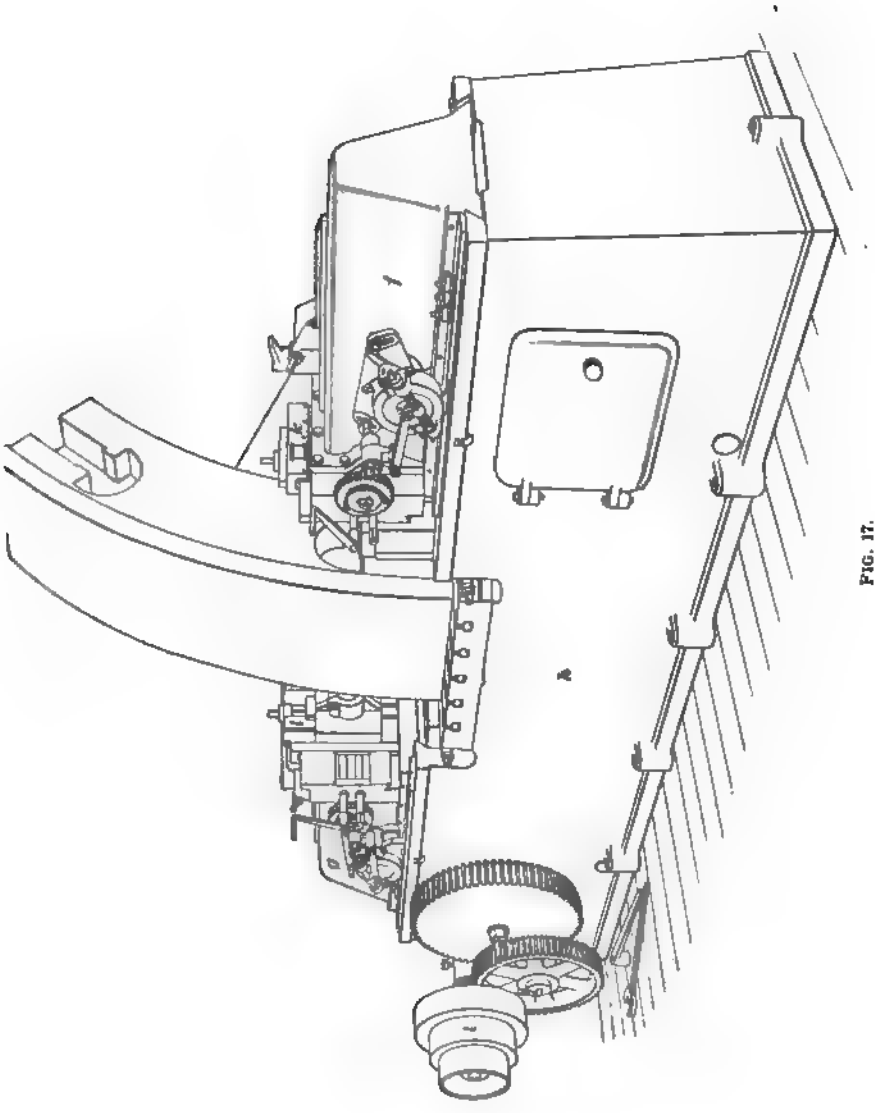

FIG. 17.

A SPECIAL SHAPER.

42. In manufacturing certain lines of work in quantities, it often happens that while the work can be done on an ordinary design of machine tool, it can be done more rapidly and more economically on a machine especially designed for the purpose.

43. Fig. 17 is an illustration of a special shaping machine with two rams; this machine was designed for planing certain slots in the sides of segments of large flywheels, and is adapted for similar work. It naturally has not as wide a range of application as the ordinary shaper, but is better suited for its own class of work.

44. Fig. 18 shows two segments of a large flywheel and the method of joining them together that has been adopted in the shop where the machine shown in Fig. 17 is used. The segments are first carefully finished on their

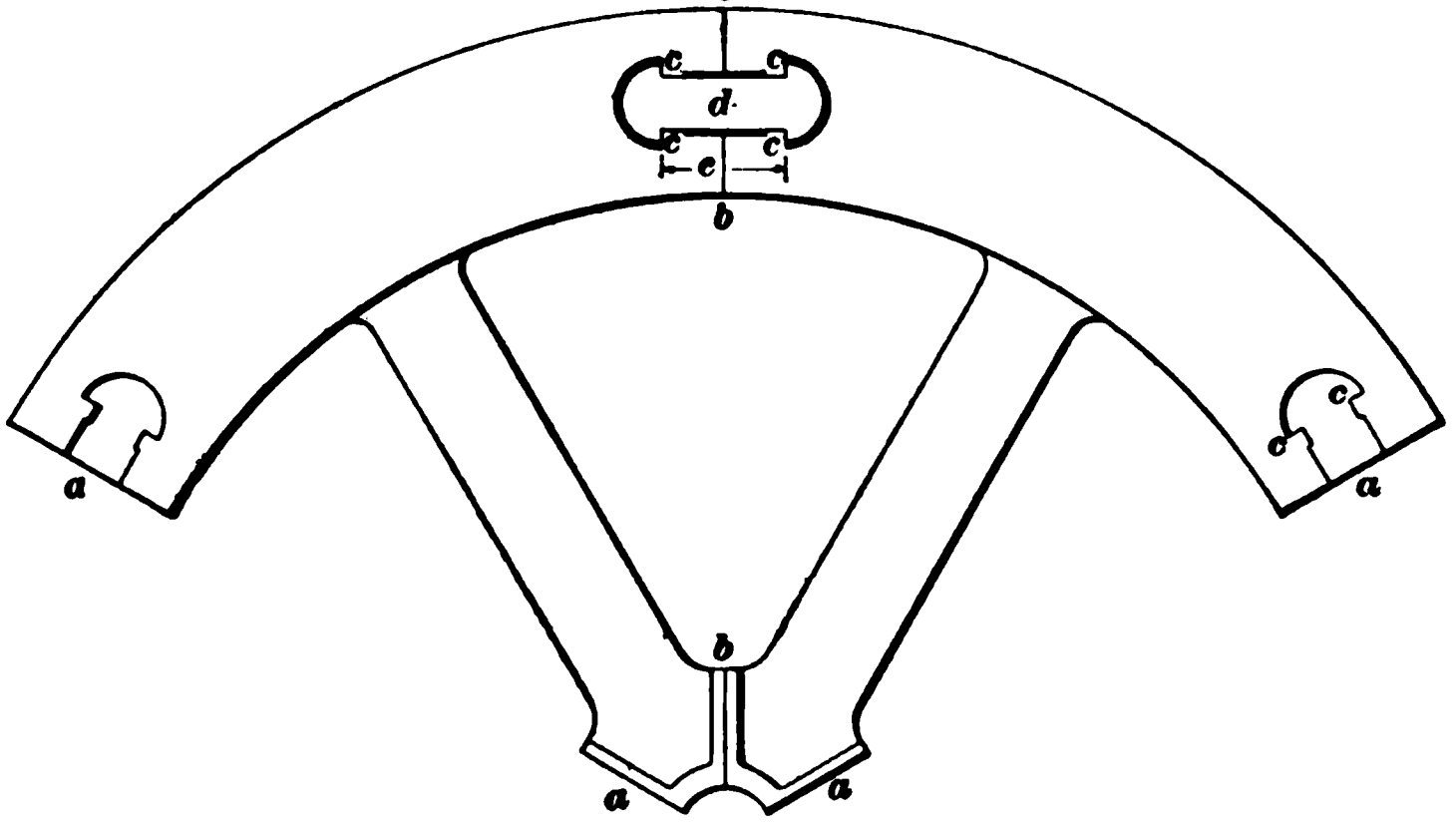

FIG. 18.

faces *a*, *a* to the correct angle, so that when placed together they make a close joint at the hub and rim, as shown at *b b*. The segments are held together at the rim by steel links placed on each side of the wheel in a suitable recess. One of these links is shown in place at *d*. The links are put in

place while hot; on cooling, they shrink and draw the joints tightly together. The shrinking allowance that is necessary to hold the segments rigidly together is carefully estimated, and the links are then carefully made so that the distance e under their two heads is the same in all the links. In order that the heads of the links will have a fair bearing on the shoulders c, c of the recesses, these must be machined. Furthermore, the distance of these shoulders from the joint must not only be correct in order that the proper tension

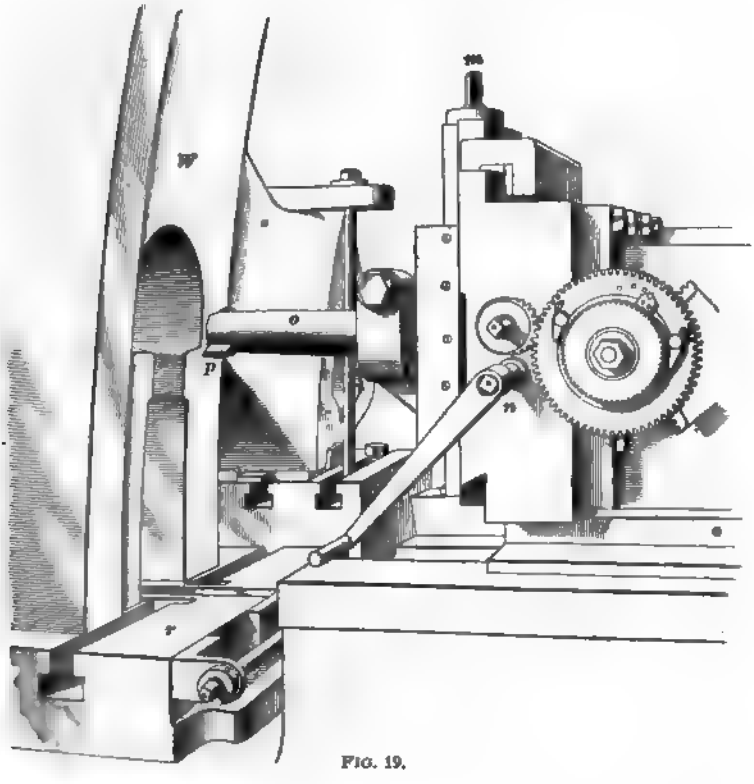

FIG. 19.

may be obtained, but it must also be alike in all segments in order that any link may be used for any joint.

45. Referring now to Fig. 17, the machine is seen to have two rams f and g, which are operated independently

or simultaneously by a suitable device placed within the base *h* and driven from the pulley *i* by the intervention of gearing. Each ram carries a shaper head, shown at *k* and *l*. These shaper heads are arranged for feeding the tool in a horizontal and vertical direction and are fitted with hand and automatic feeds.

46. An enlarged view of one head and of the work is shown in Fig. 19. In this figure, the down-feed screw is shown at *m* and the horizontal-feed screw, with its detachable handle, at *n*. The tool *o* is carried by a bracket that forms the tool block; this tool is made with an inserted cutter *p*. The work *W* is bolted to the table *r* and remains stationary during the cutting operation; the table is adjustable in a horizontal direction across the bed for the sake of convenience and adaptability. To insure that the distance from the joint to the shoulders *c*, *c*, Fig. 18, is made alike in all segments, the height of the tool point *p*, Fig. 19, above the table is adjusted by means of a gauge that has been made the correct height. The tools in both heads having been adjusted properly, the two recesses opposite each other are finished simultaneously.

WORK OF THE SLOTTING MACHINE.

THE MACHINE.

47. The **slotting machine** is a modification of the shaper, and is similar to it in a great many respects. It differs chiefly from the shaper in that the ram moves in a vertical instead of a horizontal direction. It is adapted for the finishing of flat or curved surfaces at right angles to some other surface of the work. It was originally designed for the slotting out of keyways in pulleys, but practice soon demonstrated its adaptability for a large class of work other than slotting. While the primary purpose of the machine

has been changed entirely, the original name of "slotting machine" has been retained and is commonly applied to it.

48. Fig. 20 is an illustration of a typical modern slotting machine. It consists essentially of a very rigid frame *M*, which carries the platen *F* and the ram *A*. The machine is so constructed that the line of motion of the ram is perpendicular to the surface of the platen. Power from a line

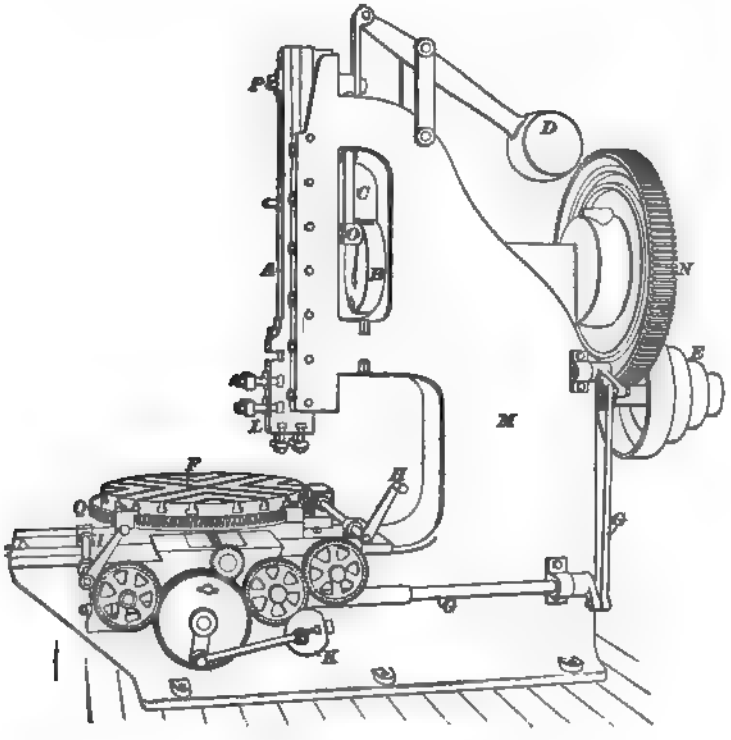

FIG. 20.

shaft or countershaft is transmitted by a belt to the driving pulley *E*, which carries a pinion that meshes with the gear-wheel *N* on the driving shaft. A crank disk *B* is keyed to the driving shaft; a crankpin *O* is movably mounted in a radial slot in the crank disk and can be rigidly clamped to

it. A connecting-rod *C* is attached to the crankpin, and also to a wristpin carried by the ram. This rod transforms the rotary motion of the crankpin into the rectilinear motion of the ram. The similarity of the slotter to the crank shaper in this respect will be noted. The length of the stroke is adjusted by moving the crankpin toward or from the center of the crank disk. In order to allow the ram to be adjusted in reference to the work, the ram is slotted and the wristpin mounted in this slot. The wristpin can be clamped to the ram by means of the bolt *P*. The end of the ram carries two sets of tool clamps, as shown at *L*, so that the cutting tool can be placed in either one of two positions at right angles to each other. The weight of the ram is counterbalanced by a heavy weight *D*.

49. The platen *F* is mounted on a carriage similar to a lathe carriage; it can be moved across the carriage and the latter can be moved along the bed that forms part of the frame. It is thus seen that the platen is movable in two directions at right angles to each other. In addition, the platen can be rotated around its axis, it being pivoted to the saddle and provided with a worm-wheel *Q*, which extends around its circumference. A worm operated by a handle *H* meshes with the worm-wheel, and, consequently, the platen is rotated by turning the handle. The carriage can be moved along the bed by the handle *I*. Automatic feeds for all directions of motion of the platen are usually provided; in this case, the feeds are operated by the feed-rods *G*, *G*. The amount of feed per stroke is regulated by varying the position of a pin in the feed disk *K*, from which, through the intervention of a ratchet wheel and gearing, the feed-screws are driven.

50. Setting the Ram.—When adjusting the slotter ram for the tool to cut a given piece of work, the ram should be so adjusted that the edge of the tool will pass by the lower edge of the work but not touch the platen. To set the ram, it should be let down so that the tool rests on a thin piece of metal on the platen. The machine is then turned

by hand so that the crankpin *O* is at the lowest part of the stroke, after which the bolt *P* is tightened. When the ram is raised, the spacing strip may be removed from under the tool, and, for each stroke, the tool will stop short of the platen a distance equal to the height of the spacing strip.

HOLDING THE WORK.

51. Clamping Work to the Platen.—The work to be operated on is clamped to the platen in the same manner in which work is clamped to a planer platen or shaper table. The same care is necessary in setting the work true and clamping it so that it will not be sprung out of shape.

The work for the slotter should be laid out with lines to work to. These lines are essential in setting the work, since, when a flat surface is to be planed, the horizontal line indicating the finished edge of that surface must be set parallel to one of the slides of the table.

52. Setting the Work.—In planer work, a surface gauge can be used, and the work set so that the line indicating the edge of the surface to be machined is parallel with

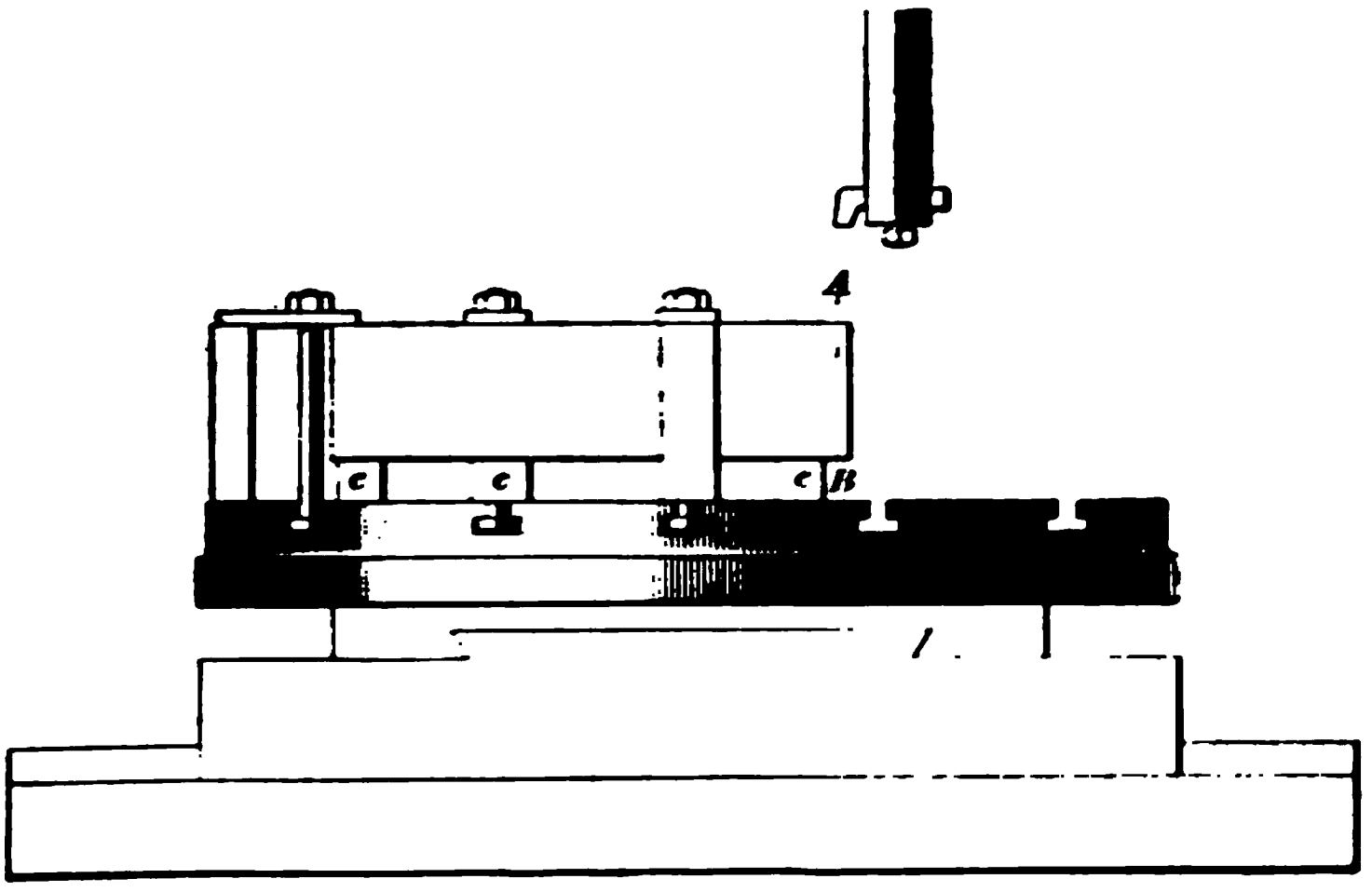

FIG. 21.

the platen. In the slotter, the setting of the work cannot be tested in this way, since the line of motion of the tool is at right angles to the surface of the platen instead of parallel with it. The work must be clamped to the platen so that the line indicating the edge of the surface to be cut, shown by the dotted line *A B*, Fig. 21, is perpendicular to the platen. This may be tested with a square. Parallel strips, or blocks, *c*, *c* must be put under the piece in order to raise it above the platen, so that the tool may pass entirely over the surface to be machined. After the work is set true, a tool is clamped in the ram, and the work is brought under it, so that the tool point just comes to the line scribed on the work. The setting of the work is then tested by moving the platen past the tool point, and noting if the tool point follows the line. If it fails to do so, the platen and, hence, the work may be revolved so that the point of the tool will just follow the line. The work will then be set, and be ready for the cutting operation.

Bolts, pins, angle plates, and special holding devices may be used for holding work on the slotter platen in the same way that they are used on the planer platen or shaper table.

53. Cutting Circular Surfaces.—When cutting circular surfaces on the slotter, the work must be set so that its axis coincides with the axis of rotation of the platen. For instance, if a cylindrical surface having a radius of 10 inches is to be finished in the slotter, the work must be so set that the center around which the radius is described is directly in the axis of rotation of the table, and the platen must then be adjusted so that the point of the tool is at a distance of 10 inches from the center. The feeding is done by rotating the platen slightly after each down stroke of the ram.

To aid in setting work having cylindrical surfaces, concentric circles are usually marked on the platen and may be used as a guide; or, a cylindrical stake may be fitted to the center hole of the platen and used to measure from. In either case, after the work is set, it is best to revolve it past the point of the tool to be sure that it is correctly set. This applies

to internal as well as external cylindrical surfaces. Locomotive axle boxes that are fitted with semicircular brasses represent a type of circular work that is readily performed on the slotter.

SLOTTER TOOLS.

54. Shape of Tools.—The tools used for the slotter are different in appearance from those used for either planer or shaper work. The cutting edge is formed on the end of the bar so that it cuts when pushed endwise, and it is therefore under compression. Fig. 22 (*a*) shows a forged roughing tool for the slotter. The shank is generally made square, and the end is forged so that it is about like a parting tool. The cutting face that turns the shaving is on the end.

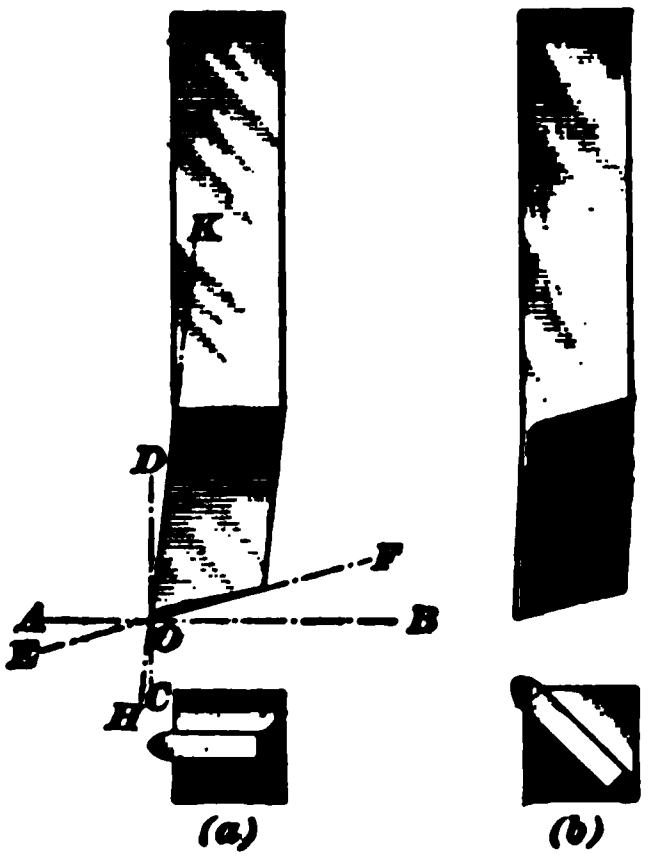

FIG. 22.

55. Angles of Rake and Clearance.—To show the **angles of rake and clearance** in this tool, draw the line *A B* in Fig. 22 (*a*) parallel to the top of the platen; draw *C D* perpendicular to *A B* at the point *O* of the tool; draw *E F* parallel to the face of the tool and *H K* parallel to the side of the tool. The angle *D O K* is the angle of clearance, and the angle *B O F* the angle of top front rake. It may be seen from this that these angles are measured at right angles to the direction in which they are measured on a planer, shaper, or lathe tool. When the slotter tool is carried at the end of the ram so that its shank is at right angles to the line of motion, the clearance angle and the angle of top front rake are measured in the same way as on a planer tool. When slotter tools are forged from the bar, they are made with narrow points for roughing cuts,

and wide points for finishing cuts, as is done in planer work. It is not possible, however, to use such coarse feeds for finishing work on the slotter as can be done on the planer.

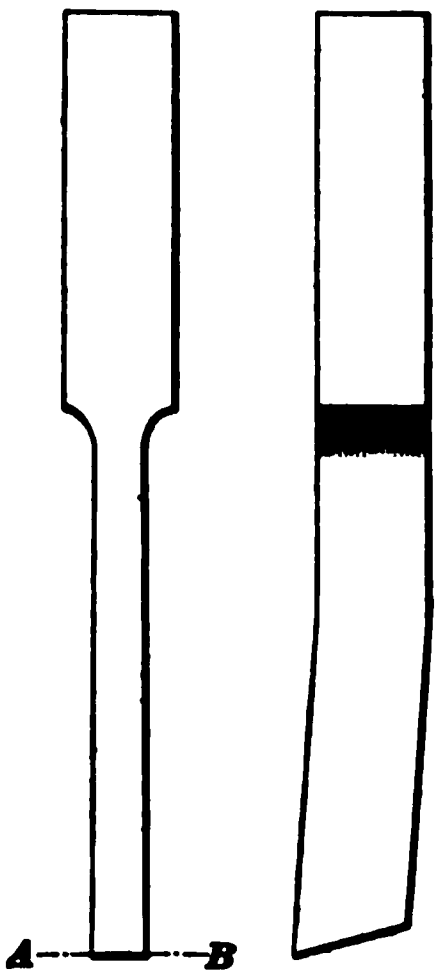

FIG. 23.

For the slotter, a good roughing tool for flat work may be forged with the blade diagonally across the shank of the tool, as shown in Fig. 22 (*b*).

56. Tools for Cutting Keyways. One of the functions of the slotter is to cut slots or keyways in the hubs of pulleys or in work of a similar nature. When the tools for cutting keyways are forged from the solid bar, they are shaped as shown in Fig. 23, the cutting edge being along the line *A B*. If the slots are long, it requires a long, slim blade to reach through the work. When such slim tools are used, they spring away from the work considerably, and, consequently, considerable time and care is necessary to complete the cut.

CUTTER BARS FOR THE SLOTTER.

57. The Bar.—Tools forged from the bar are not always the best form of tool to be used on the slotter. When the cuts are to be taken on the outside of a piece, it is much better to have a heavy **slotter bar** that will carry a smaller blade in the end attached to the head of the ram. Fig. 24 shows a very convenient form of slotter bar. The regular tool clamps are removed from the head and special clamps *B*, *B*, which are bored to receive the round bar *c*, are put in their places and held by the bolts *b*, *b*. These clamps are split at the outer end and the slotter bar is clamped in them by tightening the screws *a*, *a*. By having a round bar thus held, it can be turned so that the cutter blade may be set at any angle with the work. This form of bar is very convenient for planing slots or keyways, using a broad-nosed

blade of the desired shape and width. When a square hole is to be cut in a previously bored or cored piece, the bar may be turned around so that the blade in the end will come at the best angle for reaching into the corners.

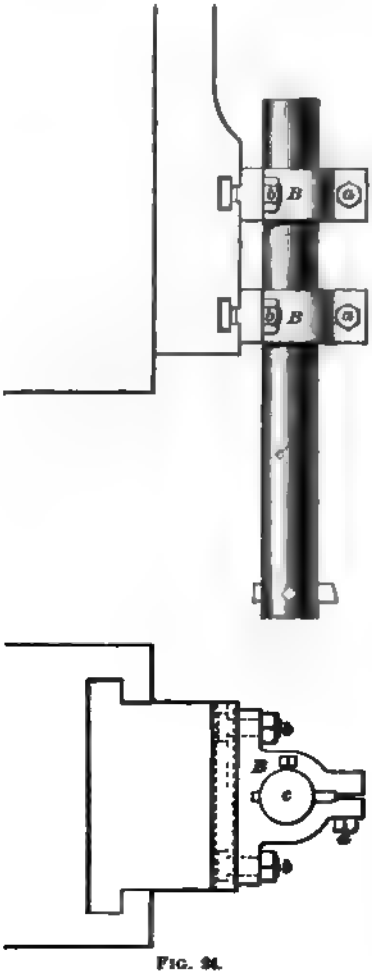

FIG. 34.

58. The cutter blades are rigidly fixed in the bar; consequently, on the return stroke they slightly drag over the work. When the tools are sharp, they cut true enough, however, not to spring the bar very much; in practice, the dragging does not interfere with the successful carrying on of the work unless the tools are given too much top rake, in which case they will break. The feeding of the work does not occur until the tool has returned to the top of the stroke and is therefore away from the work.

59. Slotter Bars With Tool Blocks.—Some heavy slotter bars are made with a tool block in the lower end that is pivoted in the same way that the tool block in the head of a shaper or planer is pivoted, so that on the return stroke the tool will lift away from the work and not drag. In such a bar, the weight of the tool and the block causes the tool to hang away from the work at all times, so that springs are necessary to hold the tool up to the work. These devices require attention,

or they will give trouble. If the spring should not hold the block quite up to its seat, or a piece of dirt should get under the block, as is often the case, the tool would not quite touch the work, and, when the work is fed close enough to catch the point of the tool, the tool block would be carried back at once to its place, which would cause the tool to gouge into the work.

EXAMPLES IN SLOTTER WORK.

60. Multiple Slotting. — It often happens that a number of pieces are to be finished to the same shape. If

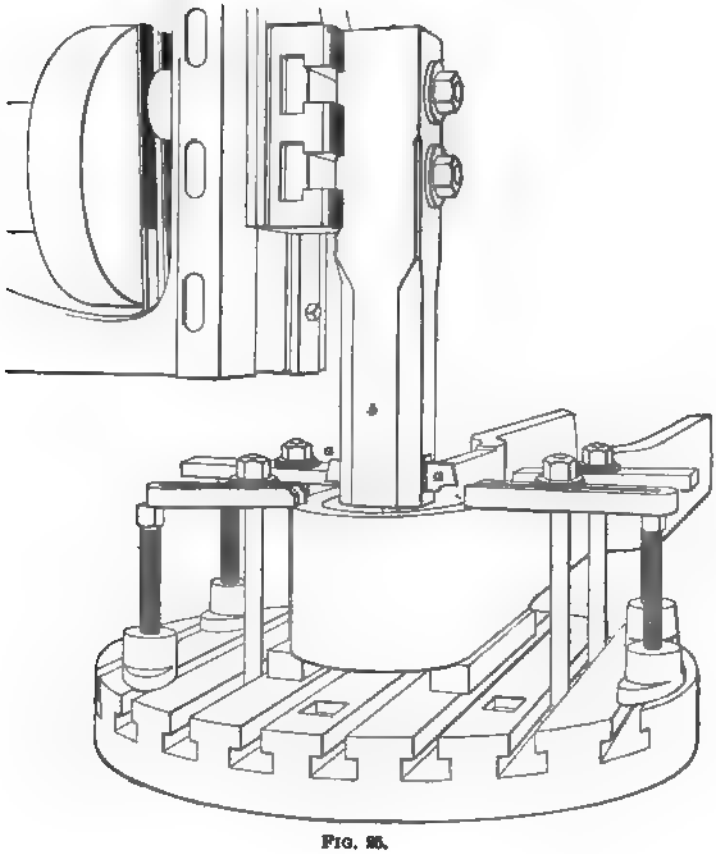

FIG. 25.

these pieces are thin, time may be saved by piling a number upon one another and clamping them all to the platen and then taking a cut over them all.

61. Taking Two Cuts at Once.—Fig. 25 shows a piece of work clamped to the platen and ready for the cut. The work is a U-shaped forging that is to be finished on its inside surfaces. The curved part of the piece has been bored to a diameter equal to the width between the surfaces when finished. A very heavy slotter bar *b* is used with a blade *a*, which projects at each side. This blade is made the correct length, and with cutting points at each end; when set so that it will just pass through the bored part, it is correctly set to take the finishing cut, which it does by cutting both surfaces at the same time.

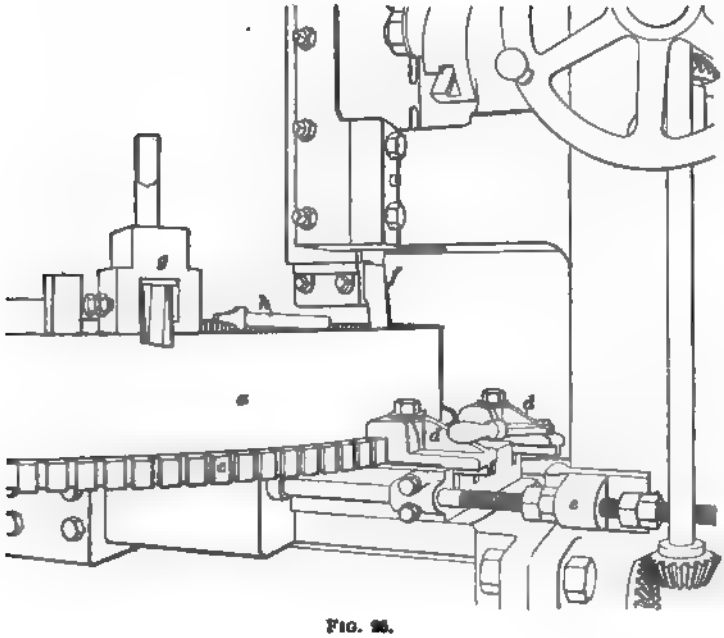

FIG. 25.

62. Gear Cutting on the Slotter.—The slotting machine is often used for special kinds of work. It is well

adapted for cutting internal gears or for cutting very large spur gears.

Fig. 26 shows a part of a slotter and a large internal gear that it is cutting. A part of the gear is shown at *a*. This rests upon a plate *c*, which has been accurately notched with as many notches in its periphery as there are teeth to be cut in the gear. The plate is fastened to the gear, and is mounted upon the platen of the slotter. Clamps *d*, *d* are fastened to the platen for clamping this index plate and for carrying the stop-pin that holds the index plate in place.

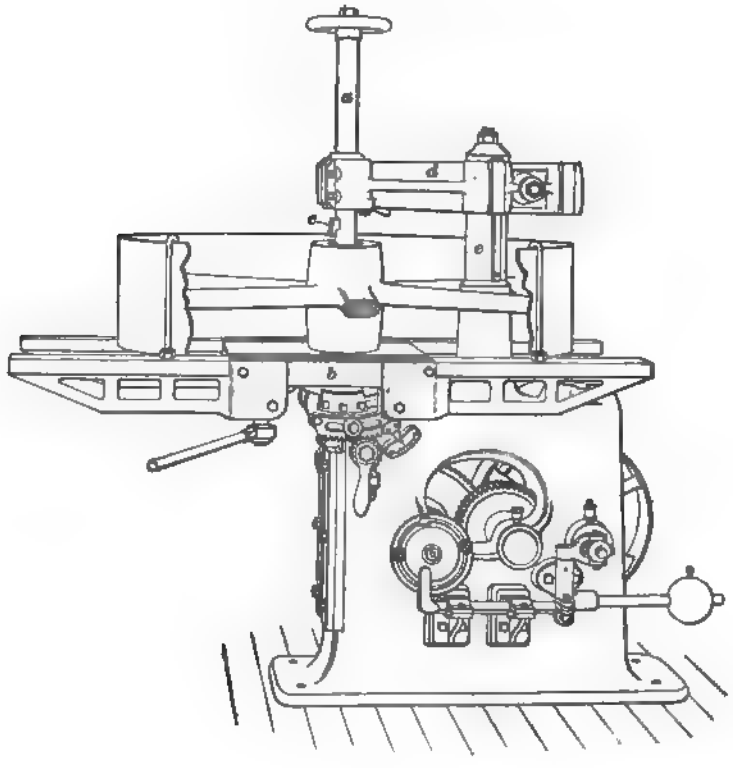

FIG. 27

A stop *e* with check-nuts on either side is used to regulate the depth of each tooth. The cutter or tool used for

this gear is carefully shaped to give the correct outline to the teeth. This cutter *f* is carried in a special block fastened to the end of the ram. A similar tool block *g* is seen resting on the gear blank, and also a tool *h*. As soon as one tooth space is cut, the stop-pin in the clamp *d* is pulled from the index plate and the blank is revolved until the stop-pin will slip into the next notch of the index plate. After clamping, a second notch is cut in the blank, and so on until all the teeth are finished.

63. Very large gears may be cut in this way when supported properly on bearings away from the platen, so that the edge of the blank rests on the platen and is free to slide on its outer support an amount equal to the depth of the tooth.

The action of the slotter is in so many respects similar to that of the shaper and planer that a thorough understanding of these will enable one in a short time to successfully handle the slotter.

KEYWAY CUTTERS.

64. Another form of machine similar to the slotter and the draw-cut shaper is the **keyway cutter.** This machine is especially designed for cutting keyways in the hubs of gears, pulleys, or similar pieces.

FIG. 26.

Fig. 27 shows a keyway cutter operating on the hub of a pulley, part of the rim being removed to show the hub. The cutter bar *a* is operated from beneath by a ram driven by gearing, in a manner similar to that in which a geared shaper is driven. A table *b* supports the work, which is fed automatically against the cutter *c* in the bar. The overhanging arm *d*, which is supported on the column *e*, gives support to the upper end of the cutter bar. The cutter bar is in two parts, which may be screwed together. Fig. 28 shows the parts

unscrewed, and also shows the method of clamping the cutter in the bar. The cutter passes through the slot *a* and is clamped by the setscrew *b*. These bars are made in various sizes to accommodate different sizes of work.

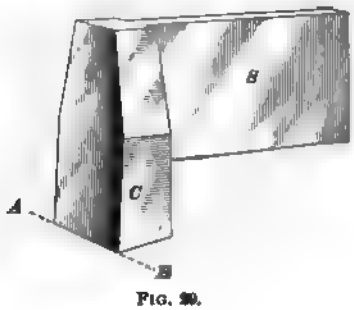

FIG. 29.

65. Fig. 29 shows a cutter for cutting a keyway. The shank *S* fits the cutter bar, while the part *C* does the cutting, the cutting edge being along the line *A B*. These cutter blades are accurately made of different widths for

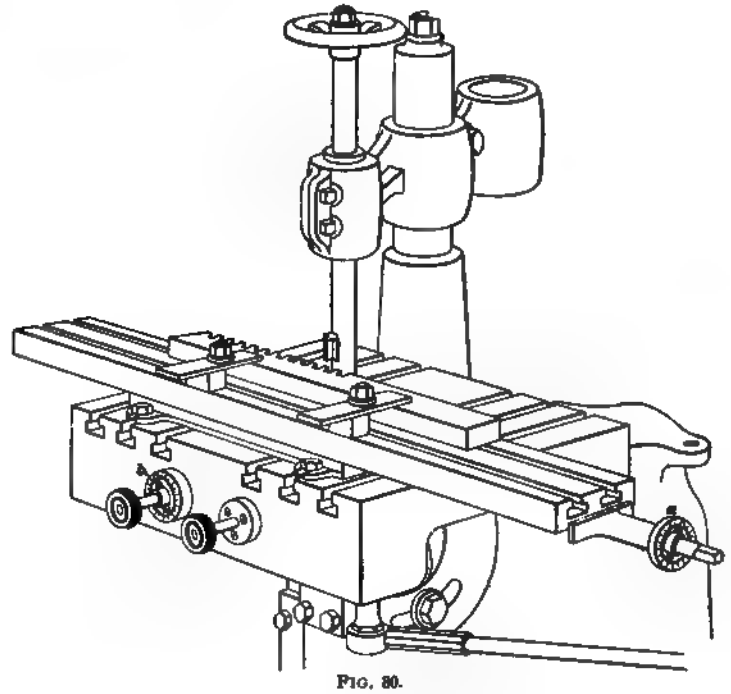
FIG. 30.

different widths of keyways. When sharpened, the sides are not ground, the grinding being done upon the bottom face.

66. While these machines are particularly designed for a certain line of work, it is possible to do some other kinds of work with them. Fig. 30 shows how racks may be cut with the aid of a special fixture. When racks are thus cut, the cutter blade is carefully shaped to give the desired outline to the teeth. The graduated feed-screw *a* is used to indicate the distance to be moved for spacing each tooth, while the cross-feed dial *b* indicates the depth cut.

By the use of specially formed cutters and special adjustments, some other kinds of work may be performed, but the machine does its best work when doing that for which it was designed.

DRILLING AND BORING.

(PART 1.)

DRILLING.

HISTORICAL.

1. Prehistoric Drill.—The principle of drilling holes by means of a revolving tool was known in prehistoric time. The form of machine used was a type of bow drill, which is still found in some smaller manufacturing and repair shops. The primitive drill may still be seen among the Pueblo Indians in the form shown in Fig. 1. A round piece of hard wood *a* is split at the bottom and a piece of flint or iron *b* inserted and bound into place; the point of the drill is formed with scraping edges. The upper end of the stick is pointed and, when drilling, rests against a flat stone or piece of wood *c*, which has a slight depression in it to receive this point. The drill is rotated by means of a bow, the string of which is given a single turn around the stick, as shown. To operate the drill, the piece *c* is held in one hand, thus furnishing the

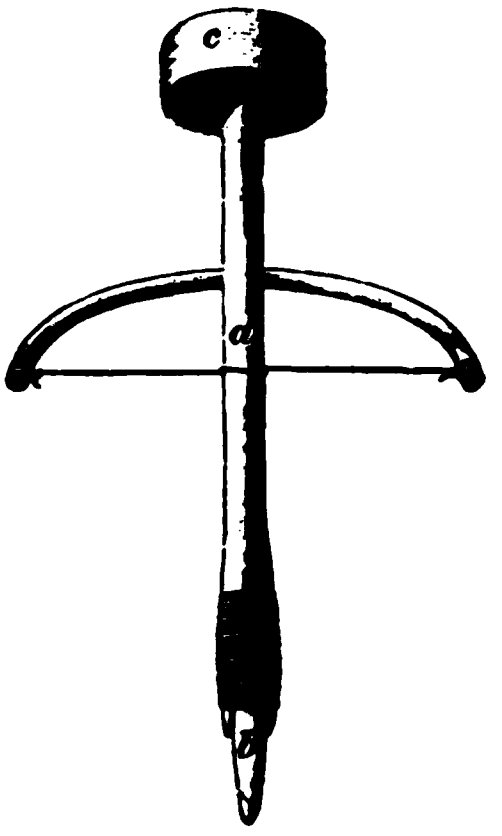

FIG. 1.

Copyright, 1901, by THE COLLIERY ENGINEER COMPANY.
Entered at Stationers' Hall, London.
All rights reserved.

necessary pressure and giving the proper direction, while, with the other hand, the bow is drawn back and forth, rotating the drill alternately in opposite directions. This instrument, in hands that are skilled in its use, has produced marvelous results. Beads, shells, etc. are drilled in a manner that produces the highest admiration for these primitive workmen.

DEVELOPMENT FROM THE LATHE.

2. Prehistoric Lathe.—The modern machine-shop drill has its origin in the **lathe,** from which all other forms of machine tools have been developed.

The lathe, in a very primitive form, was known in prehistoric time. Its earliest form consisted of a piece of wood supported horizontally upon two wooden pillars and rotated by means of a string. The material to be worked was attached to this revolving part, which moved in opposite directions as the string was wound or unwound. As the tool could cut only while the work was running in one direction, it had to be withdrawn and brought up alternately as the direction of motion changed.

3. Development of Modern Drill.—While the principle of the lathe is very old, it was not until a comparatively recent date that power was applied to it, and the modern shop tool, which rotates continuously in one direction, was developed. It was some time after the power lathe had made its appearance that the drilling machine was brought into use.

The step from the lathe to the drilling machine was simply a change in the arrangement of the head. In the lathe, the piece to be worked is usually rotated with the spindle, while the cutting is done with a fixed tool. In boring holes, the tool may be rotated with the spindle, while the part to be drilled is pressed against it. When used in this way, the lathe is a drilling machine with a horizontal spindle, and the only difference between the lathe when

thus used and the ordinary drilling machine is that, in the latter, the spindle stands in a vertical position and the work is supported upon a horizontal table.

ESSENTIAL PARTS OF DRILLING MACHINES.

4. Essential Parts.—The modern drilling machine consists of a revolving spindle to which a device for holding the tool is attached, a table upon which the work is supported, and a device for feeding the tool into the material to be drilled.

5. Arrangement of Parts.—The arrangement of these parts is shown in Fig. 2. In this simple drilling machine, the spindle *a* is held in a vertical position by a frame *b* and column *c*. The spindle is rotated by means of a belt running on a pulley *d*, which is connected to the upper end of the spindle by means of a spline. The pulley is held vertically between the two arms *e* and *f*, thus permitting the spindle to slide in the pulley while turning. The tool *h* is held in a chuck or socket *g* on the lower end of the spindle and moves vertically and rotates with the spindle. The part to be drilled is held upon the table *i*.

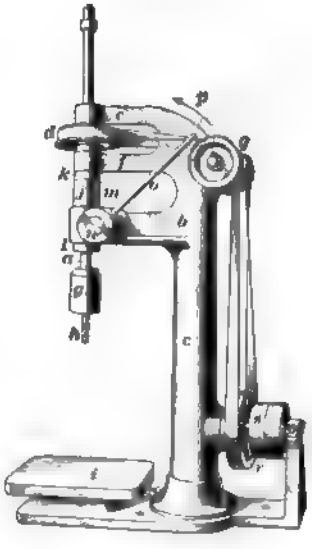

FIG. 2.

The principal parts of the drilling machine have been mentioned, but it is still necessary to devise some means for feeding the tool through the material. This is usually done by lowering the tool as it cuts its way; although, as will be seen later, in a few cases the table is raised while

the tool is held in a fixed position. Fig. 2 shows a very simple method by which the spindle may be raised or lowered by means of a hand lever. The spindle is made to revolve in a sleeve *j* and is held vertically in it by means of the collars *k* and *l*, which are fixed to the spindle. The sleeve has a rack *m* upon its outer side, which engages with a pinion upon the inner end of the shaft *n*. This shaft has its bearing in the lower arm of the frame *b*, and carries upon its outer end a hand lever *o*. The sleeve is free to move in a vertical direction as the pinion is turned by means of the lever, but it is kept from rotating by the rack. The spindle is lowered by moving the lever in the direction of the arrow *p*, thus rotating the pinion and carrying down the rack with which it engages.

The machine receives its power from a belt running from the pulley *d* over a pair of idlers *q* to the pulley *r*. Attached to *r* is another pulley *s*, which is belted to a countershaft. Every part of a drilling machine should be as rigid as possible, as a very slight spring in any of the parts causes inaccuracies in the work.

PRINCIPAL FUNCTIONS OF DRILLING MACHINES.

6. Purpose of Drilling Machines.—The **drilling machine** was brought into use primarily for the purpose of sinking circular holes into a solid body, which is called **drilling**; but with its development it has been found that it can be used advantageously for other operations, such as *reaming*, *countersinking*, *counterboring*, *spot facing*, *tapping*, *center drilling*, etc.

7. Causes of Irregularity in Drilled Holes.—The varying hardness of the metal, blow holes in castings, and slight imperfections in the formation of the tool tend to make a drilled hole imperfect. Sometimes the hole is not quite straight, or it may not be quite round, or the surface may be rough.

8. Reaming. — In order to overcome these defects where absolute accuracy is necessary, another tool, called a **reamer,** is passed through the hole. This operation is known as **reaming.**

9. Countersinking.—In other cases, it is necessary to enlarge the upper end of the hole, as shown in Fig. 3 (*a*). This is known as **countersinking.**

FIG. 3.

10. Counterboring.—When the sides of the enlarged hole are carried down straight and a shoulder is formed at the bottom, as shown in Fig. 3 (*b*), the operation is called **counterboring.**

11. Spot Facing.—When it is necessary to finish a body of metal only a small distance about a drilled hole, to form a smooth surface for the head or nut of a bolt, or a bearing

FIG. 4.

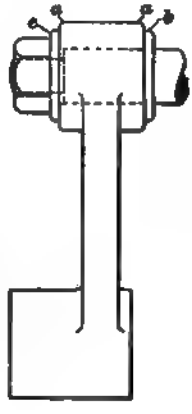

FIG. 5.

for the hub of an adjacent part, it is called **spot facing,** as, for instance, the bearings for the nuts *a*, *a* on the cylinder head, Fig. 4, are produced by facing the spots *b*, *b*.

12. Facing.—When the ends of hubs are finished with a revolving cutter, it is simply called **facing,** as, for instance, in the case of the rocker-arm in Fig. 5, where the surfaces *a*, *a* are faced to receive the pin *b* and washer *c*.

13. Tapping.—When internal screw threads are cut in a piece of metal, the operation is called **tapping.** The hardened-steel screw, which is grooved or fluted longi-

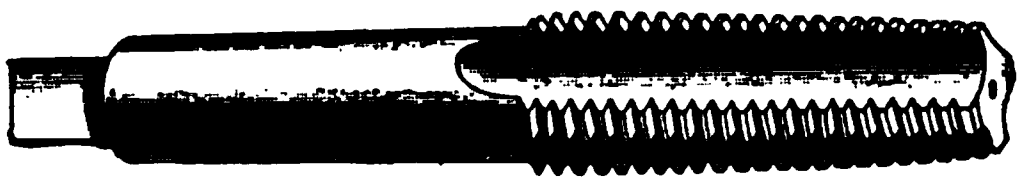

FIG. 6.

tudinally, as shown in Fig. 6, and with which the thread is formed, is called a **tap.**

14. Center Drilling.—When a center in a piece of lathe work is formed with a drill and reamer, it is called **center drilling.**

FORMS OF TOOLS AND THEIR USES.

DRILLING TOOLS.

15. Classes of Drills.—The drill, which is one of the most largely used tools found in a machine shop, is made in a number of forms, which may be classified under the two heads *flat drills* and *twist drills*.

16. Common Characteristics.—These different forms have three essential characteristics that are common to all. *First*, there must be one or more cutting edges that separate the small particles of material from the body either by scraping or cutting. *Second*, there must be a central leading point about which the cutting edges revolve and which guides the drill through the material. This is obtained by tapering the cutting edges toward the center,

as shown in Fig. 7. The angle *a* of this taper varies for different classes of work, but for ordinary drilling it is made between 50° and 60°. The Morse Twist Drill Company recommends 59°, while Wm. Sellers & Co. recommend 52°. *Third*, there must be a clearance back of the cutting edge. Fig. 8 represents the point of a flat drill, in which *b* is the *clearance angle*, sometimes called the *angle of relief*. This angle should

FIG. 7.

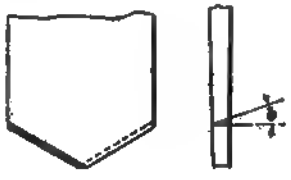

FIG. 8.

be large enough so that the stock back of the cutting edge will clear at all times.

17. Early Form of Drill.—The earliest form of machine-shop drill consisted of a flat piece of steel drawn down

FIG. 9.

FIG. 10.

flat at one end, as shown in Fig. 9, and ground to the desired shape. This class of drill is still largely used in various forms and is known as the **flat drill.**

18. Double Scraping Edge.—The form used in the bow drill is shaped as shown in Fig. 10. The edges are beveled on both sides, thus permitting the drill to be rotated in either direction while both edges cut equally well. This form is still used by watchmakers for drilling small holes with a drill that runs backwards and forwards alternately. One great objection to this drill lies in the shape of the cutting edges and the corners at the outer end of the cutting edges. The metal is removed by scraping rather than by cutting, and a heavy pressure is required to make it work satisfactorily. These conditions wear the scraping edges so that frequent grinding is necessary, and every time the tool is ground, the width across the flat part is reduced, thus reducing the diameter of the hole it will drill. This difficulty may be overcome by making the sides parallel for a short distance above the outer corners, as shown in Fig. 11. The parallel sides also form guides for the drill, thus insuring a straighter and better hole.

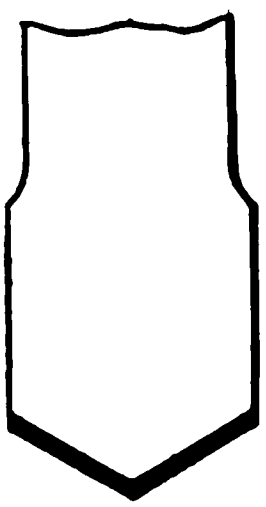

FIG. 11.

19. Single Cutting Edge.—Another form of drill that may be revolved in either direction is shown in Fig. 12. It is made from a round bar by grinding one end to a cone of the required taper and grinding away one side to the center line, as shown. This drill has the disadvantage of cutting on only one edge at a time, but the angle of the edge is such that it cuts more freely than the scraping edges. The parallel sides guide the drill very accurately and a fairly straight and round hole of the same diameter is formed, no matter how often the drill may be ground. These two types of drills, however, are seldom used in the modern machine shop, as other types that will cut when revolving in only one direction have been found more efficient.

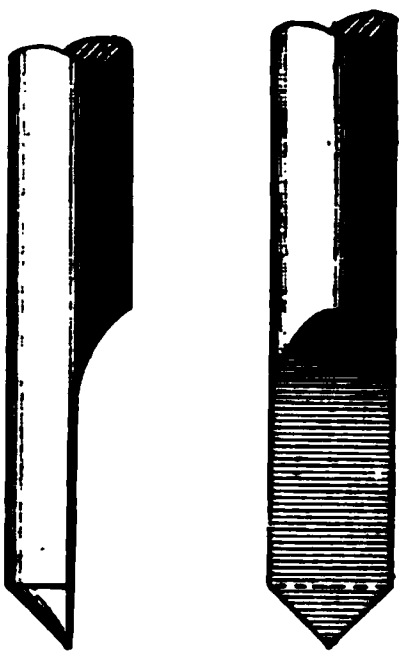

FIG. 12.

MACHINE-SHOP DRILLS.

FLAT DRILLS.

20. Form of Drill Point.—The simplest and most cheaply made machine-shop drill is the ordinary **flat drill** shown in Fig. 13. When rightly formed, this type of drill does very excellent work. It is, however, a hand-made tool and is often so poorly formed and so imperfectly ground that its work is not satisfactory.

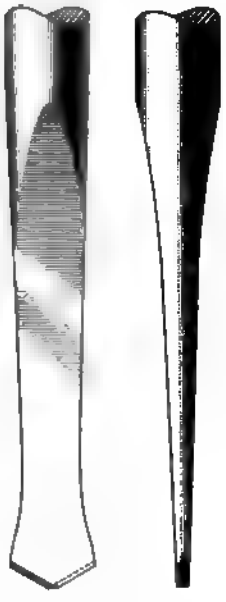

FIG. 13.

In order that a drill may cut equally on both sides and form a smooth, round hole, the point must be in the center, the cutting edges must make equal angles with the center line, and must be of the same length and have equal clearance angles.

21. Results of Improperly Formed Drills.—All these requirements must be carefully observed. It is not sufficient to have the point in the center of the drill, because different angles of the cutting edges will cause the drill to cut on one side only, as shown in Fig. 14 (*a*), thus throwing twice the intended depth of cut upon the one cutting edge. It also causes a crowding against one side, and a tendency to throw the center of the drill out of its correct position. The angles which the cutting edges make with the center line may be equal, but if the lengths of the cutting edges are not equal, it will result in the condition shown in Fig. 14 (*b*). The hole will be larger than the drill, and the outer end of the long side of the cutting edge must do double duty, which soon dulls it, causes crowding, and makes a rough hole.

When both the angles with the center line and the lengths of the cutting edges are unequal, the hole will be larger

than the drill, and the effect will be as shown in Fig. 14 (*c*). All the work will be done by the short side and the outer end of the long side. Unequal clearance angles will cause one side to cut more freely than the other, thus distributing the work unequally. Under a given pressure, the side with

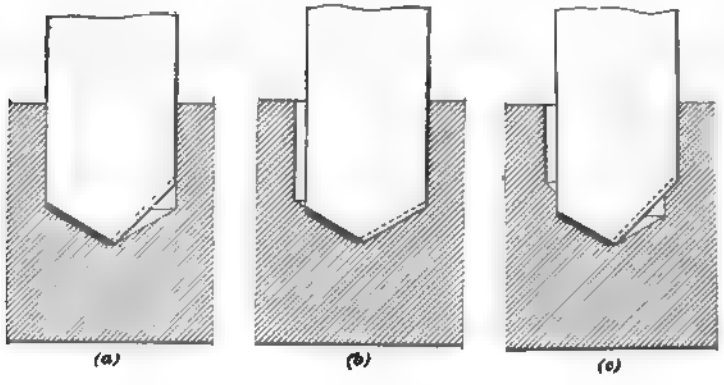

FIG. 14.

the greater clearance angle tends to take a deeper cut than the other, while there is less metal to support its cutting edge. This edge wears away more rapidly than the other, resulting in unsatisfactory working conditions.

22. Symmetrical Cutting End.—*The cutting end of a drill must be symmetrical in every respect* in order to do accurate work. It should also be as thin at the point as the material to be drilled and the size of the drill will permit. A careful examination of flat-drill points will show that the cutting edges *a b* and *c d*, Fig. 15, stand on opposite sides of the center line. When the clearance angles are equal, the two planes representing the clearance angles will intersect in the line *b d* perpendicular to the axis of the drill.

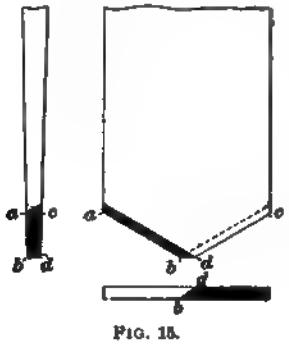

FIG. 15.

23. Advantages of Thin Point.—It will readily be seen that the cutting edges extend only to *b* and *d*, and between these two points the edge has equal clearance on both sides, producing an edge resembling that of a cold chisel. When rotated, it is simply a scraping edge, and the pressure required to force it through the metal at the rate at which the drill should cut is very great compared with the pressure required upon the cutting edges proper. This scraping edge also wears away very quickly, which necessitates additional pressure. It becomes evident, then, that, in order to do the work with the least loss of power, the scraping edge *b d* must be made as short as possible. This is accomplished when the point is made very thin.

On the other hand, when it is made too thin, the cutting edges are not supported sufficiently well, and break away, making frequent dressing and grinding necessary. No definite rule for the thickness of the point can be given, since it depends largely on the grade of steel used in the tool and the quality of the material to be drilled. Experience and care in observing the action of the drill and the working conditions alone will enable one to determine the correct thickness.

24. Grooved Drill Point.—Sometimes grooves are formed in the end of the drill, as shown in Fig. 16, thus providing curved cutting edges, which, when properly shaped, remove almost entirely the scraping edges. This practice, however, tends to weaken the inner ends of the cutting edges by removing the supporting metal, and it is generally thought to be better simply to make the end of the drill as thin as practicable.

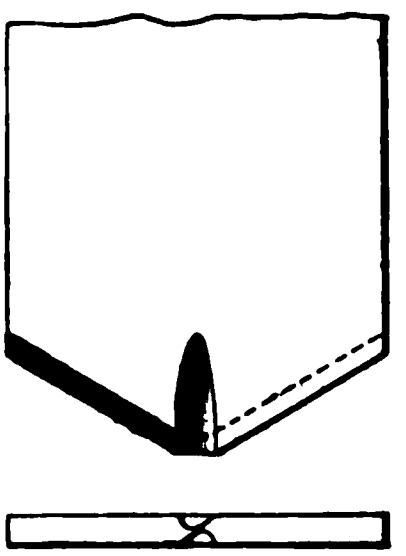

FIG. 16.

25. Parallel Sides.—Flat drills, to give the best results, should have the sides *a b*, Fig. 17 (*a*), parallel, $\frac{1}{2}$ inch or more above the cutting edges. This parallel portion should be rounded to fit the circumference of the hole. Drills are often used

with the corners projecting beyond the body, as shown in Fig. 17 (*b*), and with the sides beveled, as shown in Fig. 17 (*c*). Drills formed in this way make ragged holes, and when there are soft or hard spots or blow holes in the material drilled, they run off to one side, making holes that are neither straight, round, nor smooth. The simple precaution of making the sides parallel for a short distance and rounding the edges to fit the desired hole, as shown in Fig. 17 (*a*), will, when the point is rightly formed, obviate this difficulty almost entirely.

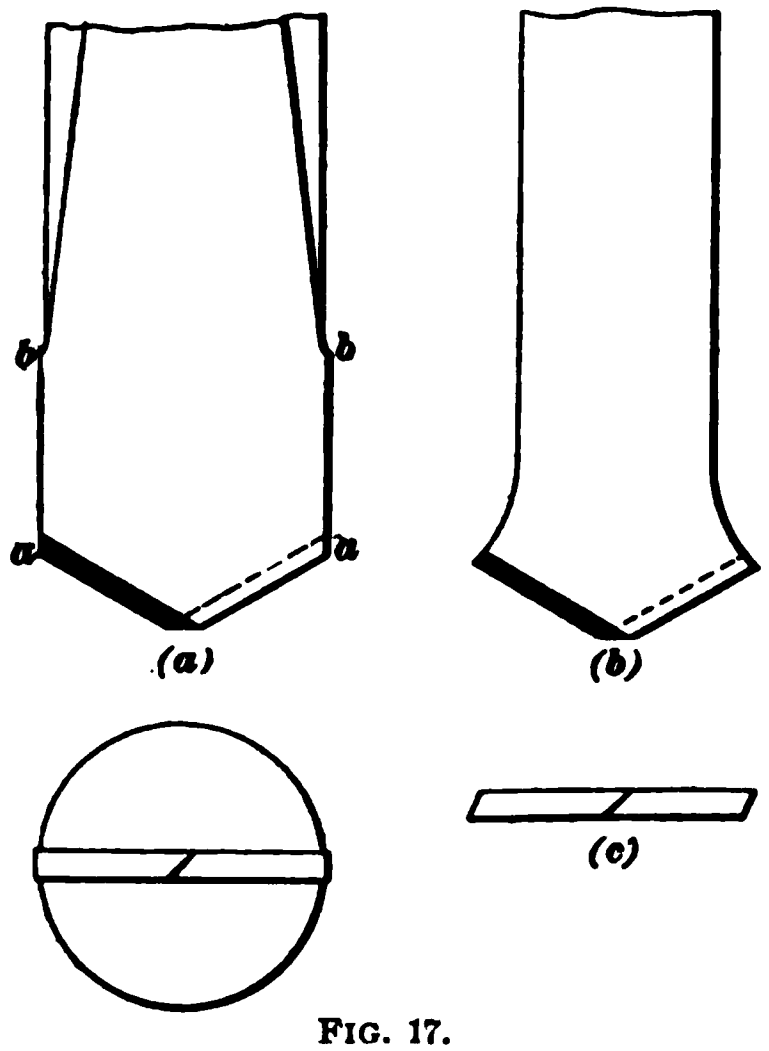

FIG. 17.

26. Drill Shank.—The portion of the drill between the flattened part and the upper end is called the **shank.** It should be somewhat smaller than the hole, in order to work freely in it. In the case of comparatively shallow holes, the flat part should extend to a point high enough so that the cuttings or chips can work out. The shank should be round. The corners of any angular section draw the chips under them and clog the drill. Even with a round shank and a perfectly formed drill, there will be more or less clogging in a deep hole, and it is often necessary to back out the drill and remove the cuttings.

27. Lipped Drills.—In the kind of drill just considered, the front of the cutting edge is either perpendicular to the direction of travel, as shown in Fig. 18 (*a*), or, if the drill is tapered toward the point, it may have a slight negative front rake, as shown in Fig. 18 (*b*). In order to gain the advantage of a better cutting edge, a groove is

sometimes ground above the cutting edge, as shown in Fig. 19 (*a*). A section through *c d* is shown in Fig 19 (*b*).

The same end may be accomplished by dressing the drill with the cutting edge lipped, as shown in Fig. 19 (*c*). Fig. 19 (*d*) shows a section through *e f*. In both of these cases, care must be taken to leave enough metal back of the cutting edge to withstand the cutting strain.

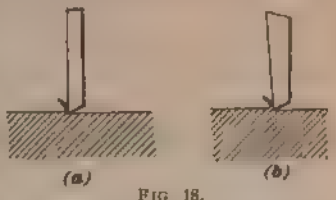

FIG 18.

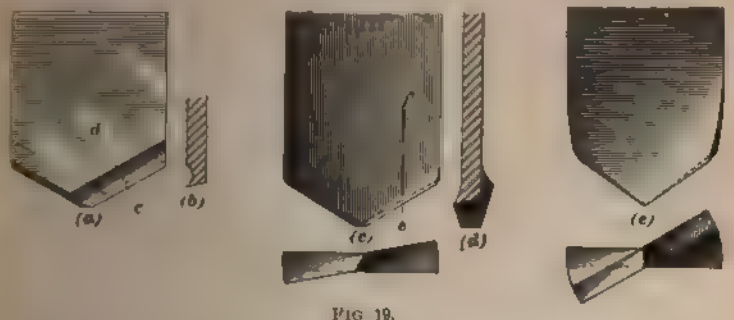

FIG 19.

28. Twisted Flat Drills.—One disadvantage in both of these drills is that the grinding reduces the lip, and it is necessary to have them dressed oftener than the ordinary flat drill. This objection may be overcome by twisting the end of the drill into a spiral, as shown in Fig. 19 (*e*) In this way, the same angles of the cutting edges may be obtained, while the shape is not altered by grinding, until the entire spiral is ground away. The spiral also assists in carrying the cuttings away from the drill point.

TWIST DRILLS.

29. Commercial Twist Drills.—These advantages have led to an almost universal use of the **twist drill**, as the **commercial spiral drill** is called. Fig. 20 (*a*)

illustrates an ordinary commercial drill of this type. It is made from round stock, the spiral flutes being cut with a milling cutter. The surface between the flutes is backed off slightly from near the cutting edges *a*, *a*, Fig. 21 (*a*), to the backs *b*, *b* of the other flutes, leaving only narrow strips *a c* the full diameter of the drill. This is done to reduce the bearing surface on the side of the hole, while enough surface is left to form a perfect guide, owing to the fact that the bearing *a c* runs in a spiral around the drill.

FIG. 20.

In some drills a narrow bearing strip is left, as shown in Fig. 20 (*b*), the clearance being cut away, concentric with the bearing surface, as illustrated in Fig. 21 (*b*). Twist drills are manufactured in such a large variety of sizes, are found so efficient, and can be bought at such a small cost that they are rarely made in the tool room.

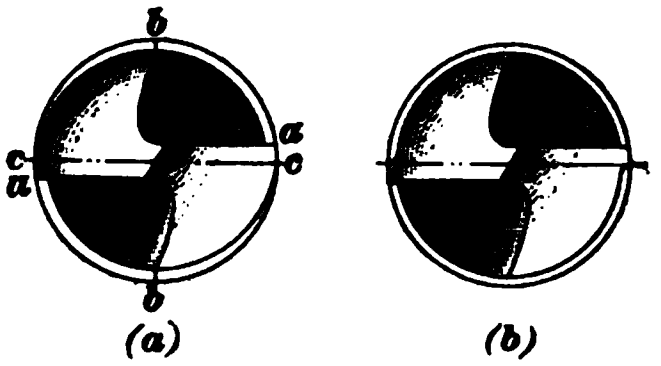

FIG. 21.

30. Precautions in Grinding.—The irregularities that arise from imperfect grinding, which have been mentioned in connection with the treatment of the cutting edges of flat drills, are applicable to the twist drill as well. The dangers suggested are, however, almost entirely overcome by the use of special grinding machines.

STRAIGHT-FLUTED DRILLS.

31. A **straight-fluted drill** has been found very serviceable for drilling thin plates and brass. With a twist drill there is a tendency to plunge forwards as the drill

comes through the plate. This is overcome by having a drill formed like the twist drill, but with straight instead of spiral flutes, as shown in Fig. 22.

FIG. 22.

SLOT AND TEAT DRILLS.

32. Forms of Slot Drills.—In drilling machines where a feed perpendicular to the center line of the spindle may be secured, **slot,** or **keyway,** drills are often used. These are made in a number of different forms. In Fig. 23, (*a*), (*b*), (*c*), and (*d*) show four different kinds, all of which are quite satisfactory in metal of uniform hardness.

33. Advantages of Some Forms. — In sinking these drills into the metal, holes are formed as shown in Fig. 23 (*e*), (*f*), (*g*), and (*h*). The central cores in Fig. 23 (*e*) and (*f*) form guides for the drill, which, in metal of varying hardness, have been found of great advantage.

Slot drills are used largely in forming keyways, or slots, in shafts. They are sunk into the metal a sufficient depth for a longitudinal cut and are then fed

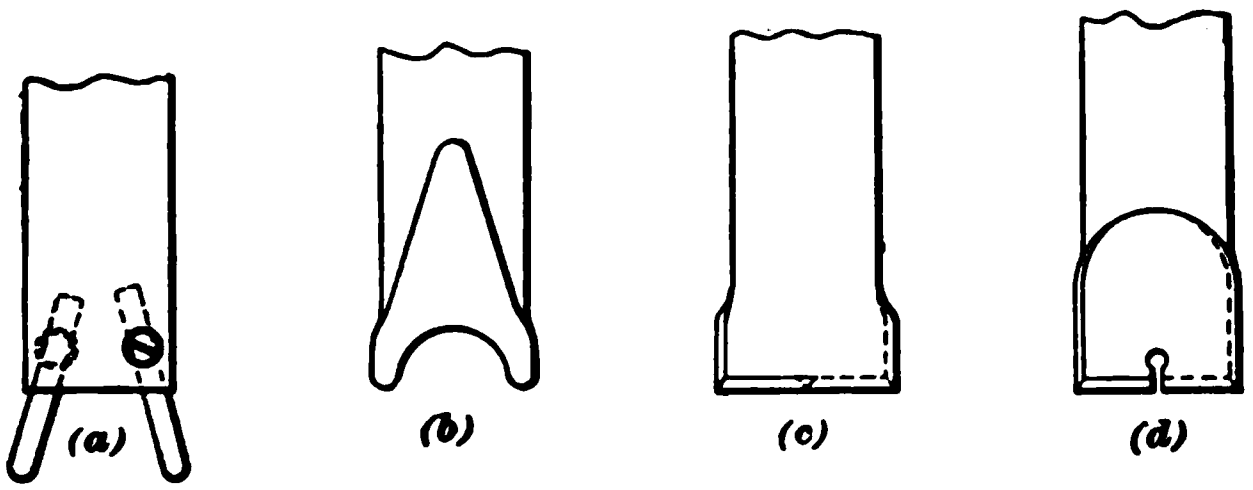

FIG. 23.

lengthwise along the shaft, thus cutting out the metal to

this depth throughout the entire length of the slot. The drill is then lowered enough to furnish another longitudinal cut and the operation is repeated until the required depth is obtained.

34. Teat Drills.—The drills shown in Fig. 23 (*c*) and (*d*) may be used in squaring the bottoms of holes made by an ordinary twist drill at the ends of keyways to be planed or chipped. The **teat drill,** shown in Fig. 24, is used for this same purpose, but may be used for drilling the entire depth of the holes required. The teat *a* is ground to a point, being tapered in both directions, and acts as a guiding point for the drill. The cutting edges are of the same form as those shown in Fig. 23 (*c*) and (*d*).

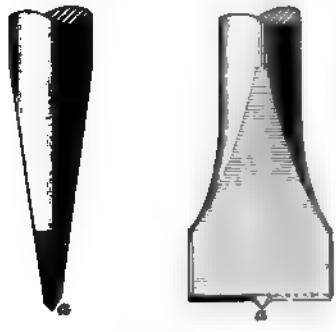

FIG. 24.

ANNULAR CUTTERS.

35. Single Tool.—An **annular cutter** that is used very generally for removing large bodies of metal and cutting large holes in boiler plates, rod ends, etc. is shown in

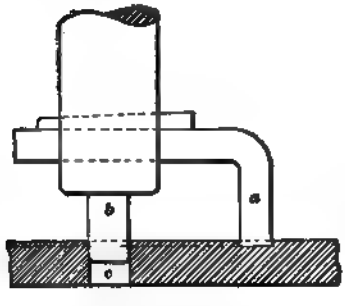

FIG. 25.

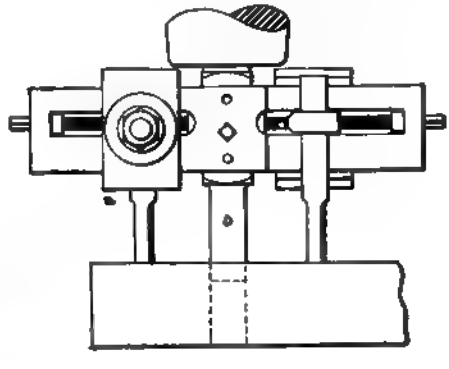

FIG. 26.

Fig. 25. The tool *a* is practically a cutting-off tool, with the proper side rake to clear the circular sides of the hole. A hole *c* is first drilled for the guide pin *b*, after which the stock around the hole *c* is removed as a washer with a hole in the center.

36. Double Tool.—Sometimes two tools are used, one on each side of the center, as shown in Fig. 26. This balances the side thrust upon the center pin *b* and reduces it to a minimum, besides doubling the capacity of the tool.

37. Spring Center.—In light work, such as cutting holes in boiler plates, the necessity of drilling the center hole may be avoided by using a tool like the one shown in Fig. 27. The center pin rests in a punch mark, thus forming a guide for starting the cutting tools, while a spring that acts upon the end of the pin permits it to recede as the tool travels through the plate. This device operates very nicely in comparatively small holes in light plates, but for large holes or very heavy stock a solid center pin, running in a drilled hole, is necessary.

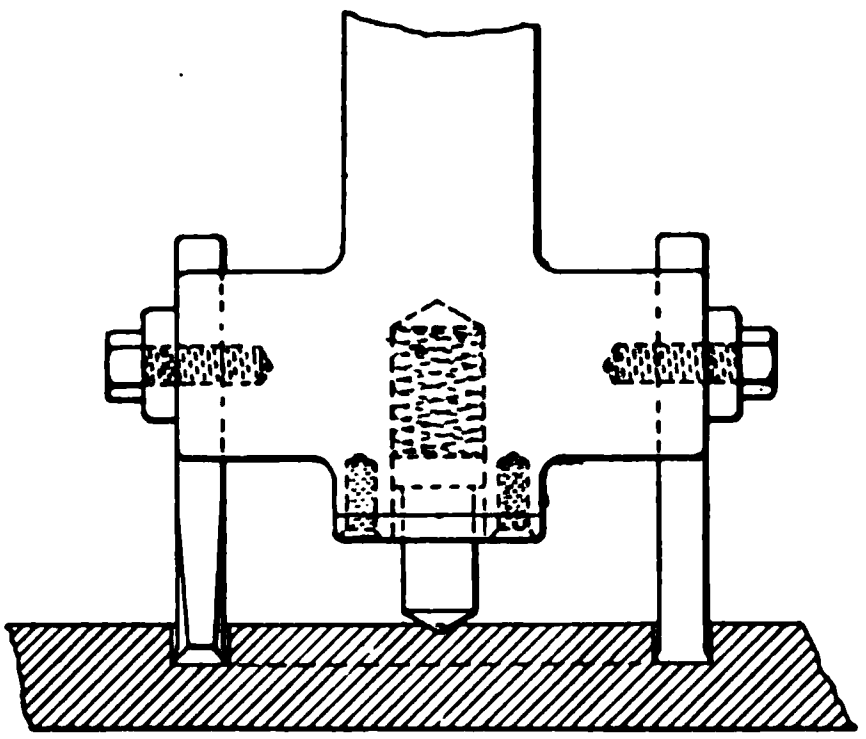

FIG. 27.

DRILL SHANKS.

38. Straight Shank.—On ordinary flat drills, the shanks shown in Fig. 28 (*a*) and (*b*) are most commonly used. In Fig. 28 (*a*) the shank is straight and slightly flattened at *a* in order to furnish a good bearing for the setscrew. The end of the screw often cuts a burr at the bearing point, which prevents the easy removal of the drill, and to avoid this the shank may be turned down slightly at the bearing

point of the screw, as shown at *a*, Fig. 28 (*b*). The shoulder also prevents the tool from dropping out of the socket when the screw becomes slightly loose.

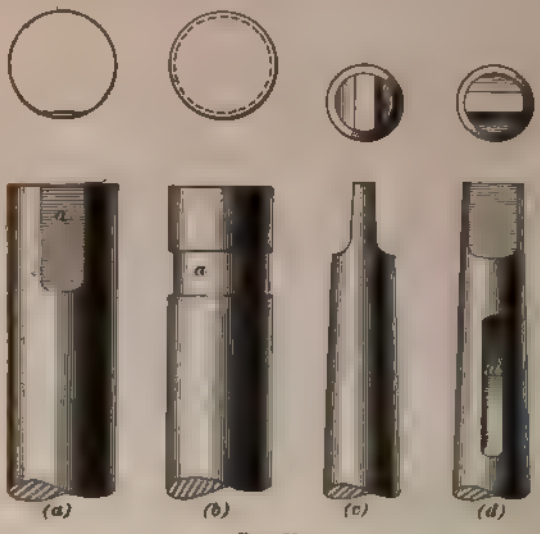

FIG. 28.

39. Taper Shank.—Fig. 28 (*c*) and (*d*) shows the shank tapered. The taper is so made that it will hold the drill from dropping out of the socket, while the flat end, or *tang*, at the top, which fits into the hole in the socket, prevents the drill from turning in the socket. There are several tapers used by different makers of drills. The Morse Twist Drill Company uses a taper of about $\frac{5}{8}$ inch to the foot. Some makers have a key inserted in the socket to assist the tang in preventing the drill from turning. This calls for a corresponding keyway in the drill as shown at *a*, Fig. 28 (*d*).

LUBRICATION OF DRILLS.

40. Requirements.—Cast iron and brass are drilled without lubricating the drill point; in fact, in cast iron a lubricant causes the fine cuttings to cake and choke the

drill. In drilling wrought iron and steel, on the other hand, the drill point should be thoroughly lubricated.

41. Application of Lubricants.—The lubricant is usually applied by dropping it into the hole and permitting it to run down along the sides of the hole and the drill. This method has been found rather unsatisfactory, as the cuttings, in working their way to the surface, tend to carry the lubricant up, and in some cases very little, if any, reaches the drill point where it is most needed.

Fig. 29 (*a*) shows a very simple method by means of which better lubricating conditions are obtained. Two spiral grooves *a*, *a* are cut parallel with the flutes *b*, *b*, thus forming separate channels for the lubricant. There is some danger of these grooves becoming clogged by fine particles that work around the drill, and small brass tubes are brazed into the grooves as shown, in order to insure an unobstructed flow. Fig. 29 (*b*) shows a drill with holes running through the solid metal.

FIG. 29.

42. Provision for Supplying Lubricants.—The lubricants may be carried to the holes in the drill through the chuck or through a small attachment placed just below the chuck. Fig. 30 illustrates an attachment that is frequently used. A collar *a* is fitted to

FIG. 30.

the lower end of the drill socket, as shown, and is kept from

revolving with the spindle by means of a pipe that rests against the column of the machine and through which the oil is conveyed to the collar. Inside of the collar, and immediately over a pair of holes in the socket that correspond to the upper holes in the drill, a circular groove *b* is turned, thus forming a connection between the outer pipe *c* and the drill. The oil is supplied by means of an oil pump, under sufficient pressure to insure a steady flow to the drill point, and is carried to the attachment by means of a flexible tube.

REAMERS.

43. Purpose of Reamers.—Drilled holes are rarely formed perfectly round or straight, and with each grinding of the drill, especially when the grinding is done by hand, the diameter is liable to vary slightly. It is therefore necessary, in work where accuracy is required, to true the hole. This is done by passing a tool called a **reamer** through it.

44. Flat Reamers.—Reamers are made in various forms. The simplest of these consists of a flat piece of steel turned accurately to the diameter of the hole, with the cutting edges shaped much like those of the ordinary twist drill, but with a greater angle between the cutting edges. Fig. 31 illustrates this type. It is used frequently because of its cheapness, but despite its cheapness it is not an economical tool, as it does not produce a hole of sufficient accuracy for the better grades of machine work.

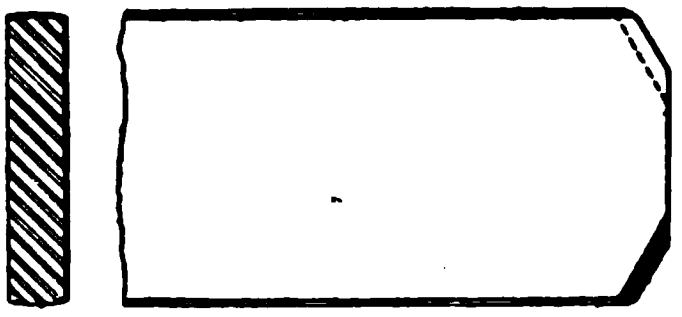

FIG. 31.

45. Fluted Reamers.—A better type of reamer is shown in Fig. 32. It consists of a piece of round steel with flutes cut lengthwise. For the general run of work, the

flutes are so shaped that the cutting faces lie in radial planes, as shown in Fig. 33 (*a*).

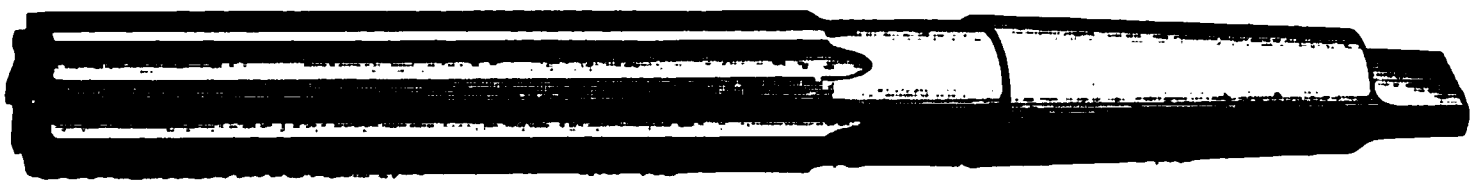

FIG. 32.

46. Undercut Faces.—Fluted reamers are sometimes made with the cutting faces cut under, as shown in Fig. 33 (*b*). This is not right, as the slightest spring causes the cutting edges to run more deeply into the metal, resulting in an injured or enlarged hole, and sometimes in a broken reamer.

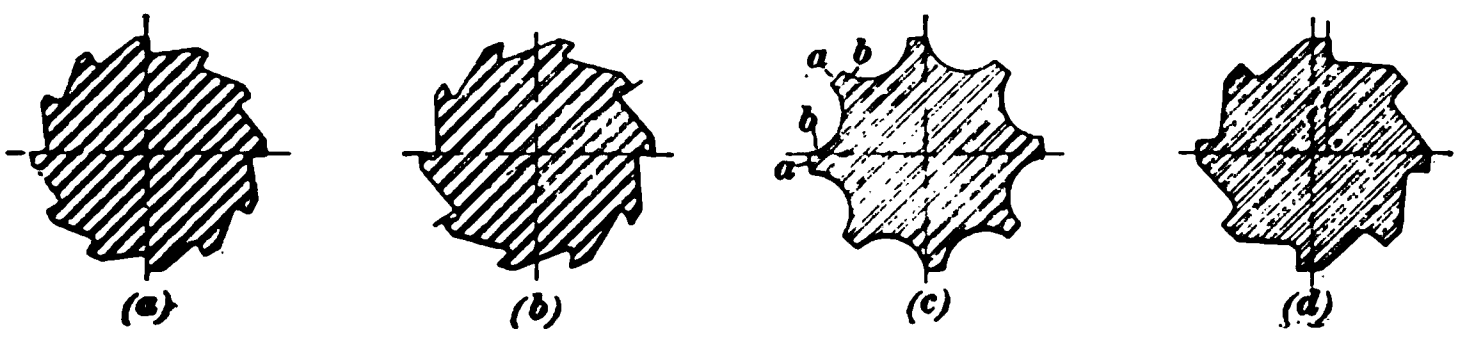

FIG. 33.

47. Curved Cutting Faces.—Reamers with **curved cutting faces** *a*, *b*, illustrated in Fig. 33 (*c*), are objectionable, as they have a negative front rake that is increased by grinding.

48. Brass Reamer.—Fig. 33 (*d*) illustrates a reamer that is used for brass when a sufficiently large amount of work is to be done to warrant the expense of a special reamer. The faces, in sizes of about $\frac{5}{8}$ inch to 1 inch in diameter, are set forwards from the radial line about $\frac{1}{16}$ inch, and are made parallel to it, thus giving a negative front rake. For larger sizes, the faces are set forwards a corresponding amount.

49. Number of Cutting Edges.—A reamer should always have enough cutting edges to guide itself in a straight line through the hole. There should never be less than four, and where the diameter is large enough to make it practicable there should be more. The number of edges

should be even and not odd, as this makes it possible to caliper the reamer.

50. Rounded or Tapered Ends.—The ends of the cutting edges should be rounded slightly, as shown at *a*, Fig 34 This creates a tendency for the reamer to keep working toward the center of the hole This same advantage is secured by making the lower end with a slight taper, $\frac{1}{8}$ inch or more long, as shown at *a b*, Fig. 35.

FIG. 34.

51. Depth of Cut.—In all classes of reaming, the holes should be drilled as nearly to the finished size as possible, so that the reamer need take only a light finishing cut. This preserves the edges, avoids frequent grinding, and lengthens the life of the reamer. An allowance of $\frac{1}{64}$ inch of stock is sufficient for the reamer in holes having a diameter of 1 inch or less, while in holes having diameters between 1 and 2 inches, $\frac{1}{32}$ inch is enough. For sizes above 2 inches in diameter it is usually considered best to finish the hole with a boring bar and cutter, except in cases where the hole passes through

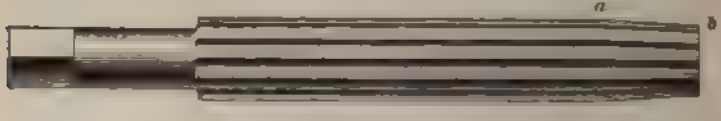

FIG 35.

two adjoining parts. In such cases, a long reamer may be used for finishing. Holes above 2 inches are sometimes finished with large shell reamers.

TAPER REAMERS.

52. Solid Taper Reamers. Tapered holes for dowel pins and various other purposes have brought **taper reamers** into very general use They are fluted and made

like a straight reamer, except that the sides are tapered. Fig. 36 (*a*) illustrates a reamer of this type.

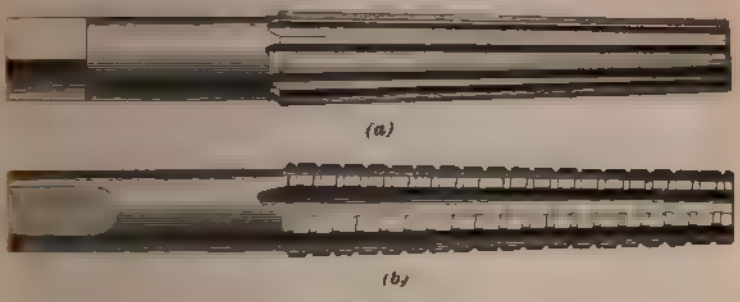

(*a*)

(*b*)

FIG. 36.

53. Heavy Duty of Taper Reamer.—The duty of a taper reamer is heavier than that of a straight reamer, since it must remove a larger body of metal. The drilled hole is straight and must be a little smaller than the small end of the reamed hole. The amount of metal that must be removed is represented by the part *a c b* in Fig 37, and depends on the taper required.

54. Roughing Reamer.—Where the taper is great, a **roughing reamer,** Fig. 36 (*b*), is first used to remove the excess of metal. This is followed by a finishing reamer,

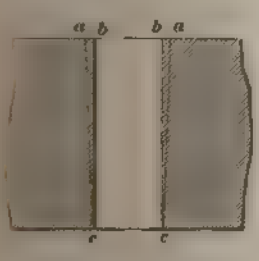

FIG. 37.

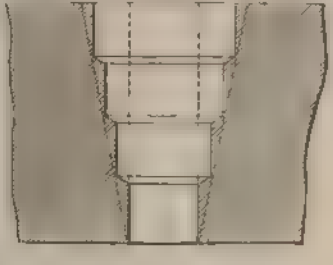

FIG. 38.

Fig. 36 (*a*), which should take only a very light finishing cut. In some shops, it is customary to relieve the reamer in heavy work by counterboring steps, as shown in Fig 38. This is a rather dangerous proceeding, as the cutting edges

of the reamer are liable to be injured in removing the heavy metal on the corners of the steps, and the varying depth of cut causes uneven wear of the cutting edges, resulting in unsatisfactory working conditions and imperfect holes. There is also danger of the counterbore being made too deep and extending beyond the limits of the metal to be removed. It is better to have a third reamer, with coarse teeth and deep grooves running in a left-hand spiral across the cutting edges, as represented in Fig. 39. This should be followed by the roughing reamer mentioned above, to take out the coarse tool marks and to enlarge the hole so that only enough stock is left to allow a light finishing cut to be taken with a smooth finishing reamer. In holes of very slight taper, the roughing reamer is usually not used, but even here, when a large number of holes are to be reamed, it is advisable to use it, as it preserves the cutting edges and the accuracy of the finishing reamer.

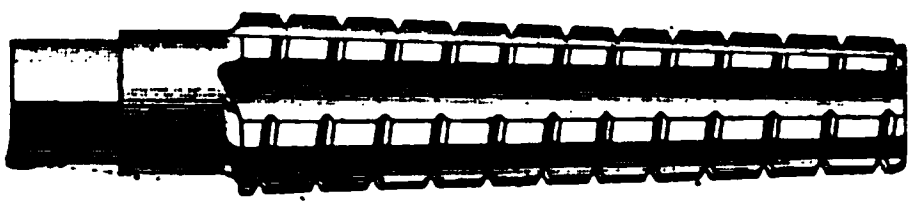

FIG. 39.

55. Care of Reamers.—The most serious difficulty met with in reaming is the maintenance of the full diameter of the cutting edges, and in order to keep them in good condition as long as possible, the greatest care should be taken in their use. This is especially necessary with finishing reamers, which may be rendered useless by a very little wear or a slight injury. Reamers should never be pounded or jerked sidewise when in a hole, and when not in use, they should always be kept on wooden shelves, or on a wooden board, or other support, if at the machine.

56. Inserted Blades. — A form of reamer that is gradually growing in favor is illustrated in Fig. 40. The cutters, which are made of steel, are dovetailed into a solid body. In reamers of 5 or 6 inches diameter, the body is sometimes made of cast iron. The special advantage of this form lies in the ease with which an injured blade may

be renewed. In the solid reamer, a cracked or broken cutting edge, or any slight warping, throws the whole reamer out of use. In this form, the injured part is simply driven out of the dovetail, a new one is inserted, and the reamer is

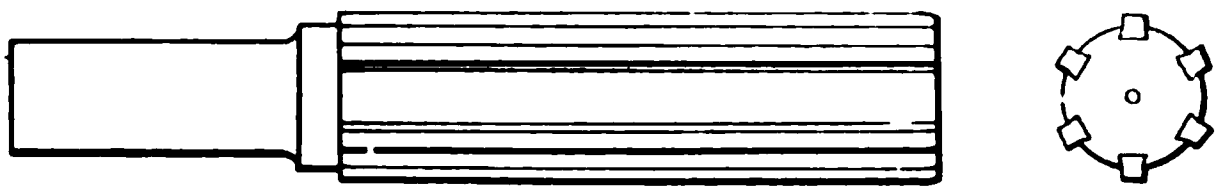

FIG. 40.

as good as when it was new. This is especially advantageous in the larger sizes, which are very expensive.

Inserted blades are, however, not practicable in the smaller sizes, as there is not stock enough to support the blades properly. Opinion as to the minimum size in which they can safely be used varies; ordinarily, they are not used in reamers less than $1\frac{1}{4}$ inches in diameter.

ADJUSTABLE REAMERS.

57. Advantages of Adjustable Reamers.—When solid reamers are used, it is customary to make the diameter as much larger than the desired diameter as the limit of error in the working fit will permit, and to use it until the diameter has been reduced to the inside limit of error, after which it must be worked over or discarded. For the best grades of machine work, where the permissible variation is reduced to a minimum, the life of such a reamer is very short.

58. A Simple Adjustable Reamer.—For this reason, reamers with adjustable cutting edges have been found

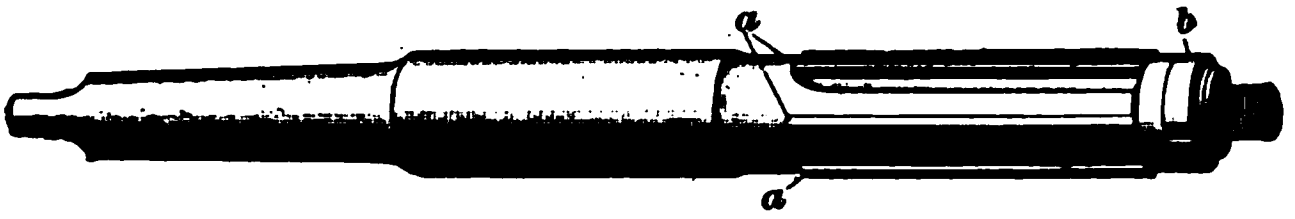

FIG. 41.

much more satisfactory than the solid type. Fig. 41 shows one type of **adjustable reamer.** The reamer is adjusted

to the desired size by means of a ground tapered plug that acts upon the blades *a*, and is locked by the locknut *b* when the adjustment has been made. With this type, a limited amount of wear or the reduction of diameter due to grinding can readily be taken up.

59. Adjustable Reamer for Different Sized Holes.—An adjustable reamer so constructed that all the cutting edges are adjusted uniformly throughout their entire length, and in which the adjustment is easily made, may take the place of a number of solid reamers that would otherwise be necessary for different fits of the same nominal diameter. Fig. 42 (*a*) and (*b*) shows a reamer especially

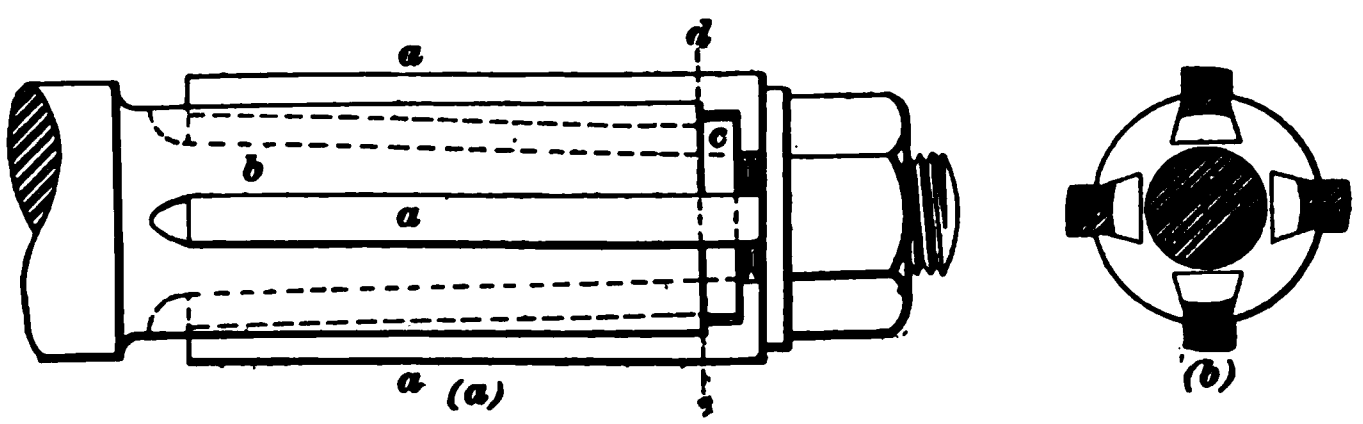

FIG. 42.

made for this purpose. The blades *a* are held in the body *b* by dovetails, which taper toward one end, and as the blades are carried along longitudinally, they are moved out and the diameter is enlarged. A collar *c* determines the position at which the blades stand and fixes the diameter. By having different sets of blades, and collars of different lengths, such a reamer may be used for a number of sizes and will do fairly accurate work. Fig. 42 (*b*) shows a section through *d e* of Fig. 42 (*a*). For extreme accuracy the solid reamer is best. Sometimes adjustable reamers are so arranged that forcing the blades toward the point expands them, the nut being placed back of the blades.

60. Expansion Reamer.—Another adjustable form of reamer, known as the **expansion reamer,** is shown in Fig. 43. The reamer is drilled for a taper plug in the lower end, and the sides are slotted, as shown. The plug

is threaded, and, when screwed into the end of the reamer, expands it. Reamers of this kind are made as small as ¼ inch in diameter, while the reamer illustrated in Fig 41 is not made smaller than ¾ inch. The adjustment also is very easily made, and, by taking a number of cuts, a large amount of metal may be removed. The hole is not, however, very accurate. The expanding plug enlarges the

FIG 43.

middle of the reamer most, and the cutting edges taper toward the ends, resulting in curved cutting edges without a straight portion to guide them. Any unevenness in the structure of the metal causes the reamer to run out of its true course. Where accuracy is essential, this kind of reamer should never be used for the finishing cut, but should be followed by a finishing reamer.

SHELL AND ROSE REAMERS.

61. Fig. 44 (*a*) shows an ordinary **shell reamer,** and Fig. 44 (*b*) a **rose shell reamer.** Both of these have already been described in Art. **31,** *Lathe Work*, Part 2.

FIG. 44.

They are sometimes fitted to shanks, which in turn fit drill sockets, and are used in drilling machines. The rose reamer is especially well adapted to removing a large amount of

metal in this way, but usually does not leave the hole smooth, and should therefore be followed by a finishing reamer.

The rose reamer shown in Fig. 44 (*b*) has a flute for every second cutting edge. Many persons prefer to have a flute for each cutting edge, claiming that it adds to the efficiency of the reamer. Rose reamers are therefore often made this way. If the rose reamer is used for horizontal work, as in a horizontal drill or lathe, the chips will clog in the short flutes; hence, each cutting edge should have a flute.

COUNTERSINK.

62. Definition.—It is frequently necessary to enlarge the end of a drilled hole to take the taper head of a bolt or other machine part, as shown in Fig. 3 (*a*). This operation is known as **countersinking.**

63. Drill as a Countersink. — The tools used in countersinking resemble very closely the various forms of drills. In some shops and for some classes of work, the point of a drill is simply ground to the desired taper. When the cutting edges are properly formed, the metal uniform, and the surface smooth, very good results are obtained in this way, but for general use it is better to have a countersink that is guided by a center pin.

64. Pin Countersink.—A flat countersink provided with a pin *a*, which fits the hole and holds the tool perfectly central under all conditions, is illustrated in Fig. 45. This same style of tool is sometimes made with four cutting edges, as illustrated in Fig. 46.

65. Pin and Collar Countersinking. — Where a countersink of the same taper is occasionally required in holes of different diameters, a tool as shown in Fig. 47 is found very serviceable. The pin *a*, instead of fitting the

hole, becomes the bearing of a set of collars *c*, which are turned on the outside to fit the different holes in which the tool is to be used. The collars in this form of tool

FIG. 45.

FIG. 46.

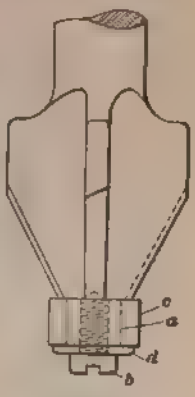

FIG. 47.

are secured by a screw *b* and washer *d*. The cutting edges may be made of any type desired, but four edges, as shown

FIG. 48.

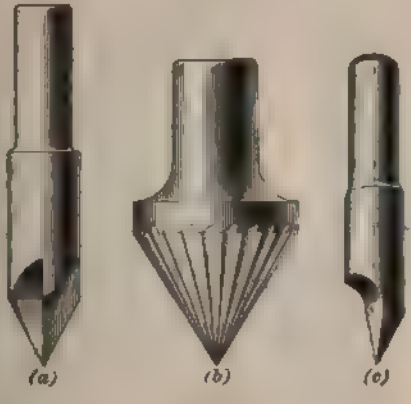

FIG. 49.

in the illustration, are perhaps the most desirable, there being enough cutting edges to guide properly, while the

construction is very simple. Turning the cutting edges back, as shown, forms a bearing for the top of the collar and facilitates the grinding. In some cases, collars are simply slipped over the pin of an ordinary countersink.

66. Combined Reamer and Countersink. — In plate work, reaming and countersinking may be done at the same time with the combination tool shown in Fig. 48. The lower end *a* is made like an ordinary fluted reamer, while the countersink *b* is formed with four cutting edges ground to the desired angle.

67. Center Countersinks.—Milled and half-round countersinks, as shown in Fig. 49 (*a*), (*b*), and (*c*), are used almost entirely in enlarging centers in lathe work, but these styles may be used for ordinary countersinking as well.

COUNTERBORE.

68. Ordinary Types.—Counterboring consists of enlarging a hole at one end so that the enlarged part has parallel sides and a flat bottom, as illustrated in Fig. 3 (*b*). For small counterbores, any of the pin countersinks already described, with the cutting faces ground at right angles to the center line, as in Fig. 50, are frequently used.

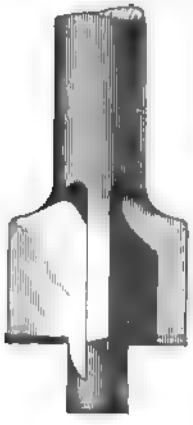

FIG. 50.

69. Double-End Cutter. — A better counterbore, Fig. 51, is made from a round bar of steel with a rectangular hole cut through it, into which a flat cutter *a* is inserted and held by means of a key *b*. The lower end of the bar is made to fit the hole without any play, while the length of the cutter represents the diameter of the counterbore. This cutter cuts on both sides of the bar,

and great care must be taken to have it project the same distance on each side, and to have the cutting edges ground so that both sides will take an equal cut.

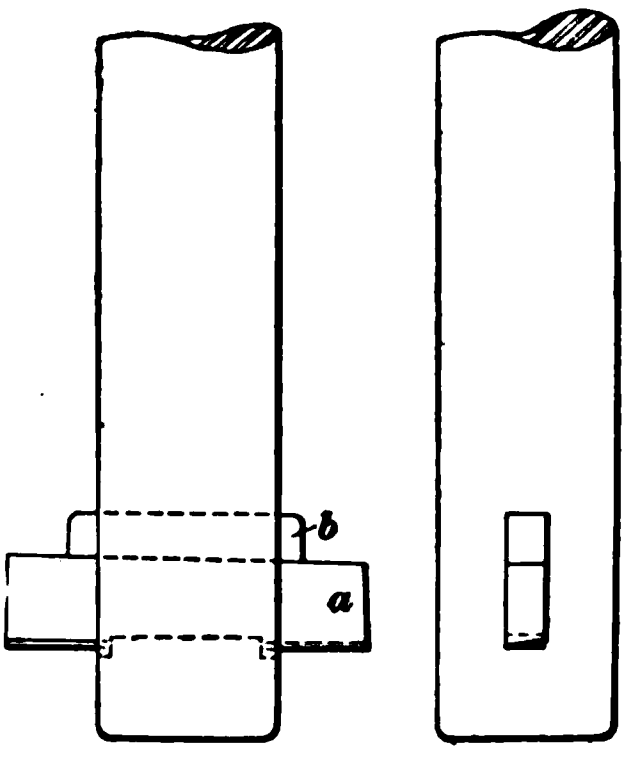

FIG. 51.

70. Single-End Cutter.—This style of counterbore is sometimes made with the cutter projecting on one side only. The latter tool is used very generally in boring holes in horizontal drilling and boring machines, and is usually called a *boring bar and cutter*.

71. Milled End of Bar.—Sometimes the lower end of the boring bar and of the pin on the pin counterbore is made with the corners slightly rounded and serrated. This is especially useful when the hole is drilled slightly under size or is not perfectly round, as it enables the boring bar to cut away enough metal to permit it to turn freely.

72. Counterbore for Light Work.—A very useful tool for counterboring is illustrated in Fig. 52 (*a*). A circular hole *a* is drilled in the bar *b*, in which a circular piece of tool steel *c* is inserted and held in place by a pin *d*. The bar is then put in a lathe and the ends of the tool *c* turned up to the desired diameter. The ends are backed off and the cutting edges ground as shown. The lower end of the bar is turned to the diameter of the hole below the counterbore, to form a guide for the tool.

This tool gives very good results when operated with care and on light cuts, but the cutter is not heavy enough to stand a very heavy strain. The breaking of the cutter is, however, not a serious matter, as it can be replaced with very little loss of time and at small expense.

73. Counterbore With Changeable Tool.—This same style of cutter may be used with the device shown

in Fig. 52 (*b*) without danger of breaking under ordinary usage. The bar *b* has a hole *a* drilled into it as in Fig. 52 (*a*), and immediately above this a slot *c* is formed. The tool *d* is made with an angle on top, as shown, and a support *e* for the cutter is shaped to fit this angle and the slot *c* when the

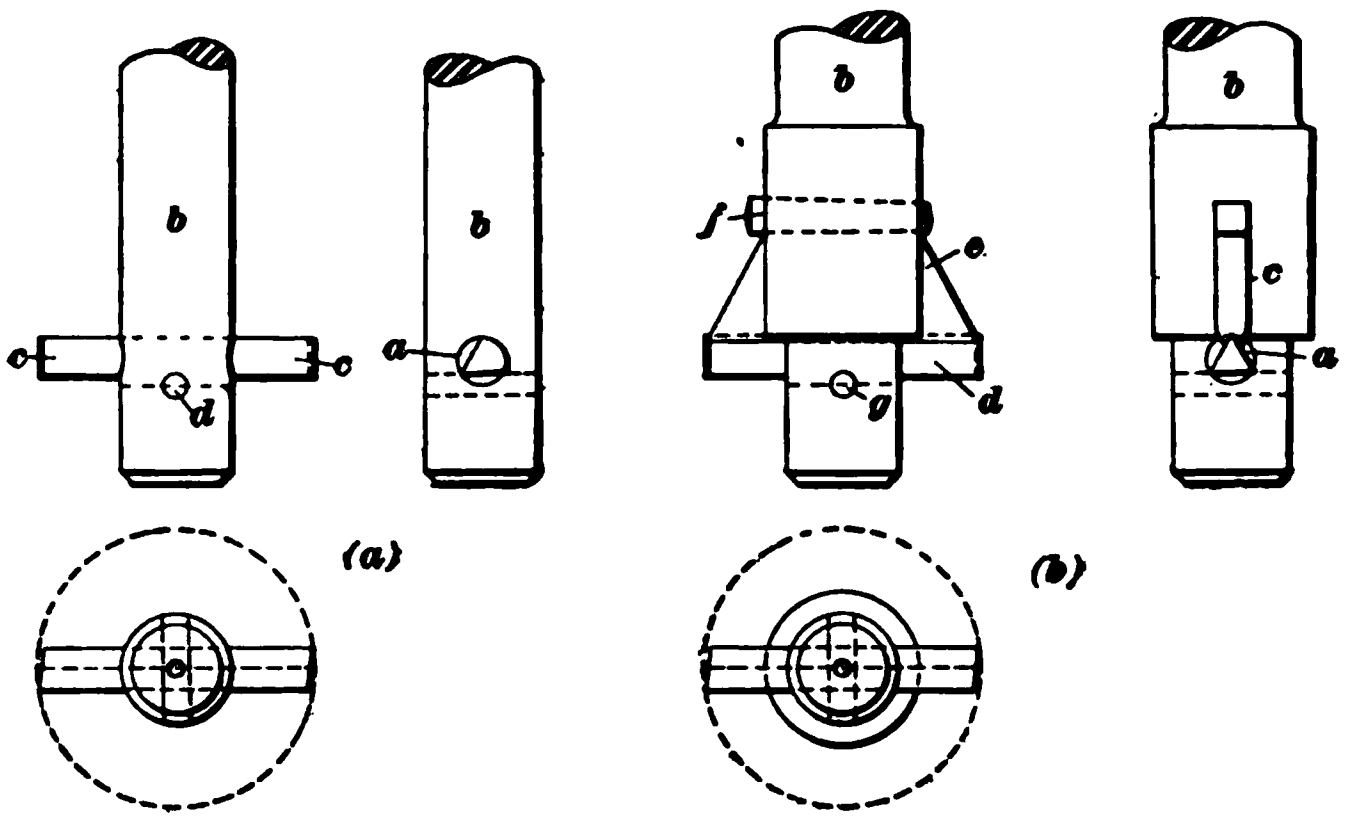

FIG. 52.

tool stands in its proper position. A wedge *f* holds the tool and its supporting piece rigidly in place, while the pin *g* prevents any end motion of the cutter. The piece *e* should run the entire length of the cutter, in order to furnish as much support for the ends of the tool as possible.

A set of cutters and supports of different lengths may be made for use in the same bar, thus providing counterbores of a number of sizes at a very small cost. A set of collars for the bar end that will fit various holes will render this tool available for a large range of work.

74. Special Counterbore. — Another tool that is sometimes used in counterboring, and is available for a broad range of work, is shown in Fig. 53. The body *a* has grooves *b* running lengthwise, into which blades *c*, with side projections *d*, are fitted. The blades are held in place longitudinally by the hooked ends *e*, which fit a corresponding groove in the nut *f*. An opening *g* at the end of the nut permits the blades to enter when the nut is turned to the right

position. When the blades are all in place, they are moved to the right location on the body by screwing up the nut *f*, and are locked in place by the locknut *h*.

It will be seen that by making sets of blades of different sizes and providing center pins *i* of corresponding sizes, a set of counterbores covering a wide range of work may be provided. While this tool is more expensive than the one

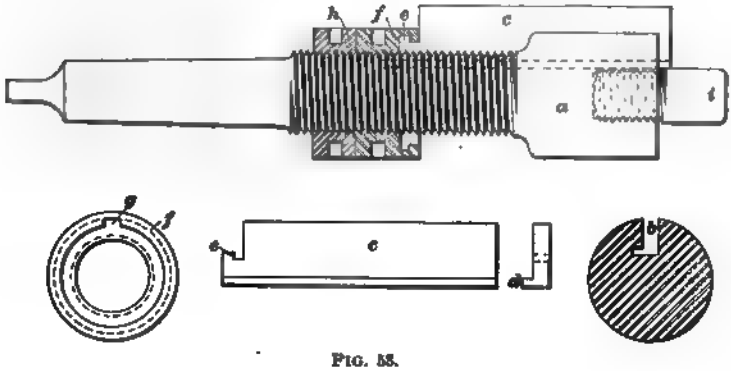

FIG. 53.

shown in Fig. 52 (*b*), it has the advantage of being available for smaller holes, since the size of the center pin may be made much smaller. This tool will therefore cover a broader range of work, and, when once constructed, can be used until the greater part of the blades is worn away, thus avoiding the expense of frequent renewals.

SPOT FACING.

75. Definition. — A very common drilling-machine operation is the facing of spots about drilled holes, to form smooth surfaces for the heads or nuts of bolts or other machine parts. When the faced area is quite small and the facing is done with a rotating cutter, the operation is called **spot facing.**

76. Forms of Cutters.—The cutters are the same as those used for counterboring, and the only difference in the

operation lies in the depth of the cut. A counterbore may be of any depth, but the spot facing is only carried deep enough to form a smooth bearing surface. The bar with inserted cutter is especially well adapted to spot facing flanges of cylinders, cast-iron pipe flanges, etc.

77. Spot Facing Lower Side of Flange.—Fig. 54 shows a piece of pipe on which the flanges must be spot faced on the lower side. The flanges are drilled in the ordinary way, after which the drill is removed from the socket and the cutter bar put in its place. The cutter is then removed from the bar, the bar passed through the hole, and the cutter again put back into its place in the bar with its cutting edges toward the flange. The facing is done by feeding the drill spindle backwards.

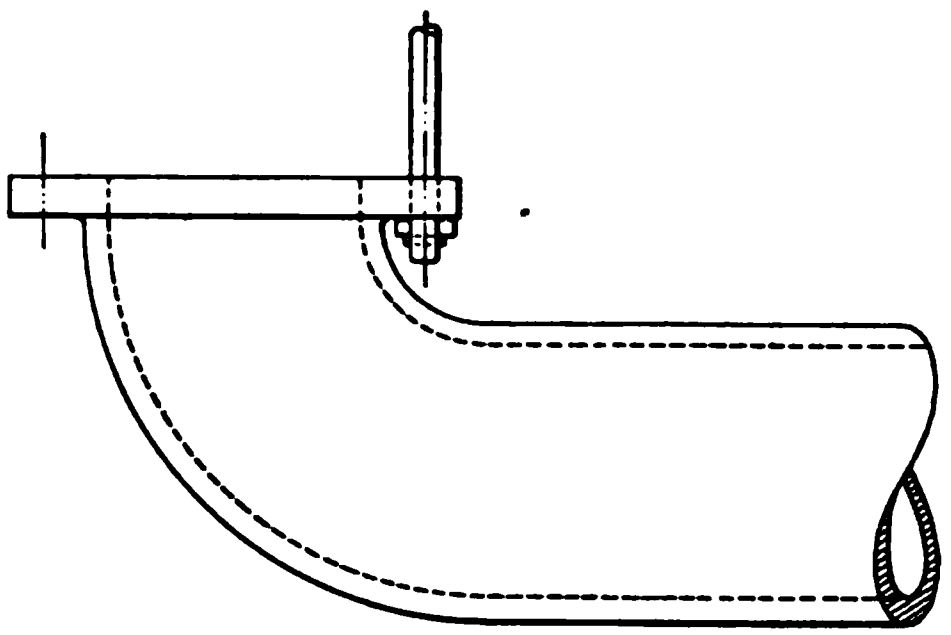

FIG. 54.

CENTER DRILLS.

78. Although **center drilling** is essentially a drilling-machine operation, it is so closely associated with lathe work that it has been discussed under that head, and descriptions of tools and their various uses are found in Art. **23,** *Lathe Work*, Part 1.

TAPS.

79. The forms of **taps** used in drilling machines resemble those employed with the lathe. In holes that do not run through the material, a **taper** and **plug tap,** Fig. 55, are required, the former to start the thread and the latter

to complete it to near the bottom. When a full thread must be run all the way to the bottom of the hole, the plug tap is followed by a **bottoming tap,** shown in Fig. 55. In the case of holes that pass through the material, the taper

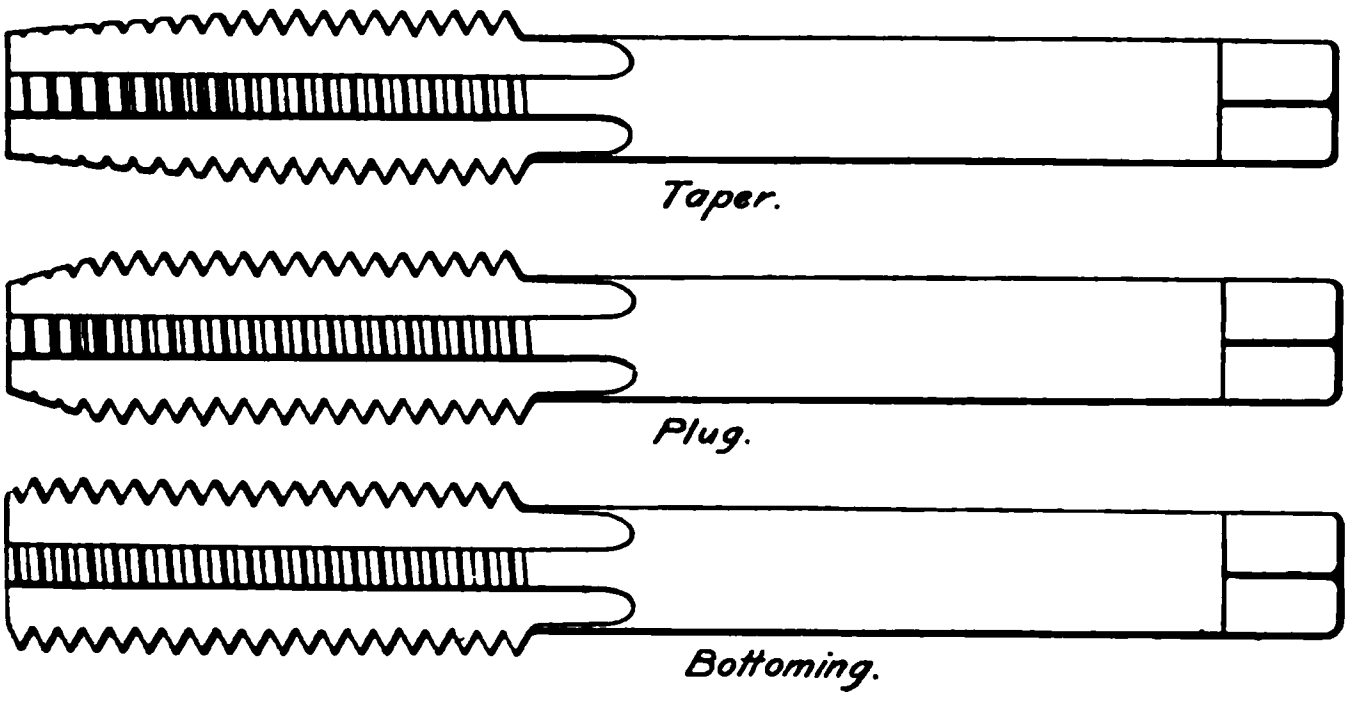

FIG. 55.

tap alone may be used. In high-speed machines, such as pneumatic drills, a long taper tap gives the best results, on account of the fact that less material is removed by each tooth, the work being distributed along the length of the tap.

The shanks of taps that are to be employed in the drilling machine exclusively may be made to fit the spindle or a collet of the machine for which they are intended. When they are required for general use, special sockets are needed to receive the square shank of the tap.

DEVICES FOR HOLDING TOOLS.

80. Straight Socket With Setscrew. — Various devices for holding tools in drilling-machine spindles have been brought into use. One of the earliest of these—still found in some shops—consists of a hole drilled in the bottom of the spindle, with a setscrew holding the drill, as shown in Fig. 56. This device has several disadvantages. The drill may press on one side of the screw and in a

direction that tends to loosen it. To prevent this, the screw is jammed upon the drill, causing a burred shank that it is difficult to remove. When the shank does not fit the socket exactly, the pressure of the screw on one side throws the drill off the center of the spindle and results in the cramping of the drill and a poorly formed hole, and often in an injured or broken drill.

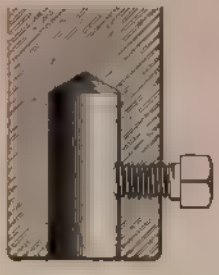

FIG. 56.

81. Taper Shank.—A very simple and efficient means of holding the drill, known as the **taper shank**, is shown in Fig. 57. The drill spindle *a* is made with a tapered hole *b* at the lower end. At the upper end, the hole is made

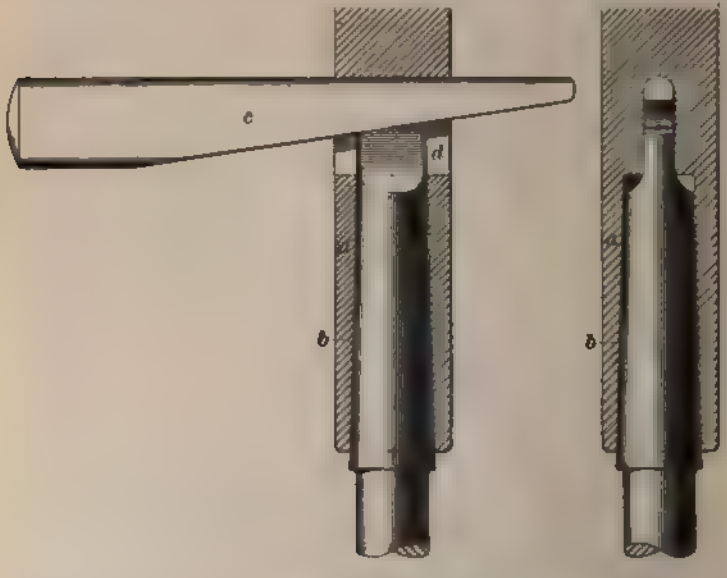

FIG. 57

flat on two sides to receive a tang or flattened projection on the upper end of the drill shank

The taper that is in most common use for drill shanks is

known as the **Morse taper** and is about $\frac{5}{8}$ inch per foot. This taper is just great enough to hold the drill when put into place with a quick motion of the hand or under slight pressure. The drill shank must, of course, be made with precisely the same taper as that in the spindle, so that the entire surface will be in contact. The tang at the top of the drill shank must also fit snugly, as it takes practically all the torsional strain that comes upon the drill when cutting, the tapered surface taking only a very small part. The drill is removed by driving a taper key *c* into the slot *d* in the spindle. The slot *d* is so located that the point of the key just passes over the end of the tang, but when the body of the key is driven in, it forces the drill out.

82. Drill Sockets or Collets.—All sizes of drills cannot be made with the same size of shank; consequently, it is necessary to have a number of **drill sockets** or **collets,** Fig. 58 (*a*) and (*b*), to take the sizes of drills that do not fit the spindle. The upper end of the socket is made to fit the spindle, or the next larger size of socket, while the lower end is made to fit the desired drill.

Collets are also found very serviceable where it is desirable to use a drill with one kind of shank in a spindle intended for another. Fig. 58 (*c*) illustrates a collet for a taper-shank drill and a straight spindle.

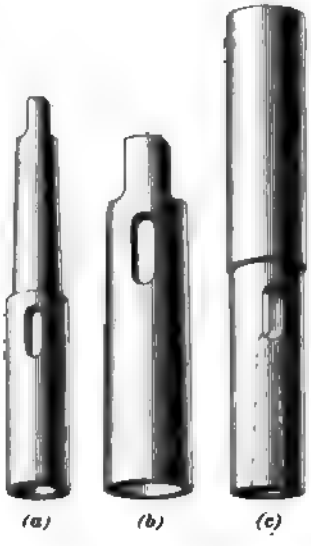

FIG. 58.

83. Pin-Grip Socket.—A form of drill socket that permits the drill to be changed while the spindle is running is shown in Fig. 59. The shank of the socket *a* is made to

fit the taper of the spindle *b*. A collet *c* is made to fit over the shank of the drill *d*. The body of the socket *e* is bored out straight to receive the collet, which is held in place by two pins that enter the groove *f* and are controlled by the collar *g*. To remove the collet, the collar *g* is raised with one hand, while the drill is in motion, and the collet is removed with the other hand.

FIG. 59.

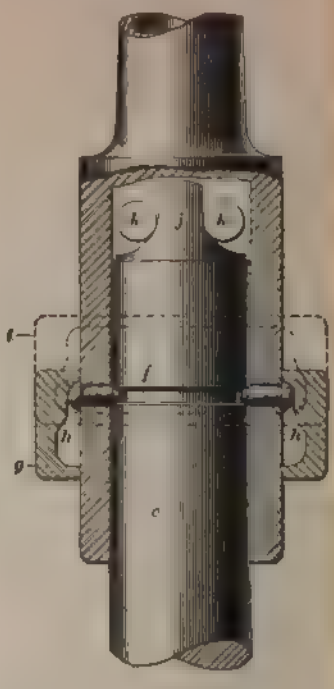

FIG. 60.

Fig. 60 shows a partial section of the socket. The collar *g* is bored out to form an internal cam. When the collar is in its lowest position, it holds the pins *h*, *h* in, as shown, their points entering the groove *f* in the collet. When *g* is raised to the position *i* indicated by the dotted lines, the centrifugal force tends to throw the pins out, thus relieving the collet. The ends of the pins are tapered, so that the weight of the collet or drill will assist in moving them out when the

machine is running at a slow speed and the centrifugal force alone is not sufficient. The collar is brought back by its own weight when relieved by the hand. The collet *c* is made with a tang *j*, which stands between the two pins *k*, *k*, thus causing it to rotate with the spindle.

84. Key-Grip Socket.—In very heavy work, the tang sometimes yields to the torsional strain and is twisted. Fig. 61 illustrates a device that grips the body of the shank as well as the end. The illustration shows the grip socket

FIG. 61

with a part cut away, thus exposing all the working parts. The shank and tang are of the ordinary taper type. A keyway *a* is cut into the shank of the drill with a circular cutter, thus making the bottom the arc of a circle. The key *b*, which fits the bottom of the keyway and also a slot in the socket, is held in place by a collar *c*, which is bored eccentrically, and which, when in the position shown, causes the key to grip the shank with a tendency to keep it from working out, as well as preventing it from turning in the socket. To remove the drill, the collar is turned to a position where the key is free to move out of the drill shank, and the drill is driven out in the usual way. This device can be used with any of the standard taper-shank drills by simply milling in the keyway.

FIG. 62.

85. Light Drill Chuck. Separate chucks that grip the drill on two or more sides are found very

satisfactory for the lighter grades of work, and a large number of different kinds have been made. Fig. 62 represents a type that is largely used for small drills. The body of the chuck *a* is attached to the drill spindle either by means of a screw or a taper shank, as described above. In three holes *b* converging toward the center line, as shown, are three jaws *d*, which, when forced forwards by the nut *c*, close in upon the drill shank and grip it firmly. The jaws are so formed that the parts that grip the drill are always parallel and therefore grip various sizes equally well. The nut is held in and turned with the collar *e*, which is nurled on the outside to furnish a better grip for the hand.

86. Heavy Drill Chuck.—Another form of chuck that has given excellent satisfaction and is used for heavier work than the one just described, is shown in Fig. 63. The body of the chuck has a slot *a* cut across the lower end, in which two jaws *b*, *b* are free to move toward and away from the center. These jaws are controlled by means of a screw *c*, one end of which has a right-hand thread and engages with the thread on one jaw, while the other end has a left-hand thread that engages with the other jaw. The jaws are so guided that the faces are always parallel, and drills of any diameter that will enter the chuck are gripped equally well. A hole in the plate *e*, which is screwed to the bottom of the body, is large enough to take only the largest diameter of drill for which the chuck is designed. A plate *f* immediately above the jaws contains a slot *g* made to fit the tang on the upper end of the drill shank, thus preventing the drill from slipping in the chuck.

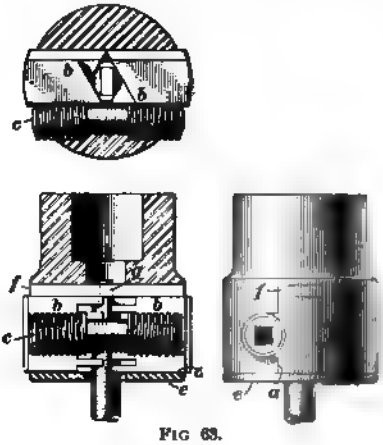

FIG 63.

87. Safety Drilling and Tapping Device.—A very efficient safety device for drilling and tapping is illustrated in Fig. 64. A shank *a*, which is tapered to fit the spindle with which it is to be used, has upon its lower end an enlarged part that is threaded on the outside and bored out to form a friction seat for a socket *b*. A cap *c*, which has an internal thread to fit the external thread on *a*, clamps *b* between itself and *a*, forming another friction surface between *b* and *c*. Two fiber washers *d* and *e* are placed between *a* and *b* and *b* and *c*, respectively. The cap *c* is tightened on the washers until the friction obtained is sufficient to drive the drill or tap, and is held in adjustment by the check-nut *h*.

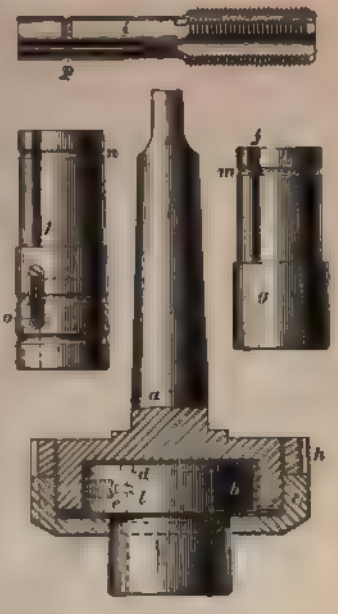

FIG. 64.

Two spanner wrenches are required to make the adjustment. Drill and tap sockets that fit the required drills or taps are made to fit the socket *b* and are kept from dropping out by the catch pin *l*, which enters the grooves *m* and *n* in the drill and tap sockets, and is held in place by a spring and retaining screw. The sockets are driven by means of two feathers. The tap shank is made about $\frac{1}{100}$ inch smaller in diameter than the tap socket *f*, thus allowing the tap to take its own feed without injury to the thread, and to center itself with the hole without binding, while a catch pin *o*, held in place by a flat spring, engages with a groove in the tap and keeps it from dropping out until a force greater than its own weight is applied. A specimen of the taps used, marked *t*, shows how the shank is constructed, *p* being the groove for the catch pin. The drill

sockets *g*, which are made in various sizes to take different sized drills, have a standard taper and a slot *j* at the upper end to receive the tang.

88. Automatic Reverse Tapping Chucks.—Where a large amount of tapping is done, much time may be saved by the use of a device that will reverse the tap and back it out, either when the tap bottoms or sticks, or when it has run the required depth. Several such devices are on the market and many of them give very good results. In one class, the mechanism is so designed that the tap travels with the spindle while running forwards, but as soon as it meets with more than a certain amount of resistance, a reversing gear, or set of gears, is thrown into action and the tap is backed out at an increased speed. In another class, the tap is also reversed and backed out when it has run a stated depth. Such a device, it will be seen, is a safety provision as well as a means of saving a large amount of time.

SECURING WORK ON THE TABLE OF THE SIMPLE DRILLING MACHINE.

89. Securing the work properly on the table of a drilling machine is one of the important parts of drilling. A piece that is not properly set or not well secured will not be well drilled, although all other conditions may be perfect.

90. The Table. — The **table** of the ordinary drill press should furnish a perfectly plane surface standing at right angles to the center line of the spindle. It should also be provided either with holes through which bolts may be passed or radial slots for T-headed bolts, so that work may be clamped rigidly upon it.

91. Securing the Work.—A plain piece of work, in which the holes are to be drilled at right angles to a plane upon which the piece may rest, may be secured very simply in the following manner: The piece *a*, Fig. 65, which is to be drilled, is laid upon the table *b*, with two parallel pieces of iron *c*, *c* under it to raise it far enough from the table to

prevent injuring the latter when the drill emerges from the piece. Two clamps *d*, *d* are then placed with one end upon the piece over the parallels, and the other end upon blocks or screw jacks *e*, *e* of the same height as the top of the piece. Bolts *f*, *f* are then put through the clamps and the table, as near to the work as the holes will permit, and the nuts screwed down until the clamps press firmly upon the piece and hold it rigidly enough to prevent any slipping while the drill is passing through it.

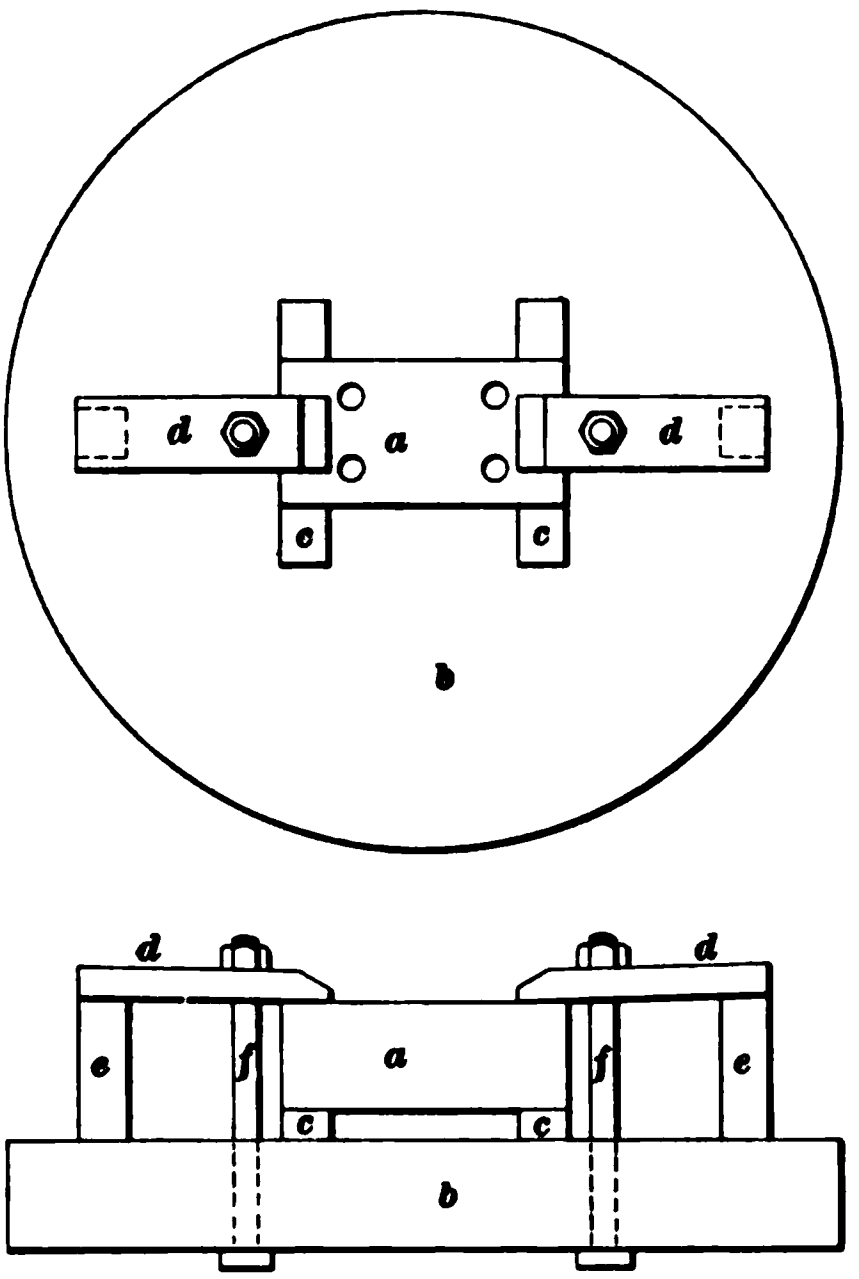

FIG. 65.

The above illustration embodies the essential features of clamping. A piece must always be set so that the center line of the hole to be drilled is parallel to the center line of the spindle, and must be clamped rigidly in that position. Great care must be taken to have all the supports so adjusted that the piece will not spring out of shape when the clamps are tightened down.

Irregular parts that have not a plane surface upon which to rest must be supported with jacks or blocks at different points. When pieces that are too large to be supported entirely upon the table are to be drilled, the overhanging parts must be blocked up, to prevent any undue strain upon the table or any spring in the piece itself.

92. Plain Clamp.—The **clamps** are often made by drilling a hole a little larger than the bolt in a piece of flat

iron of suitable length. This kind of clamp is sometimes made with an offset, as shown in Fig. 66 (*a*), which serves the double purpose of forming a shoulder to prevent the work from rotating and of lowering the clamp-bolt nut so that it does not interfere with other parts.

93. U Clamp.—A more convenient clamp is made of a piece of square iron bent in the form of a **U**, as shown in Fig. 66 (*b*), the inside width being just great enough to take the bolt freely. Such a clamp can be removed and replaced without taking the nut off the bolt. In some cases, the other form is of advantage, however, and both are found among the accessories of a drilling machine. The **U clamp** is often made without the offset at the end, shown in the illustration.

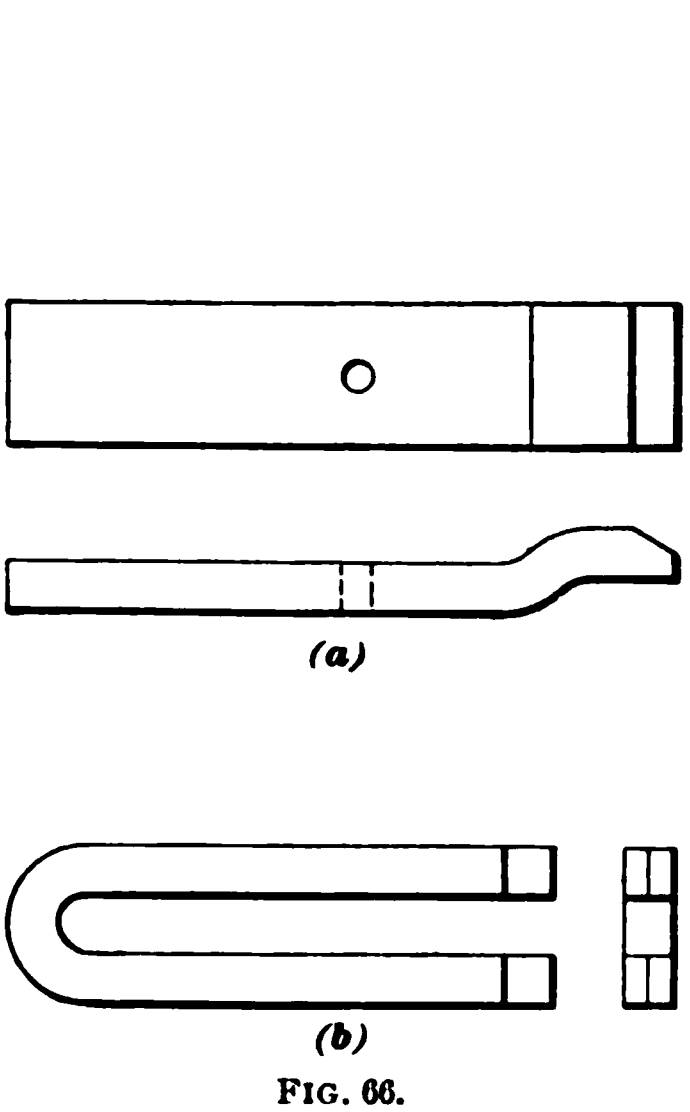

FIG. 66.

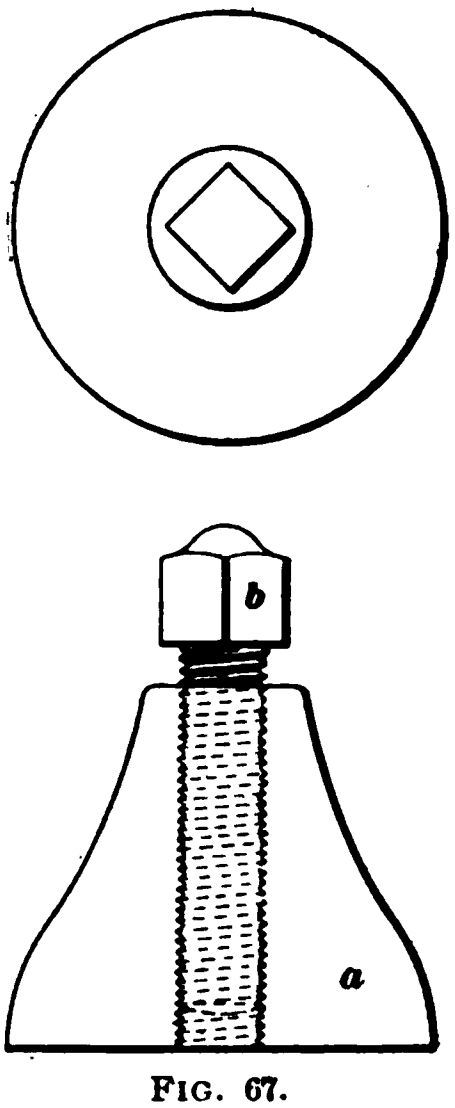

FIG. 67.

94. Screw Jack.—The **screw jacks** mentioned above consist of a cast-iron foot *a*, Fig. 67, which has a tapped hole running vertically through it and a square-head bolt *b*, with a thread cut the entire length of the body, screwed into it. The top of the bolthead should be faced to form a good bearing surface, and the corners rounded to

prevent any digging when adjusting the height. The bottom of the foot is sometimes left rough, but it is better to have it finished.

95. Parallels.—The **parallels** used in blocking up the work should be carefully planed and should be made of rectangular cross-section and in pairs. Sometimes parallels are made with the width exactly twice the thickness. It is convenient to have the width of each pair equal to the thickness of the next larger.

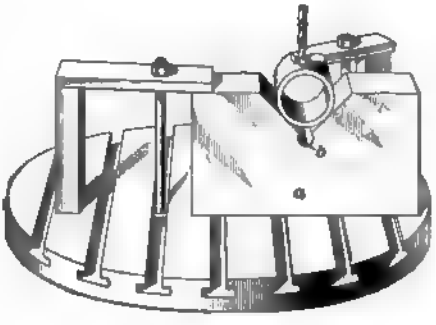

FIG. 68.

96. V Blocks for Supporting Cylindrical Pieces. Cylindrical parts are usually supported on **V blocks** *a*, Fig. 68. The V blocks should be made in pairs, so that a piece resting upon them may be exactly parallel to the drill table. It is usually of advantage to make the block wide enough to support short pieces with a single clamp, as shown in Fig. 68. A hole *b* drilled at the point of the V will form a clearance in planing. The two sides of the V usually make an angle of 45° with each other.

97. Angle Plates.—Pieces with a plane surface at right angles to the surface to be drilled are usually attached

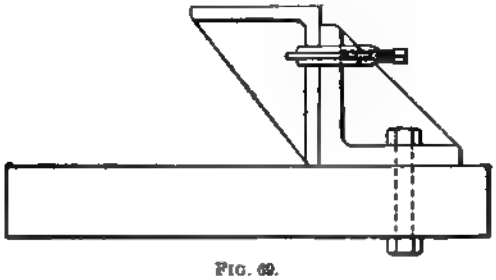

FIG. 69.

to an **angle plate** by means of clamps, as illustrated in

Fig. 69. If the overhanging part is too long, it should be blocked or jacked up and clamped at another point as far away from the angle plate as possible. The angle must, of course, be firmly bolted to the table.

98. C Clamps.—The style of clamp shown in Fig. 69 is known as a **C** clamp and is shown on a larger scale in Fig. 70.

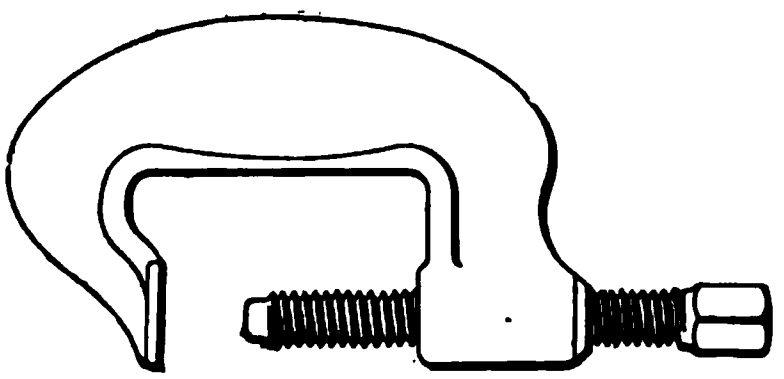

FIG. 70.

99. Special Angle Plates. — Angular pieces are frequently supported on angle plates of the same inclination as the piece. For instance, the piece *a* in Fig. 71 is clamped to an angle plate *b* of the same inclination, thus bringing the surface to be drilled parallel to the table.

100. Vise.—A **vise** as shown in Fig. 72 is often used for supporting the work. It is convenient especially where the bottom of a piece is irregular and yet has parallel sides that the vise may grip between the jaws *a*, *a*. A lug *b* on each side forms a convenient means of clamping the vise to the table.

101. Universal Vise.—Fig. 73 shows a **universal vise** that may be bolted to the table of a drilling machine

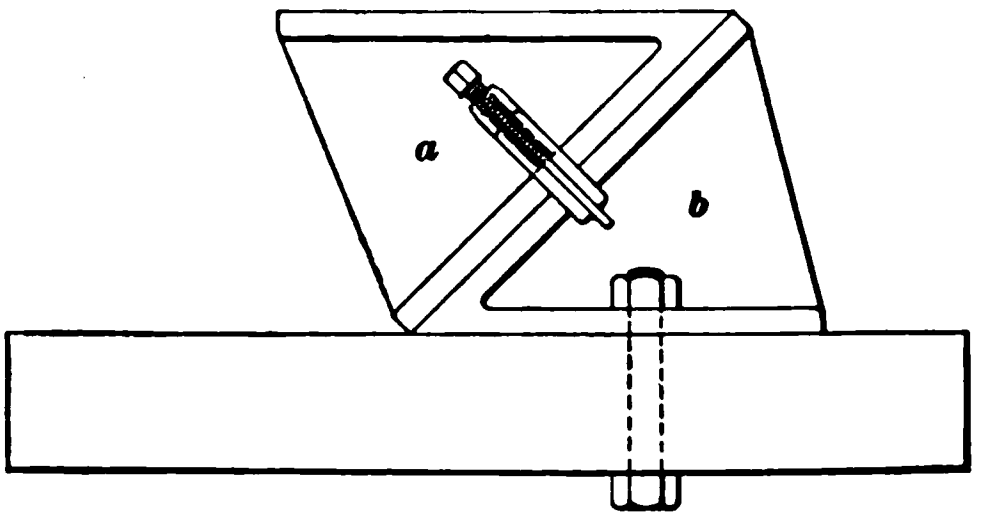

FIG. 71.

and may be rotated both in a horizontal and in a vertical plane. The two circles *a* and *b* are graduated, as shown. Such a vise is especially useful where holes must be drilled

at different angles in the same piece. The piece can be set either horizontally or vertically, and, by having the circles

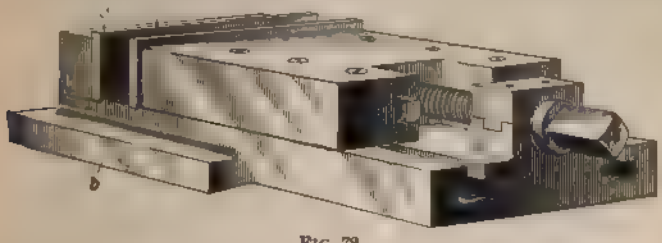

FIG. 72.

graduated, it can be rotated to any desired angle without resetting.

102. Necessity of Clamping Rigidly. — When a piece has been set and adjusted in a vise, the jaws and all parts that are liable to move should be tightened securely. In a good vise, provision is always made for clamping every joint. In the universal vise shown, for instance, it is not safe to depend on the adjusting screws to hold the work, and the clamping screws should always be drawn tight when all adjustments have been made.

FIG. 73.

103. Drilling Parts Together. — When two adjoining pieces are to be drilled so that the holes in the two are to match perfectly, they should be drilled together whenever practicable. This insures a perfectly continuous hole, and avoids a great deal of awkward and expensive fitting.

104. Jigs and Fixtures. — In manufacturing, where pieces are duplicated in large numbers, special **jigs** and **fixtures** are made for holding and drilling the work. Some of these will be considered later.

DRILLING AND BORING.

(PART 2.)

TYPES OF DRILLING MACHINES AND THEIR USES.

SIMPLE DRILLING MACHINES.

1. Up to the present time, only the simplest type of drilling machine has been considered—one that embodies only the principal features of the elementary drill.

2. Necessity of More Flexible Arrangement.—It is evident that in our modern practice there is need of a more flexible machine—one that will accommodate a broader range of work than the simple machine described.

3. Adjustable Table.—The great difference in the size of the work, and the various angles at which holes must be drilled, have demonstrated the need of an adjustable table that can be moved vertically, swung about the column, and rotated about its own center, while in some forms of drills it may be tilted to different angles.

4. Variable Cutting Speed.—It has already been seen that nearly all materials possess qualities that make it necessary to use different cutting speeds in order to work them efficiently. It is obvious also that a drill of large diameter must run more slowly than a smaller one, the revolutions per minute being inversely proportional to the

Copyright, 1901, by THE COLLIERY ENGINEER COMPANY.
Entered at Stationers' Hall, London.
All rights reserved.

diameter of the drill. To illustrate: A drill ½ inch in diameter may make twice as many revolutions per minute as a drill 1 inch in diameter, and four times as many as one 2 inches in diameter, in the same material. Provision must therefore be made for a number of different speeds, any one of which may readily be thrown in by the operator.

5. Variable Feed.—A more flexible means of feeding must also be provided. It is frequently necessary to have a greater pressure upon the drill than the hand lever described will furnish, and **power feeds,** in which the rate of feed can be varied, as well as other methods of feeding by hand, have been brought into use.

6. Movable Spindle.—It is of very great advantage, too, in some classes of work to be able to move the **spindles** to accommodate the work, and this has been accomplished in several different ways. It is evident, however, that every machine need not embody all these features, but all these and others are seen in the various machines found in well-equipped shops. The peculiar features of each machine are determined by the class of work it has to perform. It must always be remembered that the machine is made for the work and not the work for the machine, and, in distributing the work to the various machines, whether drilling machines or other machine tools, the adaptation of the machine to each piece must be considered.

MEDIUM-CLASS DRILL.

7. Fig. 1 illustrates a machine that is largely used for light and medium-class work, and one or more of this general type is found in every good machine shop. This machine differs somewhat from the elementary machine described, yet it embodies the same essential features.

8. Driving Gear.—The spindle *a*, Fig. 1, is driven by means of a pair of bevel gears *b*, *b* and a belt running on a pair of stepped or cone pulleys *c*, *c*. The four steps on

the cones furnish four different speeds, any one of which may be obtained by simply throwing the belt to the desired step. A belt running from the pulleys *d* and *e* to a countershaft transmits the power to the drill. Either *d* or *e*

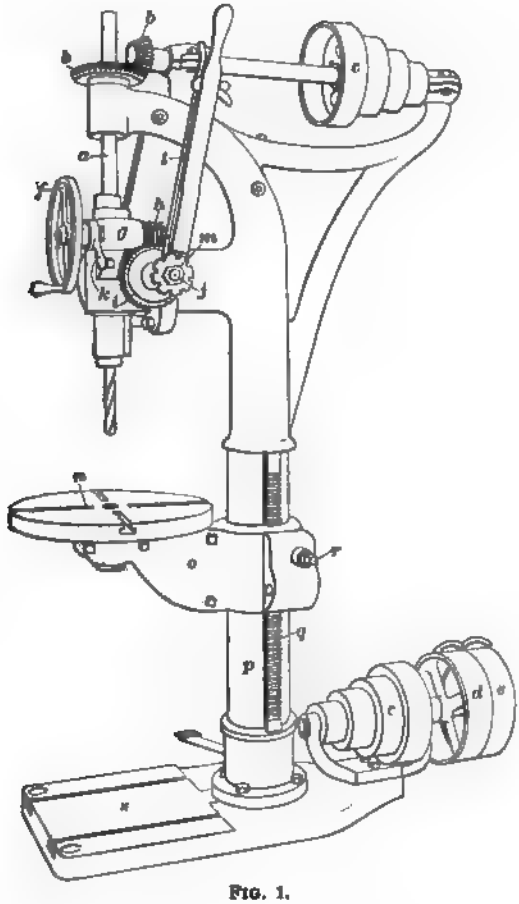

FIG. 1.

runs loose upon its shaft. When the belt is on the loose pulley, the drill stands still. To start up the drill, the belt is shifted from the loose to the tight pulley, which is keyed rigidly to the shaft, and therefore transmits the power to the pulley *c* and to the drill.

9. Feed.—In addition to the lever feed already described, a **wheel feed** is provided. This consists of a hand wheel *f* keyed to a shaft that has its bearing in the hub *g*, and on the other end carries a worm *h*, which engages with a worm-gear *i* mounted on the lever shaft *j*. It will be seen that a much greater pressure can be put upon the drill point with the hand wheel and worm than with the lever, and it is therefore used for the heavier work, while with small drills and materials that are easily cut, the lever is used.

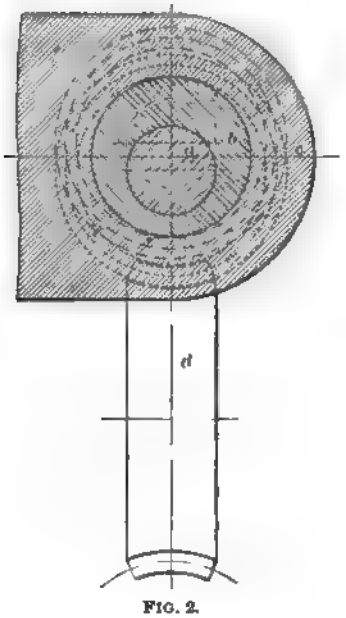

FIG. 2.

Provision for using either method at will is made as follows: An eccentric bushing in the bearing *g*, in which the hand wheel and worm-shaft is carried, may be rotated by moving the small hand lever *k*, thus carrying the shaft out until the worm *h* does not engage with the gear *i*. Fig. 2 illustrates how this is done; *a* represents the hand wheel and worm-shaft; *b*, the bushing; *c*, the bearing; and *d*, the worm-gear. When *b* is in the position shown, the worm and worm-gear engage with each other, but when *b* is turned to the position shown by the dotted lines, the shaft *a* and the worm are carried with it and the worm and worm-gear are out of contact. The shaft *j*, Fig. 1, is then free to be turned by the hand lever. When it is desired to use the wheel, the lever must be disengaged. In the machine shown, the hand lever turns the shaft *j* by means of the spring latch *l*, which engages with a notched wheel *m* keyed to *j*. To disengage the lever, it is necessary simply to hold the latch in its raised position. This is done by means of a catch at the top of the lever.

10. Table.—The **table** *n* is supported on the arm *o* and may be rotated about its center, while both arm and table revolve about the column *p*. The table may be raised and lowered by means of a gear that engages with the rack *q*, and is turned through the medium of a worm and worm-gear with a wrench or crank applied to the square *r*. The drill foot *s* is used as an auxiliary table upon which work that is too large for the table *n* may be placed.

11. Adjustment and Clamping.—This arrangement will accommodate a wide range of work, while all operations and adjustments are under the complete control of the operator. It must be remembered, however, in dealing with these machines, that as the machine is made more flexible, so as to accommodate a wider range of work, a larger number of parts and joints are introduced, and greater care must be taken to keep every part in perfect adjustment. When a piece is set, and the table moved so that the drill is exactly central with the hole to be drilled, the table should be firmly clamped by tightening the bolts in all its movable joints.

HEAVY TYPE OF DRILL.

12. A heavier machine of this same type is shown in Fig. 3. The driving mechanism is furnished with a back gear at *a*, in order to supply a greater variety of speeds. The bevel gears driving the spindle are enclosed at *b*.

13. Feed. — This machine is supplied with a rapid **hand-lever feed** operated by the lever *c*, a **hand-wheel feed** operated by the wheel *d*, and a **power feed** operated by means of a belt running on the cone pulleys *e* and *f*, the latter being keyed to the main driving shaft, thus transmitting the power to a pinion and rack on the spindle, through the bevel pinion and gear *g* and *h* and the worm and worm-gear *i* and *j*. The power feed is thrown in and out by means of a clutch *k*, which is controlled by the pin *l* running up through the vertical feed-shaft. When both the power and

hand-wheel feeds are to be thrown out, in order to use the rapid hand-lever feed, the bearing *m* is moved out in the direction of the arrow *n*, by turning the rod *o* with which

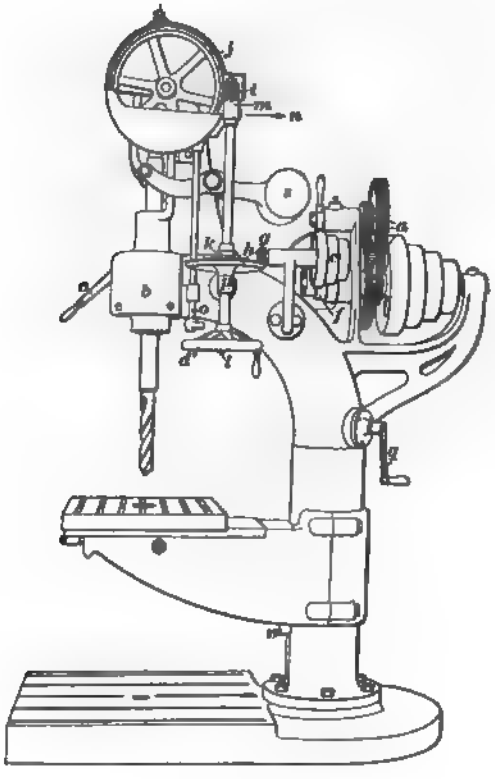

FIG 3.

the bearing is connected, the bearing *p* being pivoted so as to permit the bearing *m* to swing. A counterweight *s* balances the weight of the spindle and reduces the friction of the feeding device.

14. Table.—The table swings about the column as in Fig. 1, but, instead of rotating about its own center, it has a straight-line adjustment in the direction of the center line of the arm, which permits a straight line of holes to be

drilled without moving the arm. The table is raised and lowered by means of a crank q connecting through gears with a screw in the column that carries the nut r upon which the arm rests.

SIMPLE RADIAL DRILL.

15. A machine that is designed for a class of work that cannot well be mounted upon a drill-press table, either

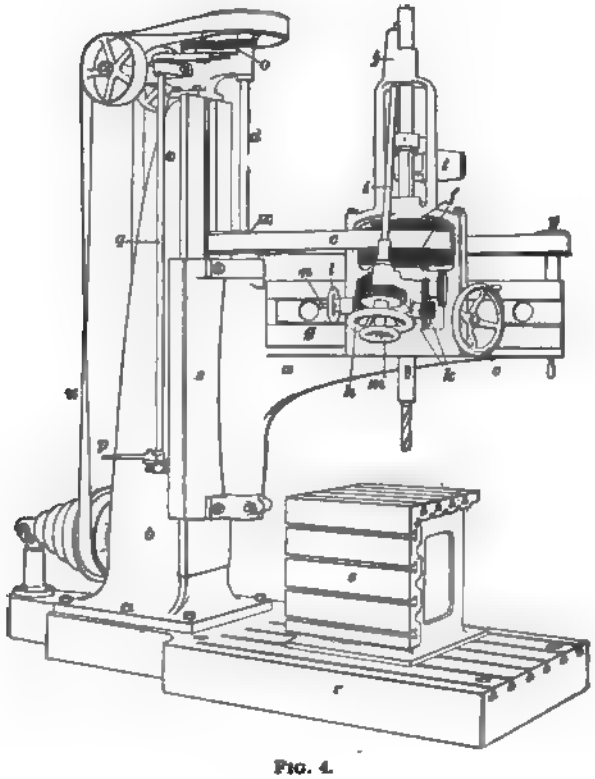

FIG. 4.

because of its size or weight, is shown in Fig. 4 and is called **a radial drill.**

16. Driving Gear.—The spindle is carried in a head that traverses back and forth upon a radial arm *a*, which is hinged upon a vertical slide *s* on the column *b*. The spindle is driven by means of a belt *c*, which runs over pulleys *x* on the shaft *d* and *y* on the end of the arm, while an intermediate pulley that travels with the head, and about which the belt is carried by means of an idler, transmits the motion to the spindle. The plan of the belt *c* is shown in Fig. 5. The driving pulley *x* is splined upon the shaft *d*, while the pulley *y* is supported on the outer end of the arm *a*; *z* represents the driving pulley on the drilling head, and *w* represents the idler. The motion is transmitted either to the spindle direct or through back gears shown at *f*, Fig. 4. A counterweight *t* balances the weight of the spindle, thus relieving the feeding device. The head is traversed by means of a hand wheel *v*, which has a worm on the other end of its shaft engaging with the rack *g*.

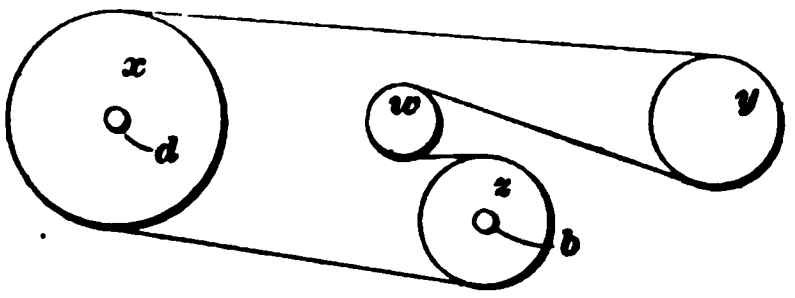

FIG. 5.

17. Feed.—Both hand feed and power feed are provided. The former is operated by the hand wheel *h* on the oblique shaft *i*, which has a worm *j* on its end that engages with a rack on the upper end of the spindle. The power feed is obtained by means of a worm on the spindle running in a worm-gear, and is connected with the oblique shaft *i* by means of the gears, worm, and worm-gear at *k*. The hand feed or power feed is thrown in as desired by means of the hand wheels *l* and *m* and the pin *n*.

In the larger sizes of this type of machine, a power traverse for the head is also furnished, taking its power from a screw in the radial arm *a*, which is connected with the vertical shaft *d* by means of a pair of bevel gears. The arm *a* and slide *s* are raised by means of a screw in the column that runs in a nut attached to the slide between the guides of the upright. The power is transmitted to this screw

through the gearing at *o*, and is controlled by the handle *p* on the lower end of the vertical rod *q*.

18. Foot-Plate and Table.—The work for which this type of drill is used is usually large and is generally supported on the foot-plate *r*, which is finished and fitted with slots for T-head bolts. The table *s* is, however, provided for smaller pieces, or pieces that require side support. It is finished and has slots for supporting work on the top and sides. For light work, its own weight is sufficient to hold it in place, but for very heavy cuts, or where there is a tendency to tip, it should be bolted down.

19. Setting the Work.—The same general rules that apply to ordinary drill-press work apply to the radial drill. The work must always be so set that there will be no spring in the piece when the clamps are tightened, and should be so placed that as much work as possible may be done without resetting.

GEAR-DRIVEN RADIAL DRILL.

20. The general type of radial drill already described is often driven by means of gearing and rods instead of the belts *u* and *c*. The power is transmitted directly from the main driving cone to a vertical rod in the center of the column, then, by means of gears at the top of the column, to a vertical rod corresponding to *d*, Fig. 4. Another pair of bevel gears connect this rod with a horizontal rod on the arm *a*, which is geared to the spindle in the drilling head.

RADIAL DRILL WITH OUTER COLUMN.

21. The type of radial drill mentioned above has acquired a large place in drilling operations, and for work where extreme accuracy is not essential, it has given excellent satisfaction. There are cases, however, where the spring of the various overhanging parts causes errors that

are objectionable, and, to overcome this spring, a supporting column at the outer end of the radial arm is sometimes added. Fig. 6 represents such a machine, which is called a **radial drill with outer column.** The column *a* with the radial arm *b* swings in an arc about the center of the main column *c*, and, when moved to the right position, it is

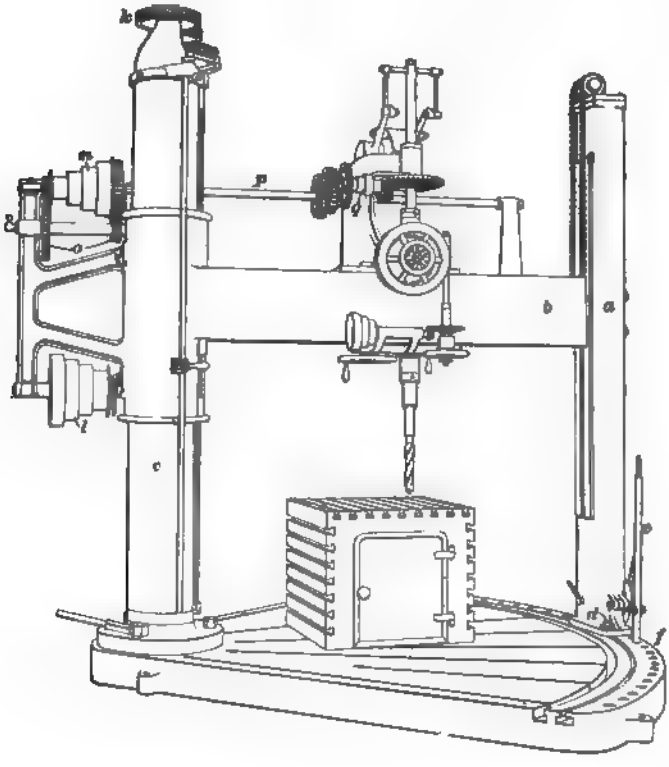

Fig. 6.

clamped to the bed by means of the bolts *d*, thus forming a solid support for the arm. A simple device for moving the outer column consists of a lever *e* linked to the foot of the column, as shown. The lower end of the lever enters a series of holes *f* in the bed, thus forming a series of fulcrums for the lever as the column is drawn along.

Aside from the outer column and the provision for moving it, this machine is substantially the same as an ordinary gear-driven radial drill. The power is transmitted to the spindle through a pulley that connects with a vertical rod in the center of the column *c*. This rod is geared to an outer vertical rod that moves with the radial arm through the gears at *k*. The power is transmitted to the cone *l* through a pair of bevel gears, thence by belt to the cone *n*, which is connected either directly or through back gears *o* to a horizontal shaft *p*, which is connected through gearing with the drilling head *q*.

UNIVERSAL TABLE.

22. It is often necessary to drill holes at an angle in radial machines. For the smaller pieces, a **universal table,** Fig. 7, may be used, upon which the piece is set and tilted to the desired angle. The table is bolted to the foot-plate by the lugs *a*, *a*. It may be turned about its center upon the circle *b*, while the top can be set at an angle, as shown, by means of the handle *c* and a worm and worm-gear *d*. Clamping bolts on each circle hold the table firmly in place when it has been adjusted to a desired position.

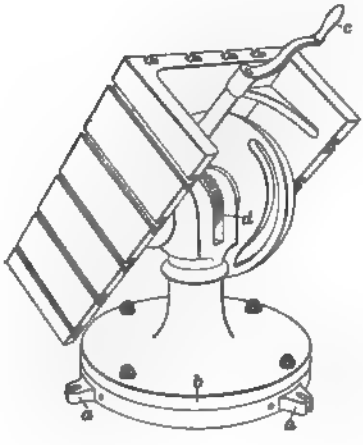

FIG. 7.

UNIVERSAL RADIAL DRILL.

23. In large work that cannot be supported upon a universal table, a radial drill with an arm that can be rotated about its own center, and equipped with a head that can be

thrown to any angle, as shown in Fig. 8, has been found very useful. The rotation of the arm is obtained by pivoting it upon the center of the shaft *c* Such a machine is called a **universal radial drill.** The circle *a*, upon which the arm is rotated, is graduated in degrees, and, as the arm may be turned through the entire circle, an adjustment to any

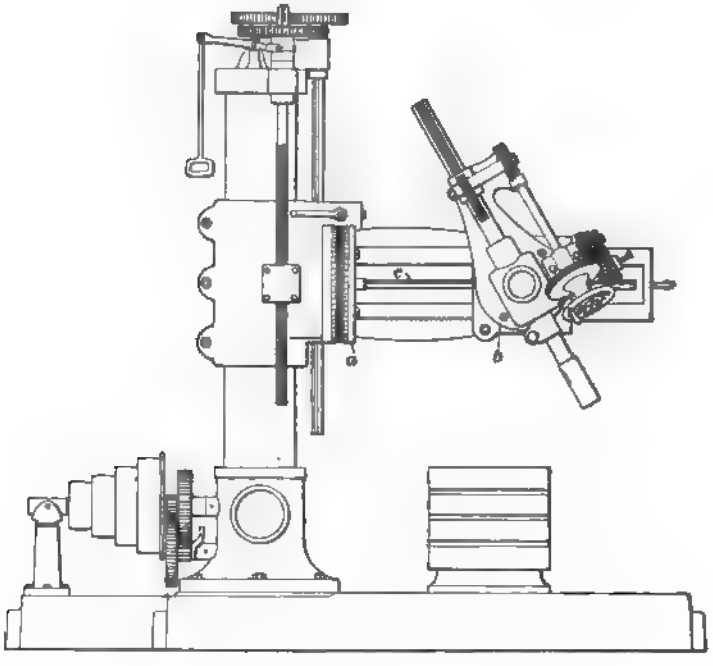

FIG. 8.

angle may be made very quickly and accurately. The circle *b* on the head is also graduated, thus furnishing a ready means of setting the spindle to almost any conceivable angle. This machine, while differing from the radial drills already described in some details, maintains the same general construction. A careful inspection of the illustration will readily explain the utility of all the parts.

MULTIPLE-SPINDLE DRILL.

24. Object.—The present tendency toward specialization has brought about the use of tools especially designed to save time and prevent error in the duplicating of parts.

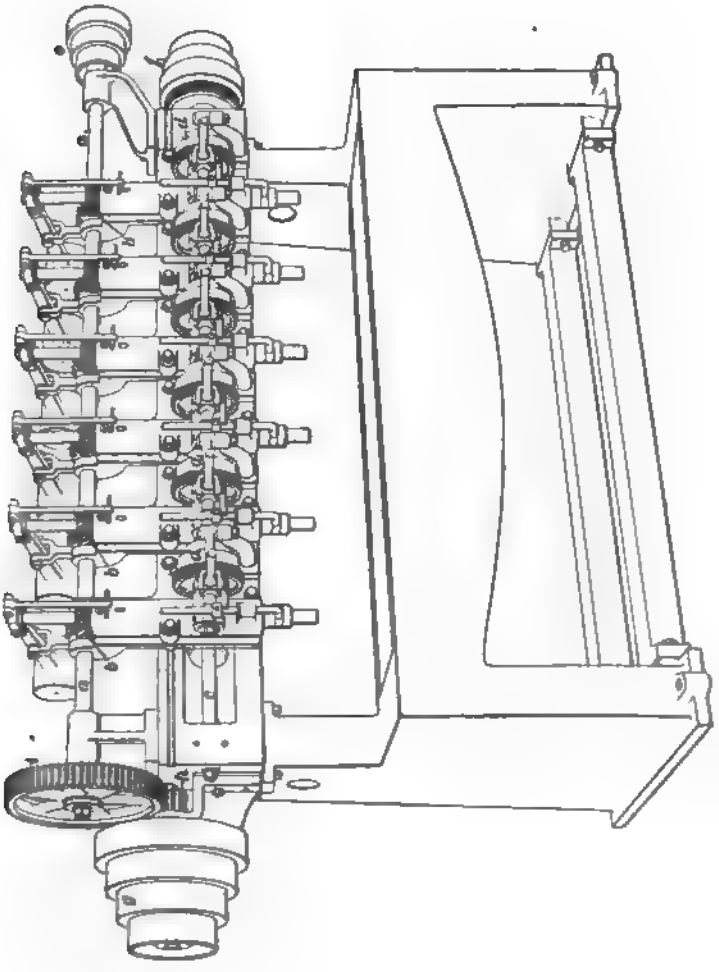

FIG. 9.

It has been found that in drilling a large number of holes in one piece, time may be saved by using **multiple-spindle drilling machines.**

25. Spindles in One Plane. — Fig. 9 illustrates a machine of this type with six spindles that have their center lines all in one plane. The spindles are driven from the same shaft *a* by means of worms and worm-gears *b*, the shaft *a* connecting with the driving cone *g* through the gears *h* and *i*. The motion for the feed is taken from the shaft *c*, running in the cross-rail, and is transmitted to each spindle by gearing and clutches at *d*, the feed-shaft *c* being driven from the shaft *a* by a belt on the cone pulleys *e* and *f*, which also furnish the variable feed.

The table on the machine shown is not movable, and only work of a moderate depth can be drilled in it. This same general type of machine is, however, frequently made with an adjustable table. The spindles can be moved along the cross-rail and adjusted to any distance apart, within the range of the machine, while any number of holes from one to six may be drilled at the same time.

This type of machine is used principally for plate work, structural iron, and other light work requiring a large number of holes in a straight line. Modified forms are used largely for drilling locomotive frames and bridge chords, and for tapping nuts in large numbers in bolt and nut factories.

26. Universal Adjustable Spindles. — Multiple-spindle drills are frequently made with **universal adjustable spindles.** The universal joints allow the spindles to be moved in and out as well as along the cross-rail. With this arrangement, holes that are not in line with one another may be drilled at one setting, or if the holes are to be tapped or reamed and are far enough apart, half the spindles may be equipped with drills and the other half with taps or reamers, so that when the holes are drilled the piece may be moved to the other set of spindles and finished without taking it off the machine.

Jigs should always be used in drilling with universal joint spindles, since the short lower bearing is liable to become slightly worn or may not be in perfect adjustment,

thus introducing inaccuracies. A well-constructed jig guides the drill perfectly and avoids this danger.

27. Vertical Flange-Drilling Machine.—A very useful multiple-spindle drill is shown in Fig. 10. Here the spindles may be adjusted about the center of the main driving spindle *a*. The drill spindles are all equipped with

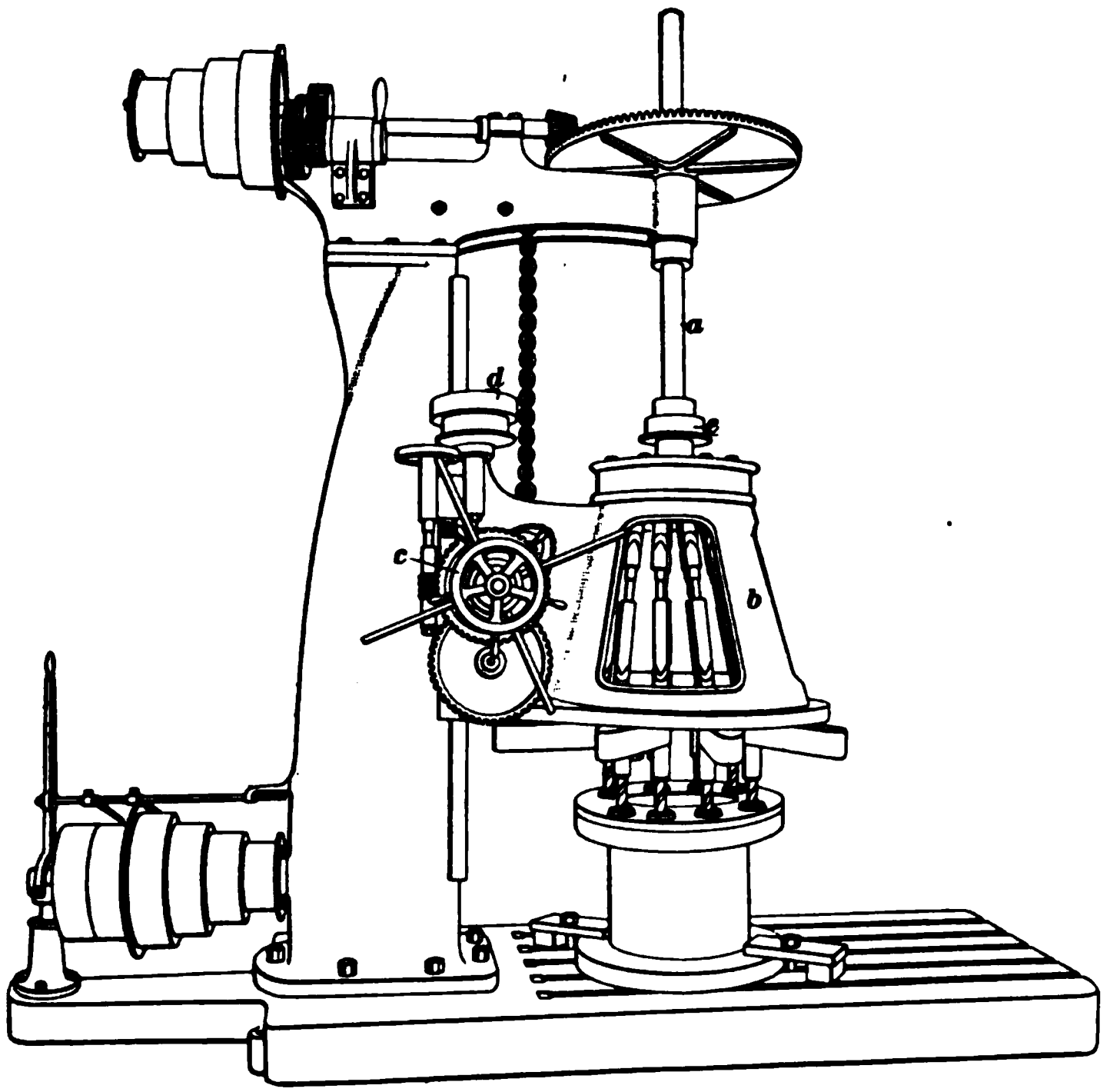

FIG. 10.

universal joints and each one moves independently of the others. This enables the machine to drill as many holes as there are spindles in one circle, or the spindles may be arranged in two or more circles or set irregularly, as desired.

This machine is designed for drilling engine cylinders, pipe flanges, valve bodies, etc., but it may be used for almost any work where such a grouping of drills is desirable. The illustration shows a piece of pipe clamped upon the drill

table with jig attached and drills inserted, ready for drilling. The power is transmitted to the spindles by a spur gear on the main spindle *a*, and a small pinion on the upper end of each of the drill spindles enclosed in the upper part of the head *b*. The drill spindles are held vertically in both the upper and lower bearings. The feed is obtained by lowering the entire head *b*. This may be done either by means of the pilot wheel *c*, or by power by means of a belt running on the cone pulleys *d* and *e*.

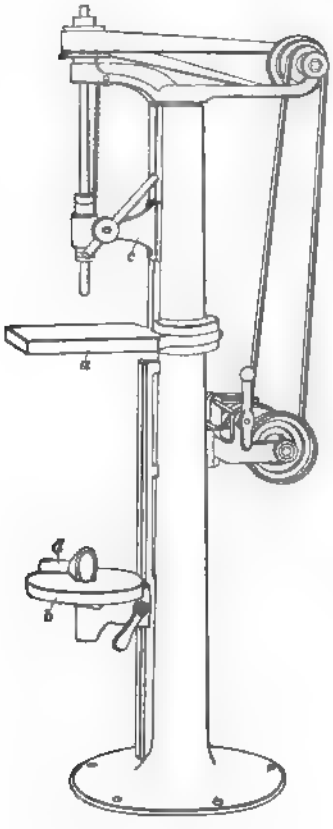

FIG. 11.

28. Horizontal Flange-Drilling Machine. — Multiple-spindle drilling machines with two heads set horizontally upon a long bed, intended especially for drilling the two ends of engine cylinders, pipes, etc. at the same time, have recently been placed on the market. The construction of the heads is practically the same as that shown in Fig. 10, the only difference being that they are placed horizontally on the bed. The work is held on a table between the two heads.

SENSITIVE DRILLS.

29. The drilling machines already described have been designed for the heavier grades of work. There is, however, a large amount of light work in a machine shop upon which drills must be used, and which is too small to stand the strain of heavy machines. This has led to the development of a lighter and more sensitive class called **sensitive drills.**

Fig. 11 illustrates a machine of this class. The power is transmitted directly to the spindle by means of belts, while the speeds are varied by the use of the ordinary cone pulleys. The feed is of the simple, hand-lever, pinion-and-rack type, already described, which is the most sensitive arrangement in use, any variation in the working conditions of the drill point being readily felt with the hand upon the lever. The table *a* of the drill shown has no vertical adjustment, but may be swung about the center of the post, out of the way of the center line of the spindle, so as to permit long pieces to be set upon the lower table *b*. The lower table and the lower spindle bracket *c* are both adjustable vertically, thus permitting pieces of greatly varying lengths to be taken into the machine.

This class of machine is used largely for center drilling in shops where a special machine for this purpose is not available. The funnel-shaped piece *d*, commonly called a *cup center*, is a special device for centering the lower end of a shaft that has been cut off straight. The shank is set in a hole in the center of the lower table *b*, the center line of which coincides with the center line of the spindle. The cupped-out top of *d* is made a perfect internal cone, with its axis in the center of rotation of the spindle. A shaft that is set into this cup and is held with its center under the drill at the upper end will, therefore, have its center line in the axis of rotation, and a hole drilled into it, when held in this position, will be concentric with the outside of the shaft throughout its entire length.

PORTABLE DRILLS.

30. Introductory.—In recent years there has been a marked development in light, portable machines for drilling and kindred purposes. The extreme lightness of their construction and the small space that they occupy have made them available for much of the work that was formerly done by hand, and a large amount of time and hard labor may

be saved through their use. Most of these machines are so light that they can be carried about and operated by one man.

31. Classes of Machines.—These machines may be classed under three heads, deriving their names from the manner in which they are driven, viz.: *pneumatic drills*, *electric drills*, and *flexible-shaft drills*.

32. Pneumatic Drills. — Portable pneumatic tools are made in a large number of different forms. Some are

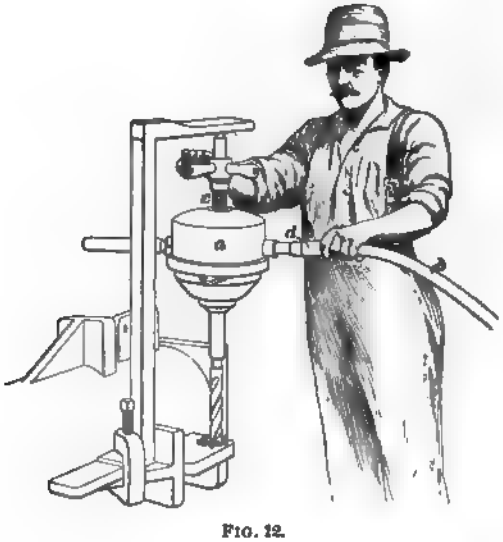

FIG. 12.

driven by means of oscillating cylinders, others by means of vanes, acting through gearing that gives the proper reduction of speed.

Fig. 12 shows one of the oscillating cylinder type set up for drilling. The cylinders and gearing are enclosed in a case *a*. The air, which for this class of work is generally compressed to about 80 pounds per square inch, is brought from the air compressor or storage reservoir to the drill through a rubber tube *b*, the tube usually being protected by means of wire wound spirally about it. The drill is

fed by means of a screw *c* and is operated as indicated in the illustration. The air is turned on or off and the flow regulated by means of a valve *d*, which is controlled by the hand of the operator. This type of machine will drill and ream holes up to 3 inches in diameter, and may be used for various other operations, such as tapping, grinding steam joints, boring in wood, etc.

33. Electric Drills. — Electric machines that are used for the same operations embody the same general

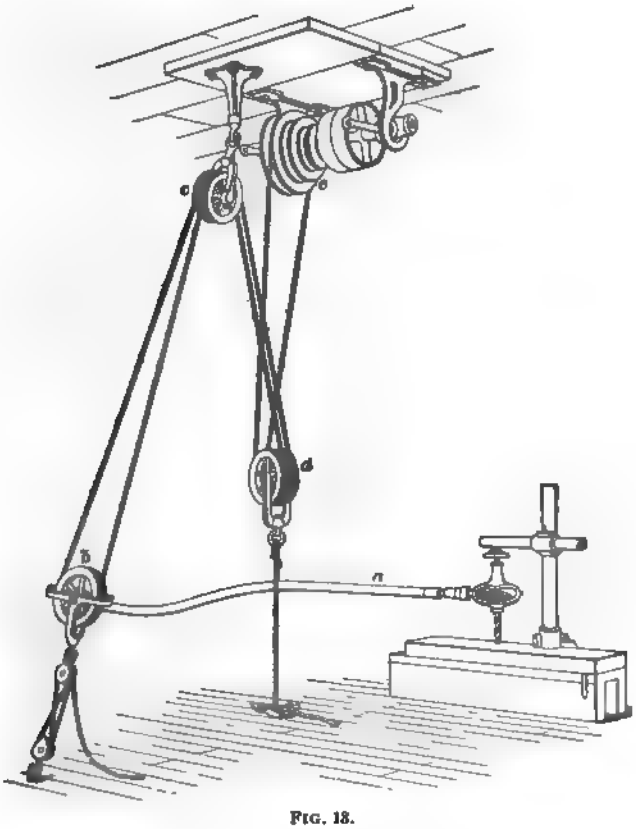

FIG. 18.

features as the pneumatic machines, the difference being that an electric motor is substituted for the air motor.

34. Flexible Shaft.—Fig. 13 illustrates a **flexible shaft** and drilling machine set up ready for use. The power is transmitted to the shaft through a rope drive, the rope running from the pulley *b* on the driving end of the shaft, over a pair of idlers *c* hung from the ceiling, to a pair of idlers *d* attached to the floor, as shown, thence to the pulley *e* on the countershaft. By either lengthening or shortening the rope attaching the idlers *d* to the floor, the pulley *b* may be moved to any location within the reach of the driving rope. A variable speed is obtained by means of the step pulley *e*. The shaft is made by winding successive layers of wire in opposite directions about a center wire, as shown in Fig. 14, the outside being covered with leather.

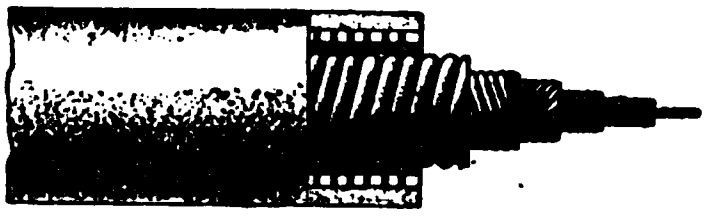

FIG. 14.

35. Drilling Machine. — The **drilling machine** used with the flexible shaft is shown in Fig. 15. It consists of a pair of bevel gears *a* and *b* mounted in a frame *c*, a spindle *d*, feed-screw *e*, and wheel *f*. The bevel pinion *a*, which is covered by a guard, is attached to the flexible shaft, while the bevel wheel *b* is splined upon the spindle *d*. The drill is held in the spindle in the usual way.

The illustration shows how the machine is set up for drilling with the flexible shaft, by means of which it may be operated at any angle. This machine may also be used for drilling horizontal holes in a vertical drill press, or for drilling vertical holes in a horizontal machine, by attaching it directly to the drilling-machine spindle instead of the flexible shaft.

36. Electrically Driven Flexible Shaft. — When there is no running shaft available, the flexible shaft may receive its power from any convenient portable source, as a small electric motor mounted upon a suitable truck. The shaft is connected to the motor by means of a universal joint, in order that the arrangement may be as flexible as possible.

37. Heavy Portable Machine Tools. — The tendency toward larger units in manufactories of various sorts has introduced a new phase in machine-tool operations. Parts that are too heavy to be machined in the ordinary

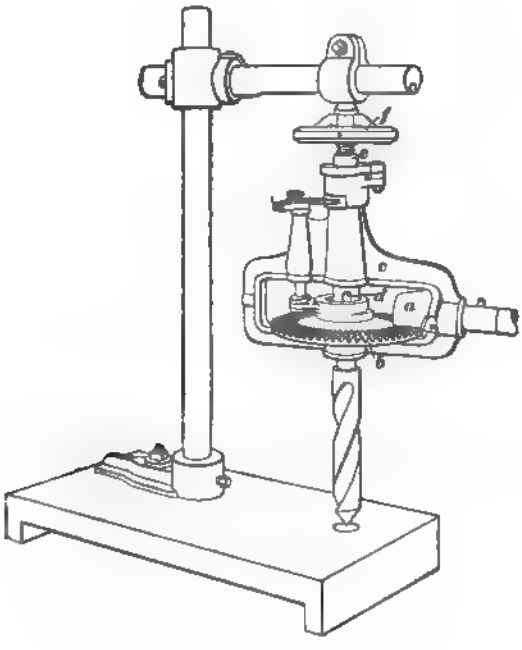

FIG. 16.

stationary machine tools are now met with quite commonly in machine shops. This has led to the use of large cast-iron floors upon which the work is placed, and portable machine tools, which may be carried to the floor and set up in any position to accommodate the work.

Fig. 16 illustrates a case where a 135-ton flywheel was to be drilled at intervals along the rim for the purpose of joining the sections in which it was cast. The individual parts were machined and fitted together, but, to make the joints, several 2-inch holes had to be drilled through 26 inches of solid metal. An ordinary radial drill was lifted from its

base and set upon the rim, as shown. When the holes at one joint were drilled, it was moved to the next joint and the operation repeated, until all the joints were completed. A

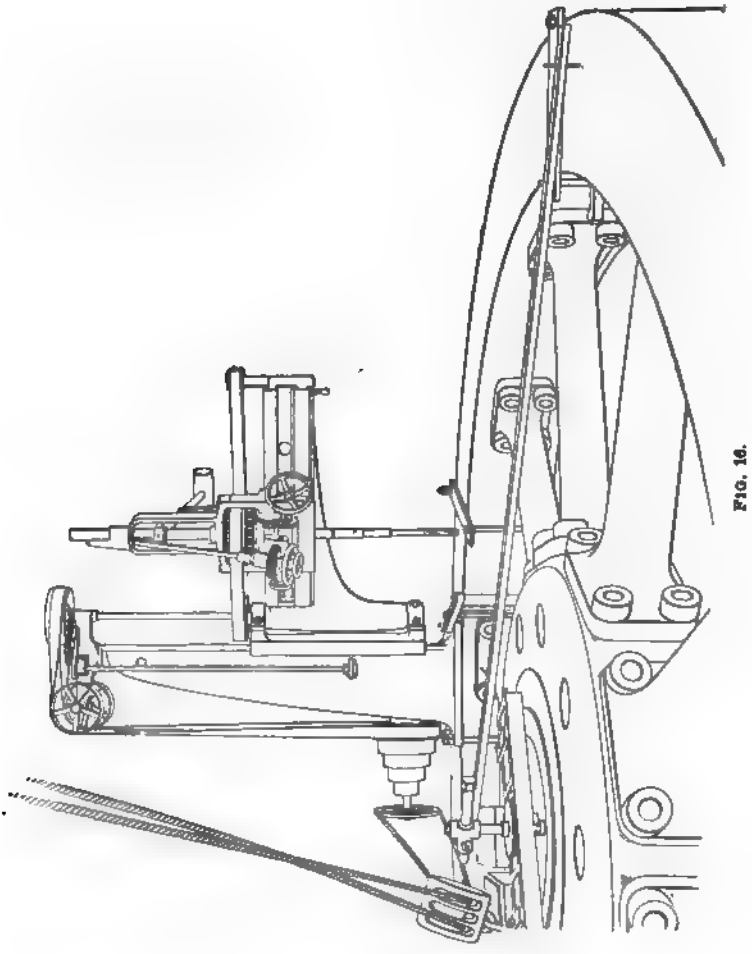

FIG. 16.

rope drive was used in transmitting the power to the drill. The idlers were attached at the center of the wheel, thereby making it possible to move the machine to any point on the rim without changing the length of the rope.

BORING MACHINES.

INTRODUCTORY.

38. It has already been stated that the machine tools of the present day have their origin in the lathe, which stands out as the parent machine tool. Some of the different machines developed have passed through various stages and forms in the course of their evolution and have become distinctive types in themselves, bearing in their general appearance no resemblance to the machine from which they were derived.

This is especially noticeable in machines used in boring operations, these being regarded by the present-day observer as a distinctive type of machine tool in themselves. Two subdivisions have even been made, each division representing a type of boring machine adapted to a certain class of work. These two types, namely, *vertical* and *horizontal boring machines*, are so widely different in their construction that the most careful observation is necessary to establish their relationship. While they are known as boring machines, they both perform other operations. The vertical type is designed for turning as well as boring, and is often called a *boring and turning mill.* The horizontal type usually performs drilling and some classes of milling operations, as well as boring, hence the name *horizontal boring, drilling, and milling machines.*

VERTICAL BORING MACHINE.

GENERAL DESCRIPTION.

39. Introductory.—Fig. 17 represents the ordinary **vertical boring** and **turning mill** found in up-to-date machine shops. The work is clamped upon a rotating table *a*, which is provided with slots for T-head bolts and a circular hole in the center, as shown. The cutting is done by

means of tools in the lower ends of the boring bars *b*, *b*, there being on the machine illustrated two of these bars carried in two saddles upon a cross-rail *c*.

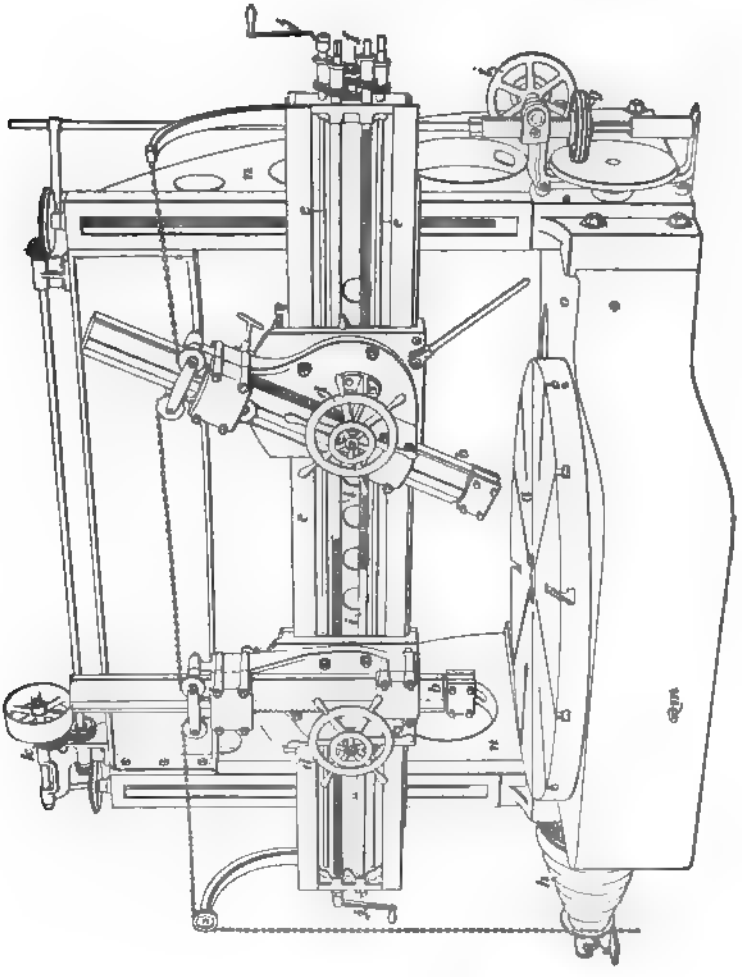

FIG. 17.

40. Control of Cutting Tools.—The tools are raised and lowered by means of the hand wheels *d*, *d*, or by power through the rods *e*, *e*, which are geared to the boring bars

and connect by means of gearing at *f* and a friction wheel and disk at *g*, through the bed of the machine to the driving cone *h*. The tools are fed horizontally by means of the screws *i*, *i*, which traverse the saddles upon the cross-rail. These screws may be operated either by hand, with the handles *j*, *j*, or by power through the gearing at *f* and friction wheel and disk at *g*, already referred to. Reversing devices are provided, and the whole machine is entirely under the control of the operator. The cross-rail is raised and lowered by power through the pulley and gearing at *k*.

41. Control of Feed.—The rate of feed is regulated by the friction wheel and disk at *g*. The wheel can be raised and lowered by turning the hand wheel *l*, while the position of the disk does not change. It will be seen that as the wheel approaches the circumference of the disk, it will make more revolutions per revolution of the disk than when near the center. When the wheel is carried below the center of the disk, the direction of motion is reversed, while the same range of speeds is obtained by moving it toward the circumference. A great variety of both vertical and horizontal feeds in either direction is thus obtained, while clutches and reversing mechanisms in the saddles place the tool perfectly under the operator's control. Counterweights are provided wherever possible, in order that all parts may be operated easily.

42. Arrangement of Feed. — The feeds are so arranged that one tool may be turning the outside of a piece while the other is boring, or they may both be either boring or turning on the same or different diameters, or one tool may be facing the top while the other may be either boring or turning. When working on different diameters, the tool on the smaller diameter has a slower cutting speed than that cutting on the larger, and the speed must, therefore, be adjusted for the larger diameter. These operations are virtually the same as those carried on in the lathe, and the tools used for these operations in the two machines are identical.

43. Table.—The **table** is rotated by means of an internal gear on its lower side, and a pinion that is connected through a pair of bevel gears to the driving cone *h*. A back gear like that on a lathe is provided, which, with the different steps on the cone, furnishes a wide range of speeds.

The table is supported in the center upon a long vertical spindle running in a bearing near the top and another bearing at the bottom, while a step bearing at the lower end takes the thrust. The rim of the table runs in a groove in the bed, which is flooded with oil, and, when running slowly on heavy work, the greater part of the weight is taken on this rim.

Provision is made for raising and lowering the table when running at high speeds on light work, so that the entire load is taken by the spindle. A screw *m* connects with a wedge under the thrust bearing by means of a nut and lever, and, by turning the screw in one direction, the wedge is forced in, while rotation in the opposite direction withdraws it. Conical turning or boring may be done by setting the head at an angle, as shown at the right hand of Fig. 17.

EXTENSION BORING MILL.

44. In shops where there is occasionally a piece of large diameter to be turned, but where there is not enough of this class of work to warrant the purchase of a large boring mill, an **extension boring mill** may be used to advantage. On an extension mill, the bed *o*, Fig. 17, is made with an extension at the back and ways on top, on which the housings *n* rest, and on which they may be moved back, so as to accommodate a larger piece upon the table. The cross-rail is, of course, carried back with the housings, and, in order to do boring, it is necessary to use a vertical boring bar supported from an arm attached to the cross-rail and resting in the center of the table. As the table revolves, the bar must stand still. A hub at the center of the work may be faced by using an ordinary facing head, such as is used in facing

the ends of cylinders on a horizontal boring mill. This simple provision in a mill designed for the average work of a shop will enable larger pieces to be machined at a comparatively small increase of cost for machine tools.

BORING AND TURNING OPERATIONS.

45. Setting the Work.—The horizontal table of the boring mill makes the setting of the piece differ from that of the lathe and resemble the setting upon the drilling-machine table. The piece must, of course, be set perfectly central with the center of rotation as in the lathe, and must be blocked up and clamped as on a drilling-machine table, or set in jaws as in corresponding lathe operations. When turning and boring a flat part, as an engine-crank disk, for instance, the part is held in jaws precisely as a piece of similar form would be held on a lathe face plate. When the center of such a piece has been bored, the top faced, and as much of the outside turned as the jaws will permit, the piece is turned over, trued up with the center, again gripped in the jaws, and the remaining parts finished.

When a piece is held in this way, it is always well to use one or more drivers, to prevent the piece from yielding to the tangential pressure of the tool and slipping in the jaws. Irregular pieces call for some ingenuity on the part of the operator, but the principles involved are the same as those in the case described.

46. The following principles may be taken as a guide in all emergencies. The piece must always be set with the circumference to be finished exactly concentric with the center of rotation, and the center line must be perpendicular to the plane of the table. If the lower surface is irregular, it must be blocked up, so that the conditions mentioned above are true, and must then be either gripped with jaws or clamped as in the drill press, drivers being provided to take the twisting strain. The drivers may be simply angles, or any devices to prevent the part from turning on the table.

Care must also be taken so that the piece shall not be sprung out of its true shape when clamped down.

47. Example of Setting.—Fig. 18 illustrates how an irregular piece may be secured on the table. Before setting a piece, the table must be carefully cleaned and lowered so that the weight is taken on the outer rim. When this is neglected, there is danger of injuring the step bearing and also of springing the table. The piece is then placed on the table, set approximately central, and leveled up by blocking at regular intervals. In Fig. 18, screw jacks *a* are used in leveling up. When the piece is approximately level, a tool

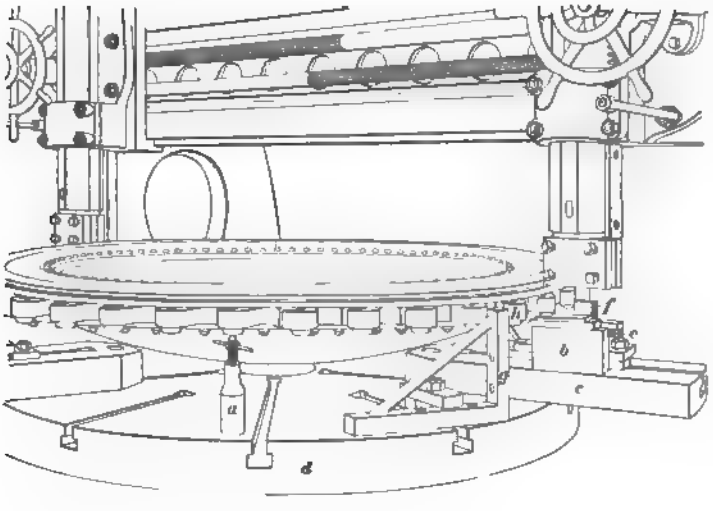

FIG. 18.

is brought very near the circumference to be turned, and the table is rotated slowly. Careful observation of the distance between the part and the tool will show in which direction it must be moved in order to bring it perfectly central. At the same time, the distance from the tool to the upper surface may be observed and the piece brought level as well. Several trials may be necessary before the correct position is obtained. Jaws *b*, which are supported upon extension arms *c*, which in turn are bolted to the

table *d*, are used for centering and clamping. The jaws are equipped with adjusting screws *e* to control the grip *f*. The jaws are also provided with clamping bolts (not shown) by means of which they are secured after being adjusted.

48. All adjustments having been made, two drivers, one on each side of the center, are set against any available surface. In the illustration, an angle *g* is set against a lug *h* and is clamped on the table, as shown. The piece having now been properly secured, it may be well to test the setting again, and to look over all bolts, so as to be sure that every part is fastened securely, after which the machine may be started, the speeds properly adjusted, and the tools fed as required. The cutting conditions are the same as in a similar operation in a lathe.

The piece shown is held by three vertical jacks *a*, three jaws *b*, and two drivers *g*. On pieces where a flange or any other surface upon which a clamp may secure a hold is available, clamps are used in preference to the jaws, drivers being applied to prevent any sliding on the table. In some cases, the weight of the part, together with the clamp, furnishes grip enough on the surface of the table to prevent any slipping, but this grip is very uncertain, and it is better not to depend on it entirely. Other special boring operations are described in *Drilling and Boring*, Part 3.

HORIZONTAL DRILLING AND BORING MACHINES.

49. Introductory.—Horizontal drilling operations are so closely associated with horizontal boring that they will be considered together. Nearly all horizontal machines are designed for drilling, boring, and milling, the spindle being designed for any of these operations. The economy of such an arrangement is evident when it is considered that the boring operation requires that a hole, sufficiently large to permit a boring bar to be passed through it, be previously formed, either by coring or drilling.

Small holes, up to about 2 inches in diameter, are usually drilled, and a machine that will do both the drilling and boring with one setting saves a large amount of time. Resetting, or moving to another machine, frequently takes more time and requires a larger number of men than the drilling or boring, while in the meantime the machine is standing idle and the additional service of a power crane is often necessary. For this same reason, it is an advantage to be able to perform a milling operation at the same time. It will be observed that these three operations require practically the same spindle action, and can, therefore, be carried on in the same machine. It is economy to have machine tools so arranged that the greatest possible amount of work may be done with one setting. This should always be borne in mind when selecting and arranging machines, as well as in their operation.

50. Drilling and Boring.—It has already been stated that **drilling** consists of sinking circular holes in solid material. **Boring,** as understood in a machine shop, consists of enlarging and truing a hole that has previously been made. This is done by supporting, independently of the piece to be bored, a bar that carries one or more cutters. The center of the bar thus forms the center of the bored hole independently of the center of the original hole. Where the center of the new hole does not correspond with the center of the original hole, the heavy cut on one side will cause the bar to spring and the hole will neither be perfectly round nor straight. One or two light cuts after the roughing cut has been taken usually true it up. When the cut is uneven, therefore, provision should be made for a finishing cut by using a cutter slightly smaller than the desired hole for the first cut.

51. Simple Boring Bar. — There are two different styles of bars used in this operation. The simplest of these is used almost entirely for the smaller holes, and resembles, in construction, the counterbore already described in Art. **69,** *Drilling and Boring*, Part 1.

Fig. 19 represents this type of bar. The end *a* is made to fit either the spindle or some device attached to it. The bar should be as large as the hole will permit, in order

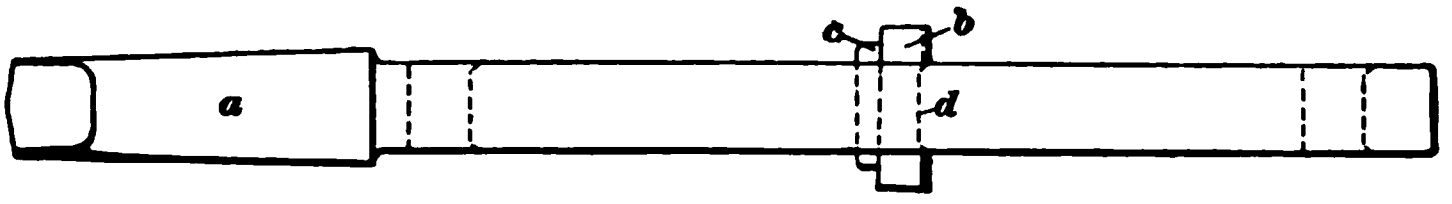

FIG. 19.

that the spring may be reduced to a minimum. The material for the bar should be selected with a view to its stiffness. For the larger sizes, cast iron is often used because of its great rigidity.

52. Cutter Slot, Cutter, and Key.—At the middle of the bar, a rectangular slot is formed to receive the cutter *b* and a key *c*, which holds the cutter in place. The back of the cutter and the front of the key are slightly tapered in order to wedge the key in the slot, the two ends of which are parallel and perpendicular to the center line. When the cutter has been fitted, it should be turned up in the bar, making the ends parallel. The cutting should all be done on the front edges, which are formed with the proper clearance angles. The outer corners are usually rounded slightly.

When no adjustment of the cutter is required, it is well to fit it into the slot with a slight taper running from the outside of the bar, as shown by the dotted line *d*. This enables it to be removed and replaced, or allows other cutters that have been similarly fitted to be inserted in its stead. This will not do for cutters that require adjustment, as the tapered sides hold them firmly in one position. This advantage is, however, so great that it is generally thought better practice to have a set of cutters of different sizes properly fitted to the bar than to use the adjustable form.

53. Location of Cutters.—The cutter is placed at the middle of the bar, since this type travels through the work. The work extends its full length beyond the cutter in both

directions as the latter reaches the ends of the work. A pair of slots similar to that at the middle are put near the ends of the bar, where the ends of the piece are to be faced, and facing cutters are inserted. Thus, the boring and facing will be done with the same bar and with a single setting of the piece.

54. Length of Bar.—This type of bar should be somewhat more than twice the length of the work, in order that there may be room for setting the cutter when the work stands at either end.

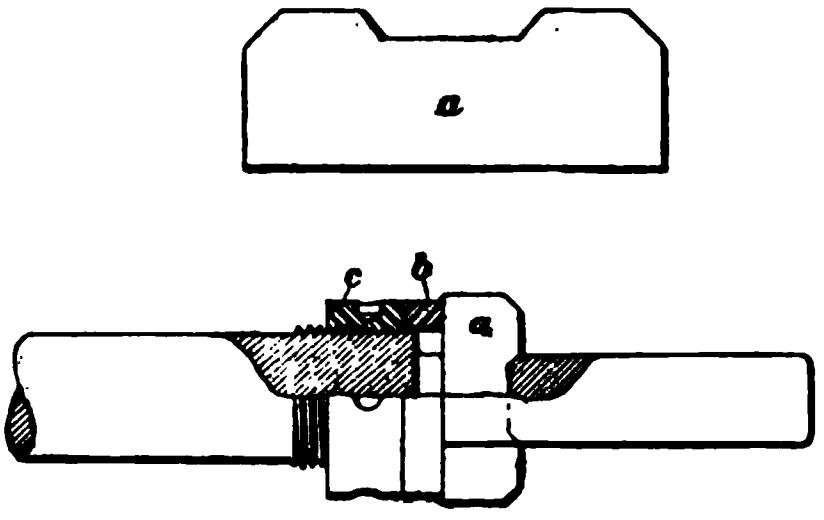

FIG. 20.

55. Nut Support for Cutter. — Another boring bar and cutter of this same class, that possess some excellent features, are shown in Fig. 20. The cutter *a* is notched with tapered sides to fit corresponding tapers on the bar, as shown. A nut *c* and collar *b* are used to hold the cutter instead of the ordinary key. A better support for the cutter is thus provided, while the danger of injury due to the use of the hammer in setting the cutter is entirely eliminated.

56. Boring Bar With Traveling Head.—Another form of boring bar that is used in boring holes of comparatively large diameter is shown in Fig. 21. The bar *a* is usually made of cast iron, cored out so as to furnish the greatest stiffness with a minimum weight. A head *b* is bored to fit the bar and turned on the outside to a diameter somewhat smaller than the diameter to be bored. One or more boring tools *c* are let into the head, as shown, and are held in place by the straps and tap bolts at *d*.

57. Boring Head.—The head is traversed by means of a screw *e*, which runs in a slot in the side of the bar, and a

nut on the inside of the head. The slot is made large enough so that the nut is free to travel from end to end as the screw is rotated. The head is rotated with the bar by means of a key in the head and a spline that runs the entire length of the bar, diametrically opposite the feed-screw. Bearings *f*, *f* support the screw at each end, while it is rotated with reference to the bar by means of a star feed, acting through the gears at *h*.

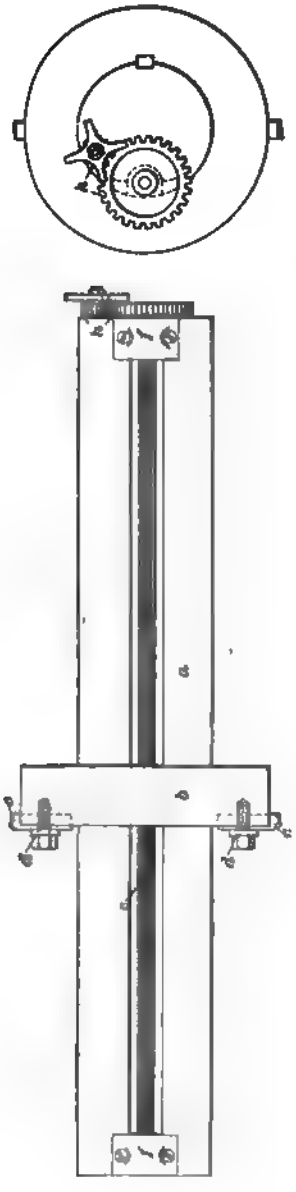

Fig. 31.

58. Rotation of Bar and Support of Outer End.—The bar is rotated by attaching it to the spindle of a boring mill, or by means of special gearing. The outer end of the bar is supported by a bearing carried upon a pedestal that can be moved on the floor to suit the position of the head, and adjusted to any desired height.

59. Facing Head. — This type of bar is generally equipped with a facing head, as described in Art. **70,** that is clamped to the bar, as shown. This head receives its feed in the direction of the length of the bar by moving the whole bar and spindle endwise. The facing tool is fed radially by means of a star feed, as described in the article mentioned.

SIMPLE TYPE OF HORIZONTAL DRILLING AND BORING MACHINE.

60. Head.—One of the simplest types of drilling and boring machines is illustrated in Fig. 22. The general arrangement of the **head** resembles very closely that of a lathe, the cone pulley and back gear being the same. Instead of the ordinary face plate, there is an attachment on the

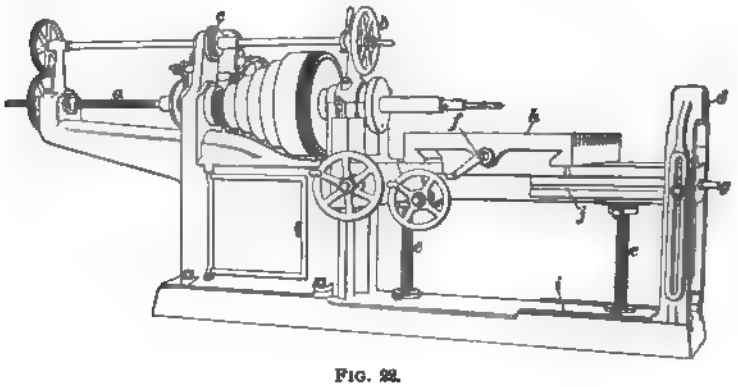

FIG. 22.

end of the spindle for supporting either a drill or a boring bar. The spindle runs through the center of the cone and is so splined that, while it rotates with the driving gear, it may be fed through it by means of the screw *a*, which is turned either by the hand wheel *b* through the shaft and gearing shown or by power through the gearing at *c*.

61. Boring-Bar Support.—An outer bearing *d* forms a support for the outer end of the boring bar. Slots *i* and *j* in the head and the side of the table, as shown, permit this bearing to be moved as near to the work as possible, in order to prevent any unnecessary spring in the bar.

62. Table.—The **table** is supported at the outer end and provision is made for vertical, side, and longitudinal adjustment by means of the screws *e*, *e*, *f*, and *g*, respectively.

63. Setting the Work and Tools.—The work, which is set upon the table *h*, can be drilled and bored in

one position, then moved to another position and the operation repeated without resetting. The work is fastened on the table precisely as it is on a vertical drill, care being taken to have the center line of the hole in perfect line with the center of the spindle. It is well, also, to guard against the work slipping endwise by setting a dog, or other support, solidly against each end. The tools used in this style of drill, aside from the boring bar, are the same as those used for similar operations in the machines already considered.

POST DRILL.

64. Another form of machine that is used very largely in machine shops for work not requiring extreme accuracy is shown in Fig. 23. The driving parts are supported

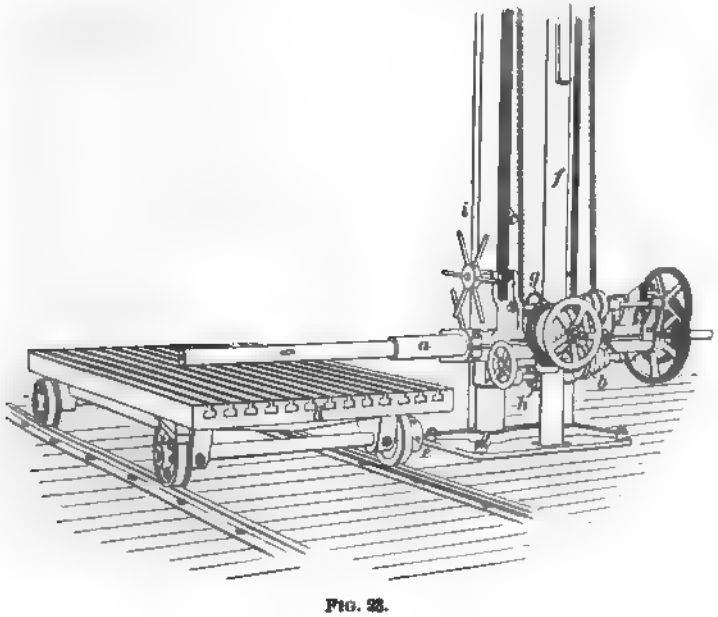

FIG. 23.

on two posts, which give this class the name of **post drill.** The spindle *a*, with the driving part *b*, may be adjusted

vertically by means of a rack *c* on the post, while the work, which is set upon a table *d* equipped with wheels and mounted upon a track, is adjusted horizontally by moving the entire carriage along the track. In the machine shown, the carriage is moved by means of a bar that fits the holes shown in the hub *e* of the wheel nearest the post. The machine is driven by means of a belt *f*, which runs over an idler *g* and a driving pulley on the spindle *a*, then over another idler *h*, down through the floor, and up again at *i*.

The essential features of the driving mechanism are the same as in horizontal boring and drilling machines, although the details are necessarily quite different.

This machine is used very largely for drilling flanges, spot facing, etc., and is especially useful on parts that are too high to be drilled in an ordinary machine tool. The posts are carried high enough to accommodate any work that can be handled in the shop, the tops being supported by means of braces carried from the side walls or ceiling.

HORIZONTAL FLOOR MILLS.

65. General Arrangement. — A type of horizontal boring, drilling, and milling machine that is used quite extensively in shops doing heavy work is illustrated in Fig. 24. The boring bar *a* and feed mechanism are carried in a head *b*, supported on a column *c*, which, in turn, rests on the bed *d*. The power is transmitted to the machine through the cone pulley and back gear at *e*, and is carried by means of shafting and gears to the boring bar. The machine is so constructed that the head may be moved vertically on the column, and the column horizontally on the bed, while the boring bar moves in and out through the head.

The work is set on a floor *h*, which is provided with T slots, as shown. The outer end of the boring bar is supported in a bearing *f* mounted on the column *g*, which rests

on the floor. The column and bearing may be moved to any location on the bed, and adjusted to any desired height.

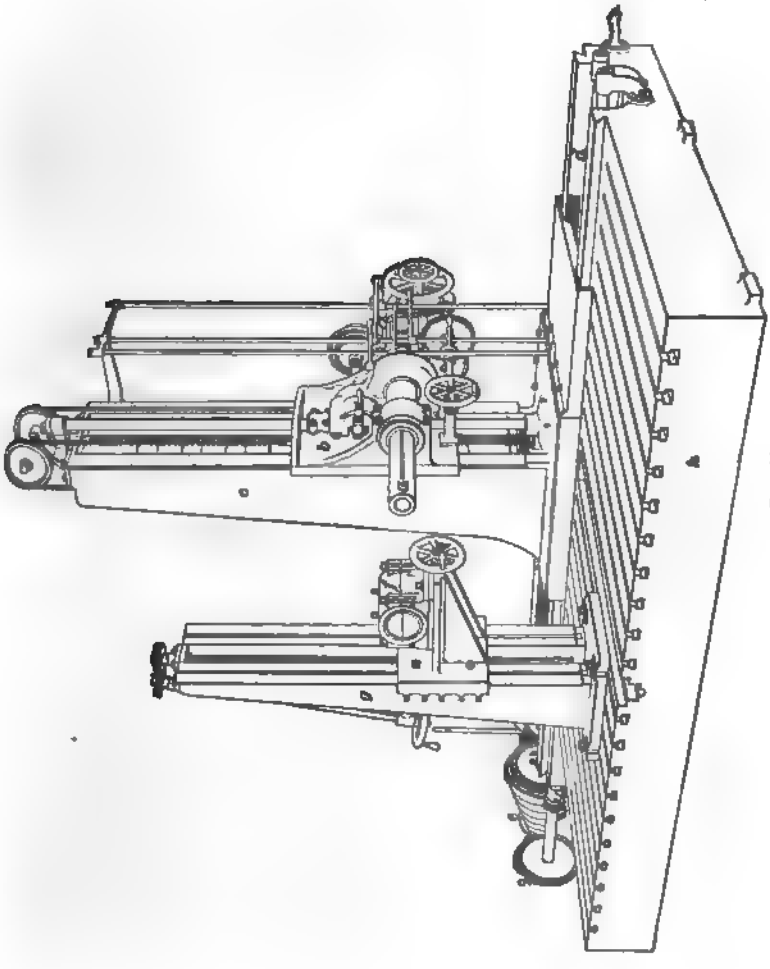

FIG. 34.

66. Floor.—The **floor** of this type of machine is sometimes made very large, so as to accommodate more than one machine. A good arrangement consists of two machines set at right angles to each other, the one being of a heavy class designed principally for boring on large

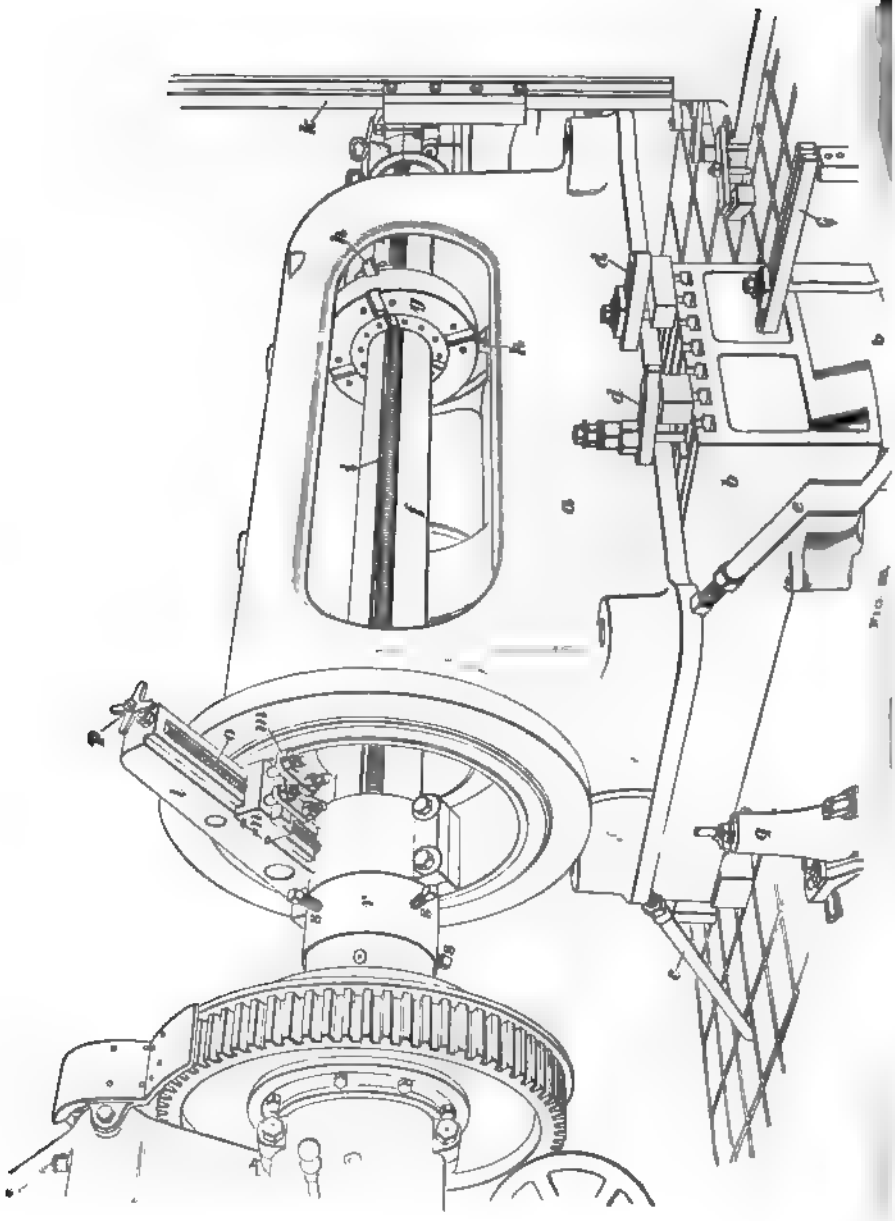

diameters, while the other is somewhat lighter and is especially adapted for drilling operations.

67. Double-Head Machine.—Machines have been designed with a heavy boring head on one side of the column and a drilling head on the other, with the driving mechanism so arranged that either one can be thrown in at will. With this arrangement, only one head can be operated at a time, and the experience of users of such a machine seems to indicate that better results are obtained by mounting the two heads on separate columns, so that both may be operated at once.

68. Setting and Fastening Work.—The same principles that have already been mentioned in connection with the securing of the work on the tables of other machines apply to this class of machine as well. It is necessary to set the work perfectly level, and to line up the center line of the proposed hole with the center line of the boring bar. Parallels and blocks, or wedges, are used to raise the work to a suitable height, and to level it up. When it is properly set, clamps are applied, as shown in Fig. 25.

69. Example of Setting Up and Fastening Work. Fig. 25 represents an engine bed set up on a large floor and being operated on by a boring bar connected with a large horizontal boring machine. The bed *a* is mounted on parallels *b*, *b* near each end of the bed, which are clamped to the floor plate by means of the clamp *c*, and the bed is clamped to the upper parallels with the clamps *d*, *d*. A pair of pipe jacks *e*, *e* running out from the corners, as shown, guard against both side and end motion. A duplicate set of parallels, clamps, and jacks, at the other end, which is not shown, hold the bed rigidly in place.

70. Arrangement of Boring Bar and Cutter.—The illustration shows the boring bar *f*, the boring head *g* with two tools *h*, *h* in position, the traversing screw *i*, the outer bearing *j* with the front of its supporting column *k*, the facing head *l* with the tool *m* clamped on the tool slide *n*,

the feed-screw *o*, the star *p*, and the star feed-post *q*, the last being bolted to the floor.

The boring bar is connected to the spindle by means of a special socket *r*. One end of the socket fits the spindle and the other end is bored out to receive the boring bar, which is gripped and held central by means of four setscrews *s*. The illustration shows a typical piece of work for this class of machine, and the usual method of supporting and holding it.

MILLING OPERATIONS IN BORING MILLS.

71. The milling done in horizontal boring machines is similar to that done in the heavier types of milling machines. Solid cutters are used for the smaller work, and large inserted-tooth cutters, resembling the heads used on rotary planers, are usually employed in facing large surfaces. The horizontal boring machine is especially well adapted for facing irregular surfaces, the horizontal and vertical feeds being so arranged that either one or both may be thrown in at the same time, thus permitting any path within the range of the machine to be followed.

CYLINDER BORING.

72. Setting Up Work. — Engine, pump, or other cylinders in which a reciprocating piston must operate, should always be bored in the position in which they are to be used. The cylinder of a vertical engine should be bored standing on its end, while the cylinder of a horizontal engine should be bored in a horizontal position. In large cylinders, especially, there is considerable spring due to their weight, which will tend to produce an oval shape when a cylinder that has been bored in a vertical position is laid on its side, or when a cylinder bored in a horizontal position is set on end. When the boring is done in its working position, this difficulty is practically eliminated.

73. Tools for Finishing Cut. — The working surface should be very carefully bored in order that there may be no unevenness or irregularities of any sort. There is some difference of opinion, however, as to the best course to pursue to attain this end. Some claim that the finishing cut should be taken with a square-nosed tool in order that the surface may be perfectly smooth, while others prefer a rounded diamond point, claiming that the narrow point is less affected by unevenness in the structure of the metal, and that the slight ridges formed tend to reduce the amount of metal in actual contact, and are an advantage rather than a detriment. The ridges also tend to draw the oil under the piston, thus affording better lubricating conditions.

74. Continuous Travel on Finishing Cut. — All shop men agree that whatever tool is used for the finishing cut, it should run continuously from one end of the cylinder to the other. The heating due to the action of the tool causes enough expansion that even a short stop will leave a noticeable ridge, and long stops often make it necessary to bore the whole length over again. For this reason, cylinder-boring machines should be run by an independent engine or other motor.

75. Machines Employed in Cylinder Boring. — Cylinders are bored in lathes, vertical and horizontal boring mills, or special machines built for that purpose, depending on the amount of this class of work that is to be done. Except in shops where a specialty is made of one or more types of machines, either a lathe or an ordinary vertical or horizontal boring mill is used.

CORLISS ENGINE CYLINDER-BORING MACHINE.

76. A machine for boring large **Corliss engine cylinders** is shown in Fig. 26. Two adjustable boring bars *a* and *b*, standing at right angles to the main spindle *c*, are provided for boring the ports, while the main spindle *c* bores the cylinder proper. An outboard

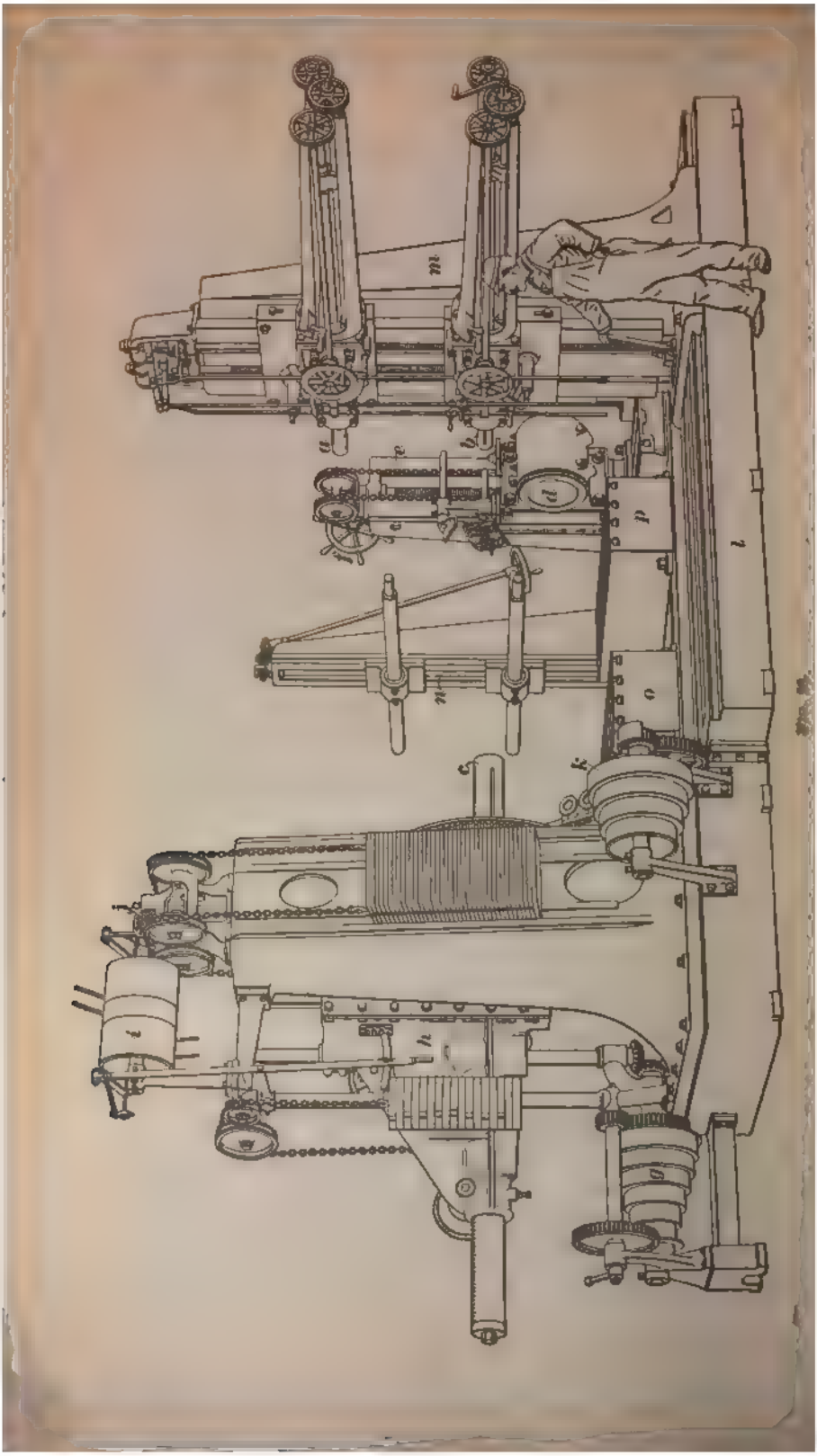

bearing *d* for the main boring bar, which is mounted on a vertical slide on the column *c*, is raised and lowered to suit the spindle by means of the wheel *f*. The main spindle is driven through the cone and back gear at *g*, while the main head *h* is raised and lowered by means of a belt running on the pulleys *i*, which connect with the head by means of a vertical shaft through a worm and worm-gear at *j*. The small heads and boring bars *a* and *b* are operated through the cone and gearing at *k* and shafting and gears in the bed *l* and column *m*. The column *n*, with its bearings, forms an outer support for the two boring bars *a* and *b*. The cylinder is supported on the parallels *o* and *p*.

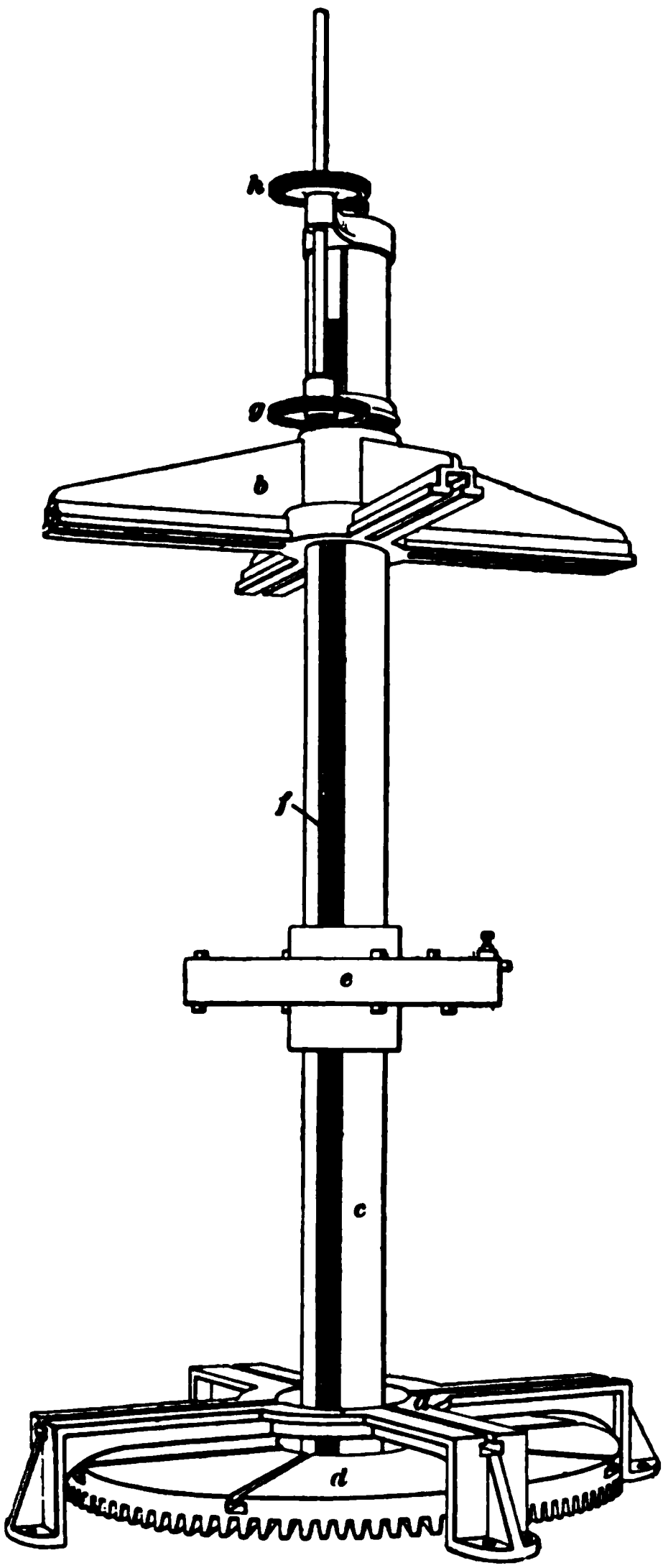

FIG. 27.

VERTICAL CYLINDER-BORING MACHINE.

77. In shops having a large amount of vertical cylinder boring to be done, special machines are sometimes employed;

these machines are so constructed that the cylinder stands on a heavy floor plate, to which it is clamped. The boring is done by a vertical bar, the upper end of which, together with the driving mechanism, is carried by heavy columns. These machines are sometimes so constructed that the bar and a portion of the driving mechanism may be lifted out of the way while the cylinder is being placed in the machine. Such heavy machines are usually run by an independent engine or other motor.

VERTICAL BORING BAR.

78. In shops where the amount of work does not warrant the purchase of an expensive machine, a vertical boring bar, like the one shown in Fig. 27, may be used. The cylinder is supported on the stand *a*, and is clamped between it and the four-arm bracket *b* at the top, which also forms the guide for the boring bar *c*. The bar is rotated by means of a large bevel gear *d* and a bevel pinion (not shown) that connects with a pulley from which the machine receives its power. The cutter head *e* is fed by means of the ordinary feed-screw *f* and the reduction gearing *g* and *h* shown at the top of the bar.

BORING SPHERICAL BEARINGS.

79. The boring of internal spherical surfaces is accomplished by means of a revolving boring bar that carries a tool on an arm that moves in an arc about a point in the center of the bar, the axis of rotation of the arm intersecting the center line of the bar at right angles.

80. Special Boring Bar.—Fig. 28 illustrates a device designed for this purpose. A boring bar *a* has a double-end arm *b b* pivoted on the axis *c*, which stands at right angles to the center line of the bar. The arm *b b* carries on its outer ends two tools *d*, *d*, set in and clamped as shown.

It will be seen that if the arm *b* is turned about its axis *c*

while the bar *a* is rotating, the tool points will bore an internal spherical surface. In order to secure this motion, the arm is constructed with the segment of a worm-gear *e* on one side. A worm *f* engages with this worm-gear, so that when the worm is rotated, the arm swings about the center *c*, causing the tool points to travel in an arc about the same center. The worm *f* is revolved by a star *g* through the gears *h* and *i*. A post on the floor operates the

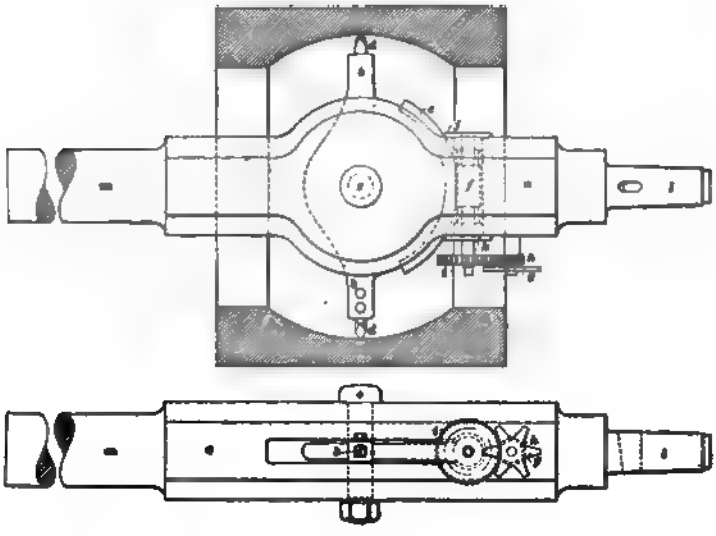

FIG. 28.

star in the usual way. The worm *f* is supported in two flanged bushings *j* and *k*, while the arm *b* is pivoted on a through bolt. The end *l* of the boring bar is made to fit the spindle of a large horizontal boring mill in which it is used, while the end *m* fits the outer bearing. Narrow round-nosed tools are usually employed with a fine feed, so as to form a smooth surface. For the roughing cuts, the two tools may be used, but for the finishing cut, it is best to use one tool only.

81. Portable Boring Devices.—When the amount of spherical boring to be done does not warrant the

construction of a bar as illustrated in Fig. 28, or in cases where a portable arrangement is necessary, a boring bar may be fitted up as shown in Fig. 29. An ordinary boring bar *a*, with its feed-screw and gearing *b* and *c*, and boring head *d*, is fitted up with a forked arm *e*, which is pivoted on both sides of the bar, so that the axis of rotation of the arm and the center line of the bar intersect at right angles.

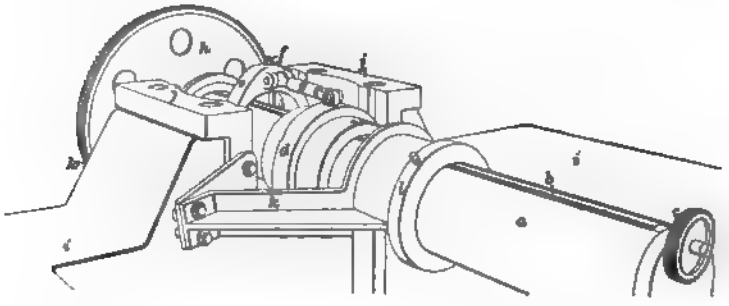

FIG. 29.

The arm *e* carries a tool *f* and is connected with the head *d* by the link *g*. The boring bar is rotated by means of the worm-gear *h* and a worm and pulley that are not shown. As the screw *b* is rotated, the head *d* is moved along the bar, and the link *g* causes the arm *e* to swing about its axis, and, when both bar and screw are rotated, the tool will form the desired spherical surface.

The illustration shows the bar mounted on a large engine bed *i i*, ready to bore the spherical bearing *j j*. The bar is supported on two brackets *k*, *k* bolted to the ends of the bearings, and is kept from moving endwise by means of the worm-gear *h* on one end and the collar *l* on the other end.

DRILLING AND BORING.

(PART 8.)

DRILLING-MACHINE OPERATIONS.

DRILLING.

1. Laying Out.—In many modern machine shops, the **laying out** of all the work is done in a special department and the work is sent to the machine tools ready for the operation. For the drilling machine, the center of the required hole is marked; a circle equal to the diameter is scribed about it and light prick-punch marks put at the center and at intervals about the circumference, as shown in Fig. 1. The diameter and character of the hole are also marked, usually with chalk. The marks on Fig. 1 indicate that a 1½-inch reamed hole is required.

FIG. 1.

2. Enlarging the Center Mark.—When the work reaches the drill, the operator enlarges the center *a* with a large center punch, to form a guide for the drill point when beginning the cut. It is practically impossible to start the drill in the center of the hole without the assistance of this deep center mark.

Copyright, 1901, by THE COLLIERY ENGINEER COMPANY.
Entered at Stationers' Hall, London.
All rights reserved.

3. Adjusting the Work and Table.—The piece is now ready for the drill, and is mounted and clamped on the table as already explained. The drill table is then swung about and adjusted until the center mark stands immediately under the drill point, the drill having, in the meantime, been run down to make sure that the point coincides with the center. The table is then clamped to prevent any motion while drilling, the machine started, and the drill fed into the work.

4. Starting the Drill.—When the drill has commenced cutting, any unevenness, or varying hardness of the metal, or imperfection in the drill point, tends to carry the point away from the true center of the hole. As the drill runs down, making a conical hole as shown in Fig. 2, any tendency away from the center may be observed by raising the drill point slightly and blowing or brushing away the chips. If the outer circle made by the drill is not concentric with the circle of punch marks, the drill has run off from the desired center, and must be brought back. A drawing chisel, shown in Fig. 3, is used for this purpose. This is simply a narrow round-nosed chisel with which the metal is cut away on the side toward which the drill point is to be drawn, as shown in Fig. 4. The cutting should be done quite near the center, as a given amount of metal removed there will draw the drill farther than when the cutting is done near the circumference.

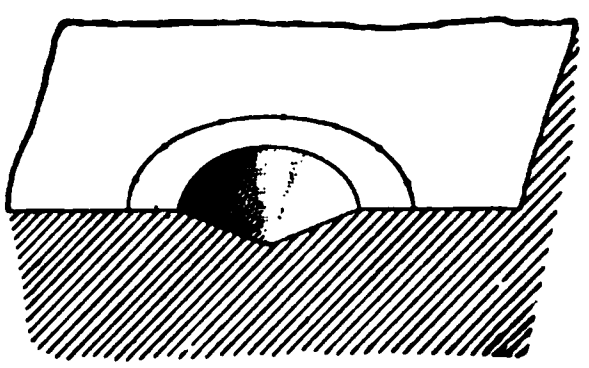

FIG. 2.

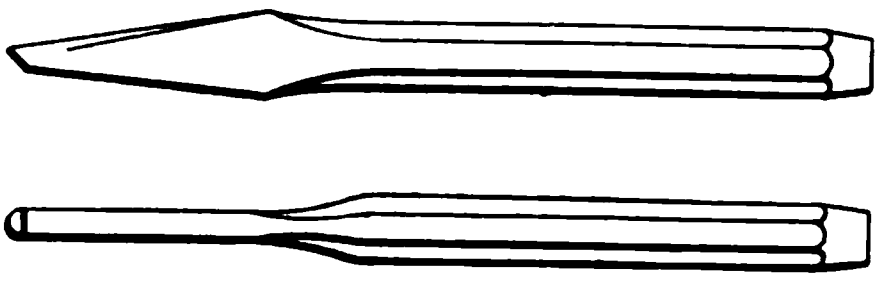

FIG. 3.

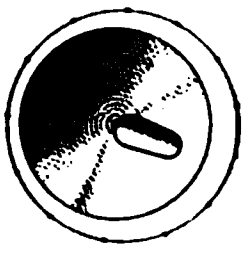

FIG. 4.

The drill is again lowered and the result observed. If the circle should not be concentric, the chisel is again used and the drill tried; this operation is repeated until the hole coincides exactly

with the circle when the drill has entered to its full diameter. The punch marks are cut away equally all around the circumference when the drill has been properly started. The drill is then fed through the piece, or to the desired depth, either by hand or by power, and when the cut is finished, it is backed out by hand.

5. Advantages of Power Feed.—All drill presses of the heavier types should be so constructed that either hand or power feed may be used at will. In light work, enough pressure can be furnished by hand to cause the drill to cut to its full capacity, but in the heavier work a greater pressure is needed. It is contended by some that the average workman will accomplish more by feeding by hand than by using a power feed, since the tendency seems to be to set the feed at its finest rate, although most drill presses are provided with gearing that will furnish two or more rates. This is the fault of the operator and not of the method. The power feed should be so set that the drill will work up to its limit, which it is impossible to accomplish with a hand feed when large drills are used.

The power feed has several advantages over the hand feed for all sizes of drills. With a hand feed, the drill will leap forwards as the point emerges from the material, often causing a rough hole and injury to the drill. The same is true when it enters a blow hole. In drilling flanges, the drill frequently breaks through on one side, and, when the cutting edges stand at a certain angle, the drill runs forwards easily and the next instant takes a heavy cut on one side only. It is evident that this condition will sooner or later result in an injured drill. With the power feed, all this is avoided, as the drill has a fixed rate of advance. In using the power feed, care must be taken to see that the drill is in proper working condition.

6. Lead Holes.—In using large drills, time may be saved by drilling a small hole at the center for the entire depth of the hole, the diameter of this small hole being made at least equal to the length of the scraping edge at the point

of the large drill. The small center hole is called a **lead hole.** This hole will permit all the pressure to come on the cutting edges proper, and all the power is applied directly to removing the metal. The drill will thus cut more rapidly than it will when required to remove the metal from before its center.

FIG. 5.

When the large drill runs out of center at the start, it is necessary to draw it over with a drawing chisel. In this case, a groove running the full length of the conical surface should be cut as shown in Fig. 5.

7. Drilling Deep Holes. — In drilling deep holes through a piece of work, it may be necessary to go deeper than the length of the flutes in the drill of the required size. If the hole is not too deep, the drill may be backed out and the hole cleaned at short intervals. When the hole is very deep, however, time may be saved by running the drill down as far as the chips will discharge, then drilling the remaining depth with a smaller drill, making a hole as shown in Fig. 6. The first drill is then put back into the machine and the entire hole drilled to the full size.

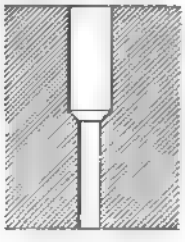

FIG. 6.

The second drill must be small enough so that the chips can work out around it, but must not be so small that the chips made by the larger drill that follows it cannot drop out freely at the bottom. In one instance, where a $1\frac{1}{16}$-inch hole was drilled through 26 inches of solid cast iron, a $1\frac{1}{4}$-inch drill was employed to drill the small hole and gave good results.

REAMING.

8. Methods of Reaming.—It has already been stated that **reaming** consists of truing up a hole by means of a reamer. The hole has been previously drilled or bored, and,

as it is a matter of economy to do as much work as possible at the same setting, the reaming is often done in the same machine that was used for the drilling or boring. The roughing reamer is usually made with a shank that can be used in a drill press, and is run at a slow speed and fed carefully by hand. For very accurate work, the reamer should be operated by hand, but may be guided by a center in the drill spindle, as shown in Fig. 7. The reamer *a* is turned with a wrench and is followed up by the center *b*, which also furnishes the necessary pressure.

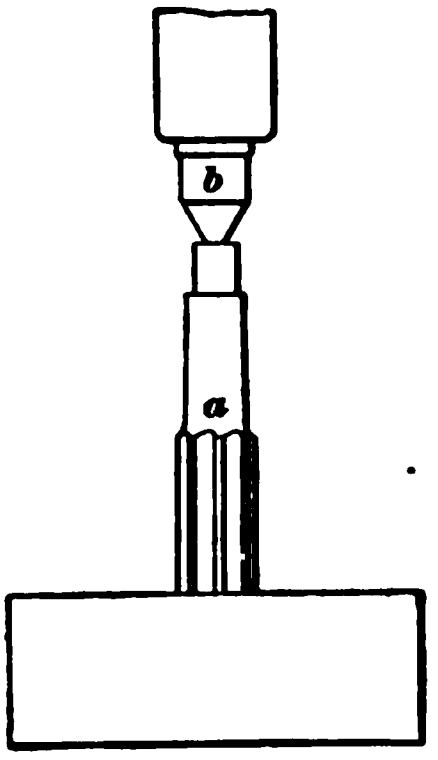

FIG. 7.

9. Care Necessary in Reaming.—Reaming should be done with the greatest care. Undue forcing of the reamer, any side pressure, or any irregular or jerking motion, tends to injure both the reamer and the hole. A very steady and comparatively slow motion under a light pressure gives the best results. In some cases, the weight of the reamer and the wrench is sufficient to furnish the feed, although some additional pressure is usually necessary.

10. Machine Reaming.—In cases where a large number of holes are to be reamed, it is done with one reamer, operated by a drill press and fed with the power feed. This should, however, be done only in cases where there is enough work of this kind to enable the operator to know exactly what speed and feed to use, and to set his machine properly. The holes, too, must be drilled very carefully, in order that there may be no great variation in the duty of the reamer.

TAPPING.

11. Forms of Taps Used.—The forms of taps used in the drilling machine are the same as those used in the lathe, except that in the former the shank is usually made

with a standard taper or other form adapted for drill chucks or sockets, while in the lathe the square-end tap is used. The devices for holding taps in the drilling machines are explained in Arts. **87** and **88,** *Drilling and Boring*, Part 1.

In ordinary machine tapping, a taper tap gives the best results. When the thread runs through the material, the tap is run either entirely through or until a thread of the full diameter is formed. When the hole does not run through and the thread must run as near the bottom as possible, the taper tap is used to start the thread, and is followed by a plug and bottoming tap.

12. Speed of Spindle.—As in reaming, the speed of the spindle must be slow, and, after the tap is started, no pressure should be put upon it by the feeding device. The tap should be perfectly free to take its own feed.

13. Correct Size of Drilled Hole. — It is a very important matter in tapping that the hole should be so drilled that a full thread will be formed without removing an excessive amount of metal. When the hole is drilled too small, it is very hard to start the tap, and, when it is started, the work is so heavy that the tap is frequently injured, while the amount of time and energy required is far greater than is necessary.

It is claimed by some, however, that the hole should be drilled larger for cast iron than for wrought iron and steel, and that a thread about three-quarters full in the case of cast iron is stronger than a full thread, owing to the danger of crushing the points of the thread and perhaps injuring the tap in case a full thread is attempted.

A hole that is too large is equally objectionable, as the threads will not be of the full depth, and will, therefore, be imperfect and weak. The tap runs very easily, however, when the hole is large, and for this reason there is a tendency toward making it large, even at some sacrifice in the strength of the thread. This should, however, never

be permitted, as the perfect form of the thread should be maintained under all conditions. Tables V and VI, Art. **47**, give the sizes of drills to be used for taps of various sizes.

COUNTERSINKING, COUNTERBORING, FACING, AND CENTER DRILLING.

14. Countersinking, counterboring, and **facing** are carried on very much as ordinary drilling. The tool is inserted in the drill socket, the hole brought central with the spindle, and the tool is fed down to the desired depth. The speed should, however, be reduced to a suitable point for the outside diameter of the cutting edges of the tool used. **Center drilling** is fully considered in Art. **23**, *Lathe Work*, Part 1, and Art. **29**, *Drilling and Boring*, Part 2.

LUBRICATING.

15. The subject of **lubrication** of drills has already been considered in Arts. **40** to **42**, *Drilling and Boring*, Part 1. The same conditions with regard to lubrication that have been mentioned exist in the use of countersinks, counterbores, facing tools, and center drills. In working cast iron and brass with these tools, no lubrication is necessary; in fact, it retards the work in the case of cast iron. Wrought iron and steel, however, always require lubrication. In reaming and tapping, some form of lubricant should be used with all metals.

Usually, the lubricant is dropped on the cutting edges with an ordinary oil can, but in multiple-spindle machines, and occasionally in single-spindle machines, a tank, with a tube leading to the tool, is attached to the machine frame. The flow is controlled by means of a valve in the tube. A small pump carries the lubricant from the table of the machine back to the tank, thus providing a means of using the same lubricant over and over again, and of flooding the cutting edges without undue waste of the lubricating material.

DRILL GRINDING.

16. Form of Drill Point.—The form of **drill point** that will give the best results has already been considered in *Drilling and Boring*, Part 1. It is very important that this form shall be maintained whenever the drill is ground. The drill point should always be perfectly symmetrical, and when cutting, should produce similar cuttings on each side.

17. Hand Grinding.—To grind a drill by hand so that the above conditions may be fulfilled requires the greatest skill and care. **Hand grinding** is usually done by holding the tool on the grinder without any gauge, and depending only on the eye for the correct cutting and clearance angles. Sometimes a flat drill is tested by pressing the one cutting edge against a smooth piece of wood, while holding the drill in a certain position, then turning it and pressing the other edge on the same mark, still maintaining the same position of the shank. If the two marks coincide, the drill is supposed to be well ground. The accuracy of this test depends entirely on the skill of the workman, but remarkably good results are often obtained in this way.

18. Measuring the Cutting and Clearance Angles of Twist Drills.—The test given above is not a very sure one, and it is better in the case of a twist drill to use a gauge, or a protractor, set at the required angle, as shown in Fig. 8 (*a*). By turning the drill so as to bring the protractor from *a* to *b*, the clearance angle may be observed, and in this way the two sides may be compared.

Another method often used is illustrated in Fig. 8 (*b*). The point of the drill is set on a plane surface or on a straightedge, and a scale held against its side, as shown. The heights of the corners *a* from the point are thus measured. If the two sides are alike, the drill is turned, and the heights of the corners *b* are measured, thereby determining whether the clearance angles are equal. The scale is then

laid along the cutting edges, and if all three corresponding measurements agree on both sides, the point is symmetrical.

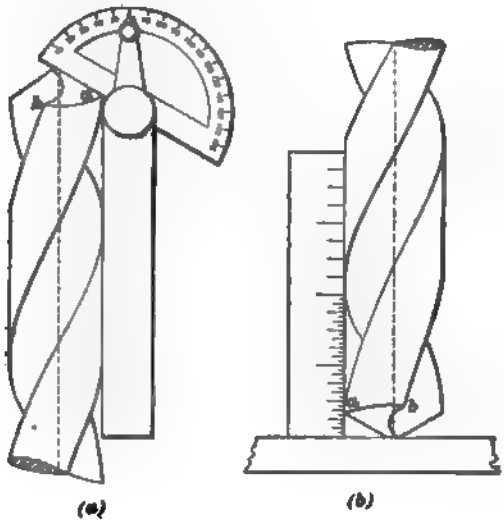

FIG. 8.

19. Angle and Length of Scraping Edge.—The clearance angle determines the angle of the line *a b*, Fig. 9 (*a*), in which the planes of the clearance faces intersect. This illustration shows about the correct angle. When the angle is too small, as in Fig. 9 (*b*), or too great, as in Fig. 9 (*c*), the drill will not work well.

FIG. 9.

In order to give strength to the drill, the center is made thicker as it approaches the shank, and it is obvious that as the cutting edges are ground back, the length of the line *a b*, Fig. 9 (*a*), increases. When this increase becomes objectionable, the flutes should be ground out until the point is

reduced to its original thickness. In this operation, care must be taken not to change the shape of the flute.

20. Machine Grinding.—As may be expected from the methods employed, hand grinding is generally not satisfactory, and machines that obviate the difficulties met with in hand grinding have been brought into very general use. The machine shown in Fig. 10 may be taken as a fair representative of twist-drill grinding machines.

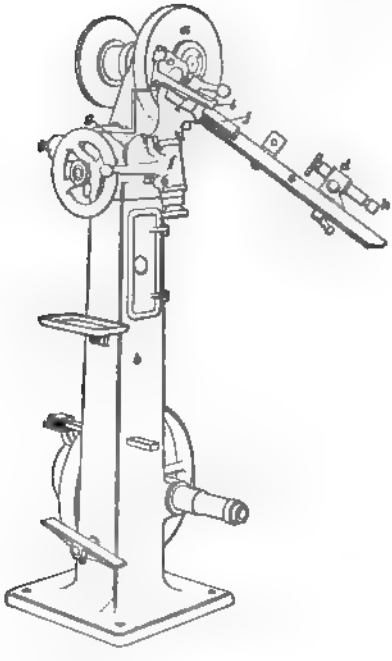

FIG 10.

21. Twist-Drill Grinding Machine.—The grinding wheel *a*, which is rotated by means of a belt, is supported on a column *b* at a convenient height from the floor. The drill is held on two V-shaped supports *c*, *c* and an end rest *d*, all of which are held on an arm *e*, which is supported in a bearing *f*, about whose axis the arm *e* is free to swing. The bearing *f* is supported on the end of the arm *g* and may be moved nearer or farther away from the wheel *a* by sliding the arm endwise in its bearing, while it may be clamped at any position.

22. Grinding Twist Drills.—To grind the drill, it is laid on the V's *c*, *c* and the end rest *d* is adjusted to hold the drill near the wheel. The lip of the drill is laid against a gauge that is hidden behind the upper V, and the arm *e* is rotated about the axis *f*. The drill is fed slowly toward the wheel by turning the screw *h* until the drill is ground to the desired edge.

23. Form of Clearance Face. — It is evident from this construction that the metal back of the cutting edge will be ground away in the form of an arc of a circle, and not in a plane surface as in hand grinding. This has been thought objectionable, but the use of these machines has demonstrated that if the radius is properly adjusted for each size of drill, the arc immediately back of the cutting edge will be so flat, and will approximate so closely to a plane, that the supporting edge is practically not weakened. As the arc runs farther away from the cutting edge, it, of course, deviates more from the true clearance angle, but before any deviation is noticeable, the arc has run so far back that the support of the cutting edges is not affected.

24. Length of Radius.—The length of the radius is adjusted by moving the arm *g* in or out of the bearing, the position being determined by a very ingenious little device shown at *i*. In order to make the adjustment for the drill, the arm *g* is loosened and drawn out a short distance. The upper V, *c*, is then loosened and moved up until the opening between the projection *i* and the projection *j* on the arm *c* just permits the drill to pass through. The V is clamped in that position, and the arm *g* is again moved in until the lip gauge, already mentioned, just clears the wheel. The end rest *d* is then set to the proper position, and the drill laid on the V's and ground, as explained above.

These adjustments can be made with very little loss of time, and a perfectly symmetrical drill point is assured. It is claimed that a machine of this type will grind drills ranging from $\frac{1}{8}$ inch to $2\frac{1}{2}$ inches in diameter.

DRILLING AND BORING JIGS AND FIXTURES.

DRILLING JIGS.

25. Drilling Duplicate Pieces. — Duplicate pieces may be drilled by the use of **drilling jigs.** A drilling jig is a device or fixture that may be temporarily attached to the work, and acts as a guide for the drill in any desired

position. The guiding of the drill is accomplished by means of steel bushings placed over the positions of the required holes. It is obvious that in this way a large amount of time otherwise devoted to laying out may be saved, and, when the jig is well made, a degree of accuracy may be attained that is impossible by any other means. The economy of such a device depends on the number of pieces to be drilled and the cost of the jig.

26. Construction of Jig. — The body of the jig is usually made of cast iron, but, in order to prevent undue wear of the holes, hardened-steel bushings *d*, Fig. 13, which fit both the jig and the drill snugly, are inserted. These bushings are generally made with a shoulder, as shown in Fig. 11, and with the inner corner slightly rounded, to avoid injury to the drill when entering. Jigs are frequently used from both sides, the bushings being set as shown in Fig. 12, and the inside corners being rounded on both ends.

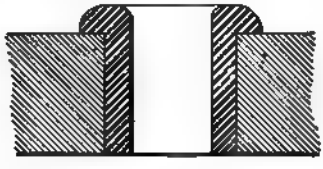

FIG. 11.

In drilling two adjacent parts, as, for instance, the flange and head of a cylinder, the head may be drilled first, and may then be used as a jig for drilling the cylinder, or as a templet for marking the holes. When a large number of duplicates are to be made, however, it is better to use a jig for both the cylinder and head.

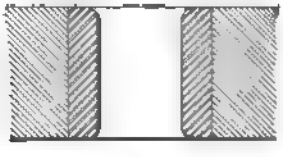

FIG. 12.

27. Jig for Drilling Flanges With Regularly Spaced Holes. — Fig. 13 illustrates a flange *a* and a jig *b* of the form that is very generally used for this class of work. A lip *c* on the circumference fits the

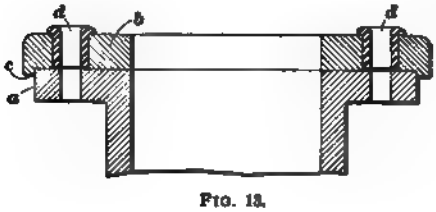

FIG. 13.

flange and holds the jig central. When in the desired position, a clamp is applied to keep the jig in place while the drilling is being done. When the holes are equally spaced on the same circle, and the adjoining flange or head is of the same diameter, it may be drilled with the same jig, thus insuring a continuous hole when the two parts are put together.

28. Jig for Drilling Flanges With Irregularly Spaced Holes.—When the holes are not regularly spaced, it is evident that they cannot be drilled by turning the jig over, as suggested in Art. **27**; consequently, it is necessary to make the jig with a lip on each side and with bushings set in, as shown in Fig. **14**, so that each side of the jig will fit one of the adjacent flanges. It is evident that when the flange *a* is

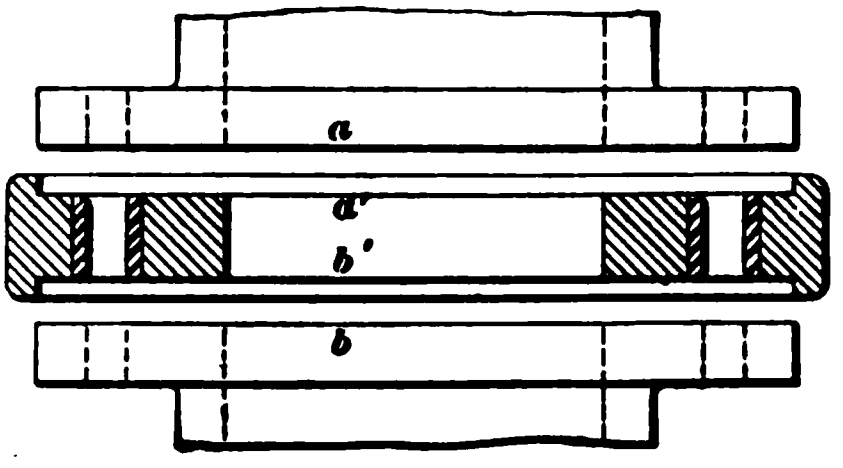

FIG. 14.

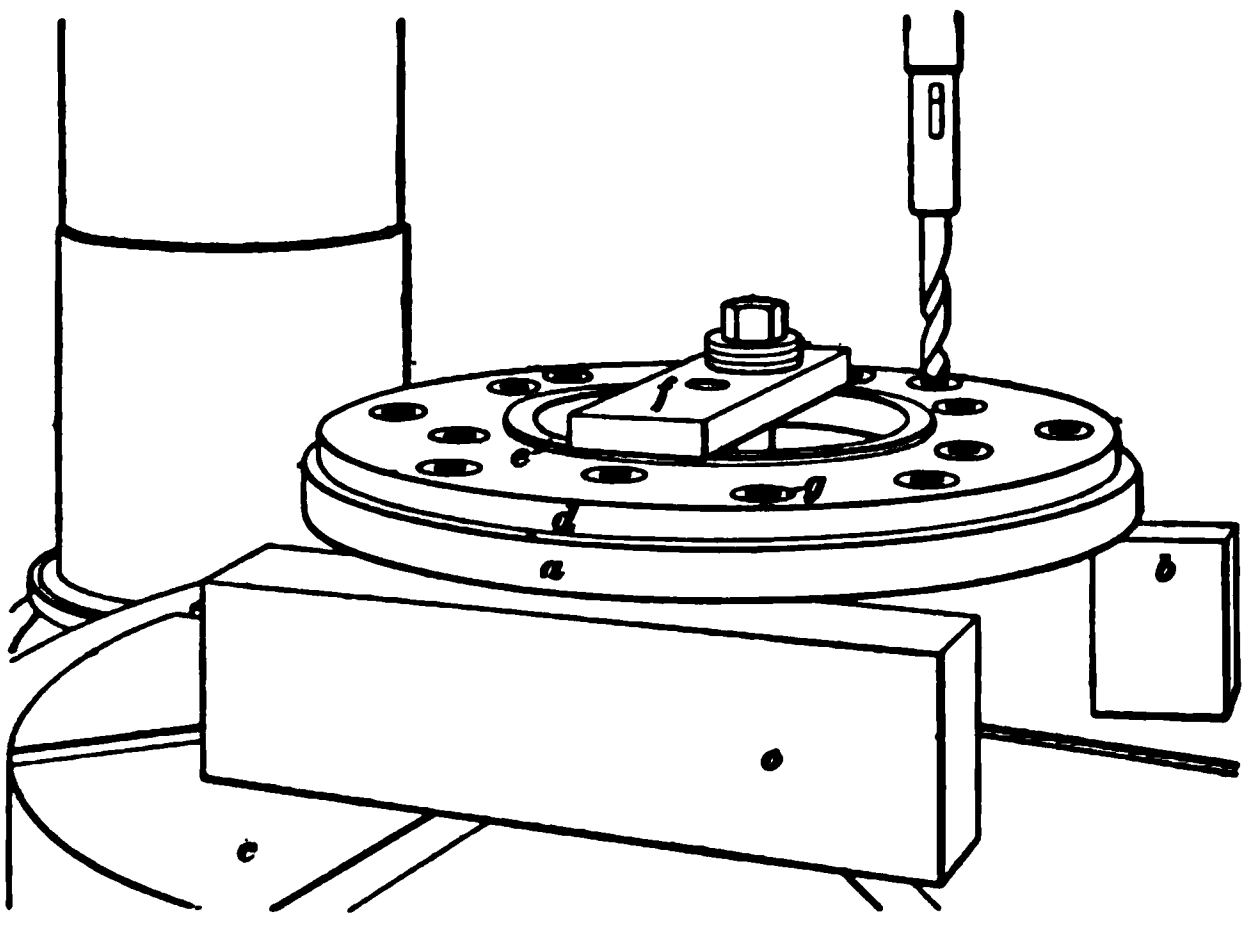

FIG. 15.

drilled with the side *a'* of the jig against it, and the flange *b*

with the side *b'* against it, the holes in the two flanges will meet perfectly, however irregularly they may be located.

29. Example of Drilling With Jig.—Fig. 15 shows, mounted on a drilling-machine table, a jig for drilling the hub and hub plate of a locomotive wheel, in which the holes are not regularly spaced. The plate *a* is supported on parallels *b* resting on the table *c*. The jig *d* has a lip *e* on each side, to fit the bores of both the plate and the wheel. The set-in bushings are shown at *g*. A single clamp *f* holds both jig and plate in place.

30. Outside and Inside Jig.—Fig. 16 (*a*) shows a jig used in drilling two parts, one of which has a projection *a* which must fit into a bored hole *b* on the other. The jig is

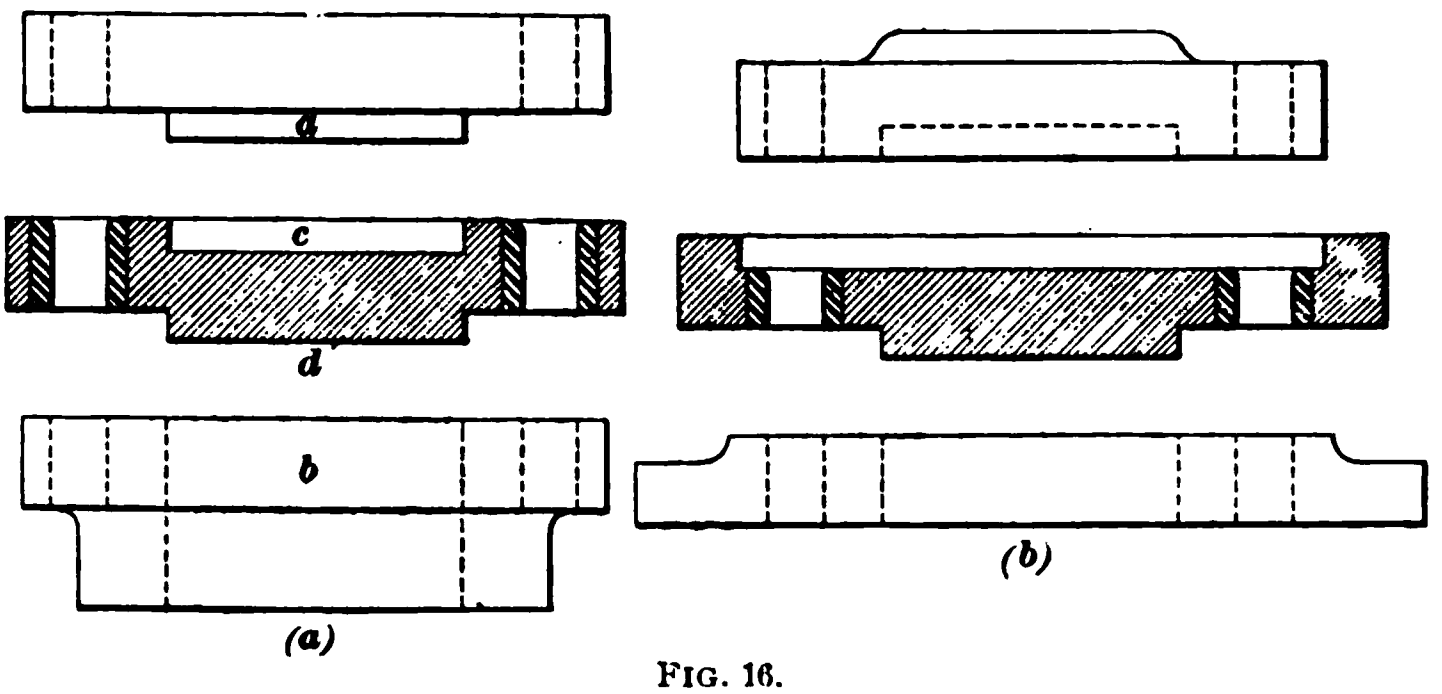

FIG. 16.

made with a counterbore *c* on one side, which will fit the projection *a*, and a projection *d* on the other side to fit the bore *b*. This same arrangement may be used in drilling parts of different sizes, as, for instance, a manhole and its cover, as shown in Fig. 16 (*b*).

31. Jigs for Irregular Surfaces.—The jigs shown thus far are intended for circular pieces, but the principle involved may be applied to pieces of any form, with either regular or irregular surfaces. Fig. 17 shows a right-hand and left-hand jig used in drilling parts of the saddles of a vertical boring mill. One of the pieces is shown at *a*, and a number of them are piled up at *b*. Two of these pieces—

one a right-hand *c* and one a left-hand *d*—are bolted on the floor plate of a radial drill, with the jigs in place ready for drilling. All the holes in the two pieces are drilled without moving either piece. The upper surface of the

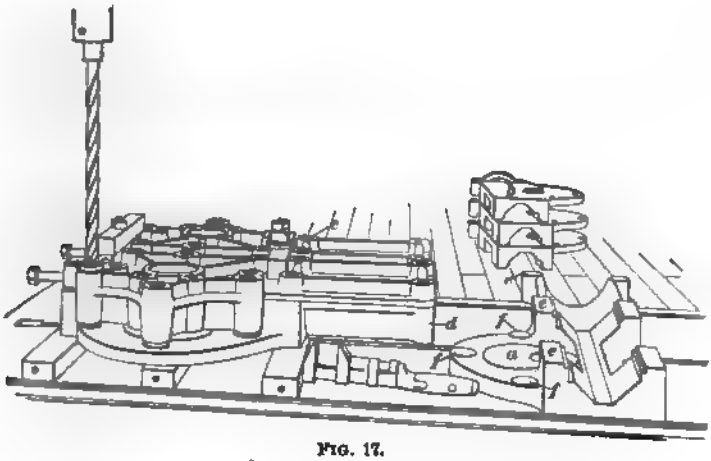

FIG. 17.

saddle being uneven, several holes are required on the level *e*, and others on the level *f*. The illustration shows how the jig is formed to fit the uneven surfaces.

For holes that are to be reamed, two bushings are provided, one for the drill and the other for the reamer. The drilling bushing is made smaller than that for the reamer, the difference in their diameters being equal to the allowance for reaming.

BORING FIXTURES.

32. Fixture for Boring Duplex Pump Cylinders. Fig. 18 shows a fixture that produces practically the same result as a jig. Although it does not form a positive guide for the boring tool, it so holds the work as to properly locate the holes. It is a device for holding a pair of pump cylinders while they are being bored in a double-head machine, which is also double-ended, boring the four cylinders at the same time. The cutters at the two ends of the machine

rotate in opposite directions, thus lessening the tendency to move. In Fig. 18 *a* shows the device empty, while *b* shows a pair of cylinders mounted in the machine. The cylinders rest on a pair of cross-bars *c*, *c* supported on four adjusting screws. The end adjustment is made by means of a screw *d* at each end, only one of which is seen, while the side adjustment is made by means of the four screws *e*, *e*, *e*, *e*. The fixture is set on the table, as shown, the two tongues *f*, *f*

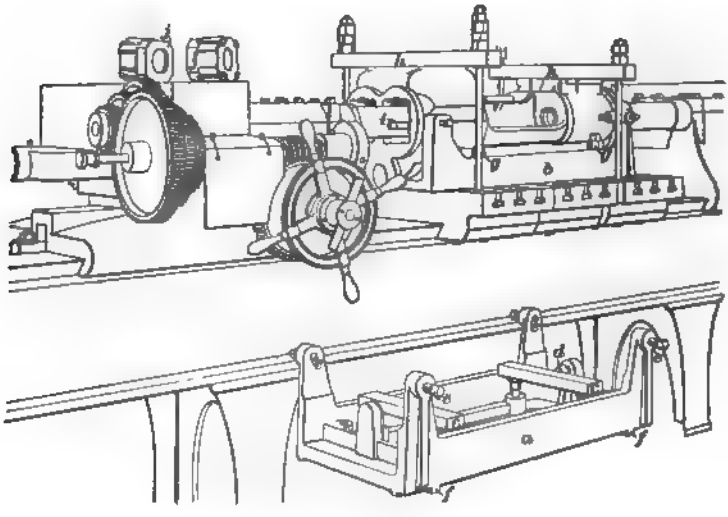

FIG. 18.

fitting into corresponding slots, to prevent any slipping and to insure perfect alinement on the table. The fixture is clamped on the table by means of the bolts *g*, *g*. When the cylinders are in place, and the adjusting screws are set up tightly, the cylinders are held securely by means of the clamps *h*, *h*. The illustration shows a roughing cutter *i* just entering the cylinder and a pair of finishing cutters *j*, *j* lying on the top of the machine.

33. Special Boring Fixture.—Fig. 19 illustrates a special fixture for boring the connecting-rod-pin hole of a gas-engine piston. The piston *a* is held between the two V-shaped castings *b* and *c*. The one casting *c* is bolted firmly

against the side of the rest, as shown, while the other casting *b* is loose. The piston is placed between the V's, as shown, and when set in its correct position, *b* is drawn up against it by the two end bolts *d*, and the clamping bolts *e* are tightened. The boring bar *f* is then passed through the

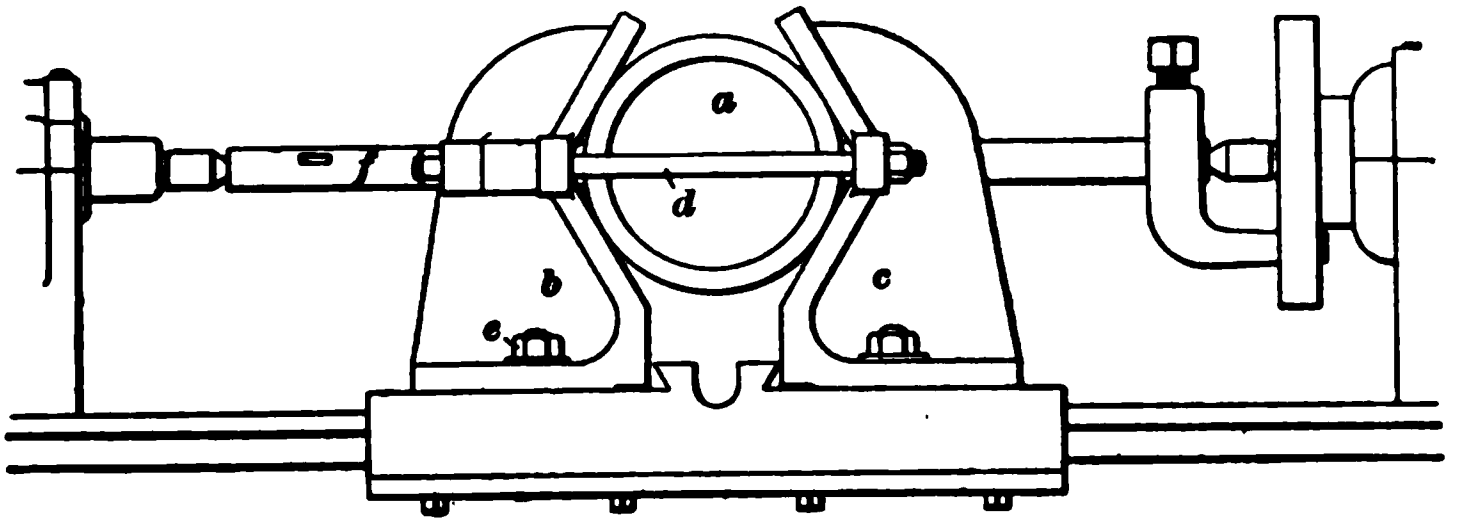

FIG. 19.

V's and the piston, and the holes are bored in the usual way. This arrangement insures a hole that is perfectly central and square with the piston. For larger pistons, a single V is used in a larger lathe, the piston being simply clamped against it. A fixture like this can be employed on either a lathe or a boring mill.

DRILLING AND BORING LOCOMOTIVE CONNECTING-RODS.

34. In drilling and boring the ends of locomotive connecting-rods and similar work, a machine with two heads supported on a common cross-rail, so that the spindles may be set at any position along the cross-rail, is frequently employed.

Fig. 20 shows the table of such a machine with a parallel rod *a* fastened upon it. In the illustration, the one spindle is fitted with a drill *b* to form a guide hole for the pin *f* of the annular cutter, while the other spindle is equipped with an annular cutter *c*, as described in Art. **36**, *Drilling and Boring*, Part 1, with two tools *e*, *e* to remove the body of

the metal from the hole, the hole having previously been formed for the center pin *f*. The hole formed by the annular cutter is finished with the reamer *d*, which is of the inserted-tooth type. The holes in the reamer are made simply to reduce the weight. The piece is held on the table by means of two clamps *g* and *h*, the end *i* being laid flat on the surface and the end *j* resting on a parallel *k*, which is equal in thickness to the vertical distance between the two lower faces.

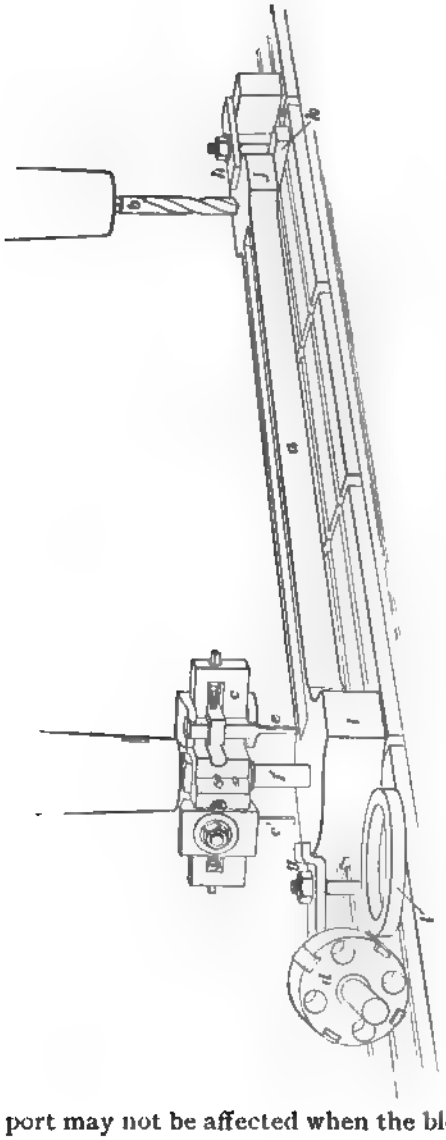

FIG. 30.

35. Circular parallels *l* of different thicknesses are often used in blocking up the ends of the rod, each size of rod having its own set of parallels. The inside diameter of the parallel is somewhat greater than the diameter of the corresponding hole in the rod, in order that the support may not be affected when the block of metal is removed.

FIXTURES FOR SUPPORTING AND ROTATING WORK.

36. V Supports.—Fig. 21 shows a very useful device for drilling cylinders. Two pedestals *a* of a suitable height are placed on the base of the drilling machine at a sufficient distance apart to accommodate the work to be drilled. Two V-shaped bearings *b* are placed on the pedestals, and are so lined up that the center of a shaft lying on them will lie in

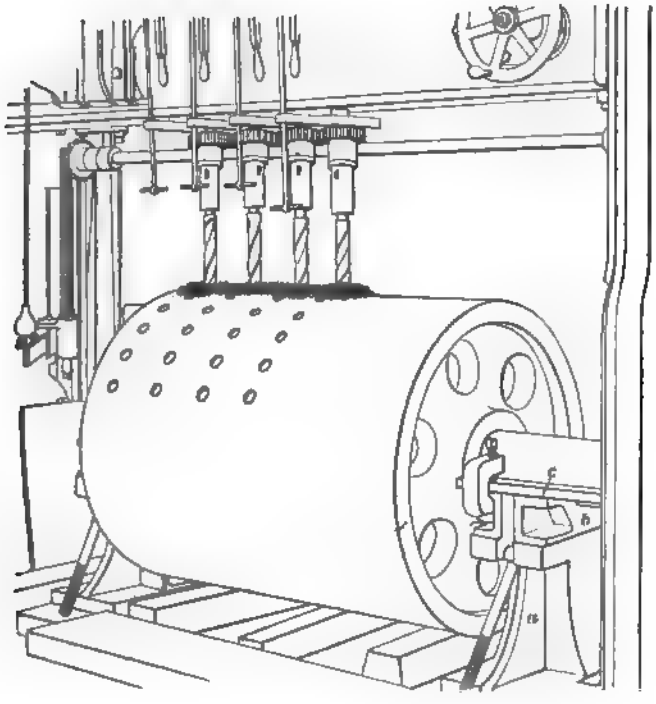

FIG. 21.

the center lines of the drill spindles. The drills will, therefore, always drill radial holes in a cylinder whose shaft rests on these V's and it is necessary simply to lay out the holes, drop the cylinder with its shaft in place, adjust the drill spindles to the right distance apart, and drill in circles about the cylinder, as indicated by the rows of holes shown,

the cylinder being turned on the V's until each successive set of holes comes under the drills. The cylinder is kept from working endwise by the bar *c*, which is set against the hub and clamped to the pedestal. The cylinder shown in this illustration is a crushing roll for anthracite coal. When the holes are drilled, they must be reamed before the teeth are inserted.

37. Roller Supports.—Fig. 22 illustrates a roll set up ready for reaming in a radial drill. It is supported on four rollers *a*, held in two frames *d*, *d*, one at each end of the roll. The first row of holes is adjusted vertically above the axis

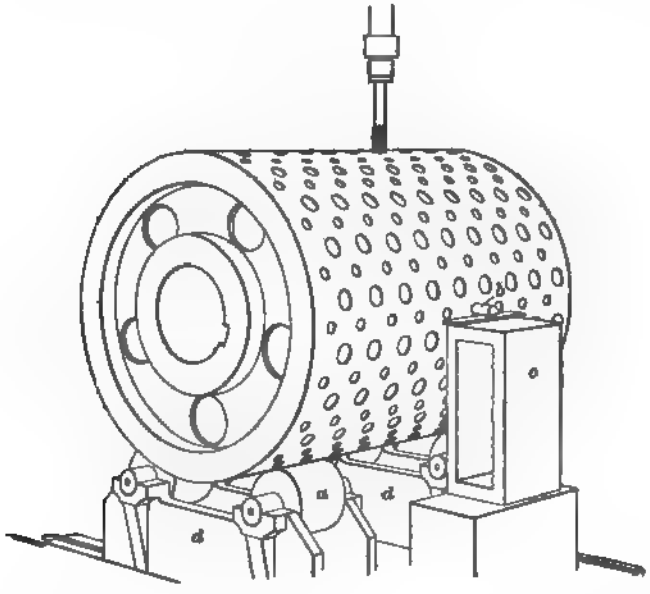

FIG. 22.

of the roll by means of a surface gauge, with which a set of holes on opposite sides of the center are brought an equal distance from the floor. When this adjustment has been made, a pin *b* is inserted in a hole about the height of the center line, and a block *c* is so fitted that the pin rests on it.

This acts as a stop to prevent the roll from turning. When one row of holes is reamed, the pin is moved down one row and then brought up by turning the roll until it again rests on the block, thus furnishing a very simple means for adjusting each successive row.

38. Heavy Centers.—Fig. 23 shows a very good device for holding heavy parts with circular ends, such as pump chambers, under a radial drill. Two uprights *a*, *a*, with two cones *b*, *b*, provided with roller bearings, support the work, the cones entering the ends of the work, as shown. A rod *c* passing through the center of the cones and the casting keeps the uprights from spreading. The piece is set in the correct position for drilling one set of flanges, the tie-rod *c* is tightened, and all the holes in this plane are then

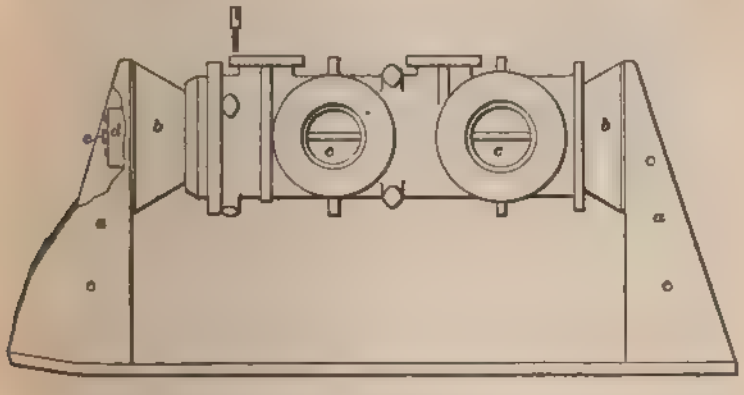

FIG 23.

drilled. The rod is then loosened slightly, and the piece turned until another set of holes comes into position, when *c* is again tightened, and the drilling on this face is performed. This operation is repeated until all the holes are drilled. The rollers in the hub *d* reduce the friction of the bearings so that heavy pieces may be turned with comparative ease. When any regular series of spaces is required, a special index may be attached at one end, to facilitate the setting.

39. Double Face Plate.—A double face plate, for the purpose of supporting work that has faced circular flanges with regularly spaced bolt holes, is shown in Fig. 24. Two face plates *a* and *b* are supported by means of a bearing on each side of the bracket *c*, which may be clamped on the floor plate of a drilling machine. The flanged piece *d*, which is to be drilled and faced at *e*, *f*, and *g*, and at corresponding points opposite *e* and *f*, is attached to the face plate by means of three arms *h*, bolted to the plate by bolts *i*, and to the flanges by bolts *j*.

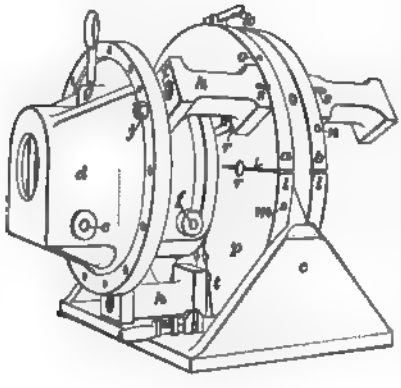

FIG. 24.

The face plates are rotated to the right position for drilling, where they are held in place by the latch *k*, which enters notches in the plates. By placing notches at proper points, holes may be drilled at any angle. In the piece shown, the holes are drilled at right angles to each other, and the face plates are held in position by the notches at *k* and *l*. The plates are rotated by means of bars inserted in a series of holes *m*, *n*, *o*, etc. about the circumference.

40. The illustration shows only one piece attached to the plate *a*. In doing work, ordinarily, another piece is attached to the plate *b*, thereby balancing the device so as to prevent springing the bracket *c*, or cramping while turning to a new position. This also permits twice as many holes to be drilled without moving the face plate as when only one piece is attached, while the service of the power crane is required only one-half as often.

The face plates may be made to take pieces of various sizes by moving the arms *h* to suitable positions. A series of holes for the bolts *i* are provided in the face plates shown,

to accommodate pieces of different sizes. A large variety of work may be supported in this way by means of suitable arms. A key *s* under each arm, which fits into a corresponding keyway, as shown at *t*, together with the bolt *i*, locates the arm positively. When the piece is enough out of balance to prevent turning it, counterweights may be attached to the face plates, as in balancing work in the lathe.

41. Trunnion Supports.—Fig. 25 shows a fixture of this class for drilling duplex pump cylinders. The cylinders *a*, *b* are held by means of two plates *c*, which, on one side, have projections entering the ends of the cylinders, and, on the other side, trunnions *d*, which rest on V's on the

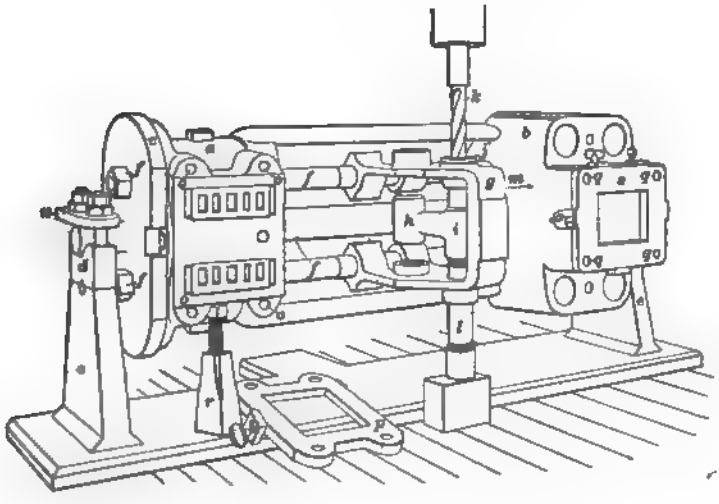

FIG. 25.

uprights *e*, *e* of the frame of the fixture. Bolts *f*, *f* hold the plates *c* in place and form guides for the jig *g*, by means of which holes are drilled in the hubs *h* and *i*. When the fixture is in position for drilling, the trunnions are fastened by means of the clamps *n*.

The illustration shows the bushing *j* and the drill *k* in place, ready to drill the hole. The hub *i* is supported on the

lower side by a piece of pipe *l*. When both the hubs *h* and *i* are drilled, the jig *g* is moved away from the hubs in the direction of the arrow *m*, and the ends of the hubs are faced by means of a double-end cutter. The clamp *n* is then loosened and the cylinders turned on the trunnions *d* to the next position to be drilled. The four holes *o*, *o*, *o*, *o* are drilled by means of the jig *p*, which is lying on the floor, while the four holes *q*, *q*, *q*, *q* are drilled with the jig *s* attached as shown. These cylinders have holes to be drilled on four sides, and must be set in as many positions. When the piece is once set up for one position, it is a simple matter to move it to any of the other positions. Screw jacks *r* are used in adjusting and holding the work. The piece may be set in position by means of a square or level.

MISCELLANEOUS TOOLS AND FIXTURES.

TREPANNING DRILL.

42. Fig. 26 illustrates a special hollow drill designed for the purpose of removing test bars from a solid piece. The drill is run into the metal as far as the central core will permit, when it is withdrawn and, at a point that will cut off the core at the bottom, a hole is drilled at right angles to it

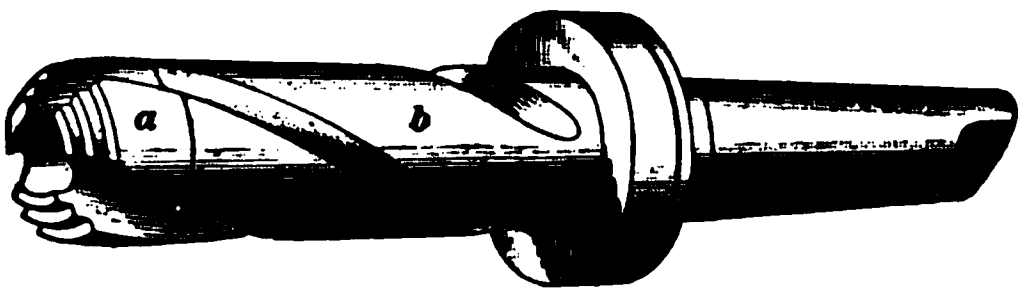

FIG. 26.

with an ordinary twist drill. The core is then taken out and turned up to the proper dimensions for testing purposes. The point *a* of this form of **trepanning drill** can easily be removed from time to time, at small expense. It is made of hardened steel and is screwed to a soft-steel body *b*.

HUBBING TOOL.

43. A very useful **hubbing tool** is shown in Fig. 27. A hub *a* of the piece *b* is to be finished as shown at *c*. The tool with which this is done consists of a center bar *d*, which fits the bore of the hub, and a tool *e* supported on the arm *f*.

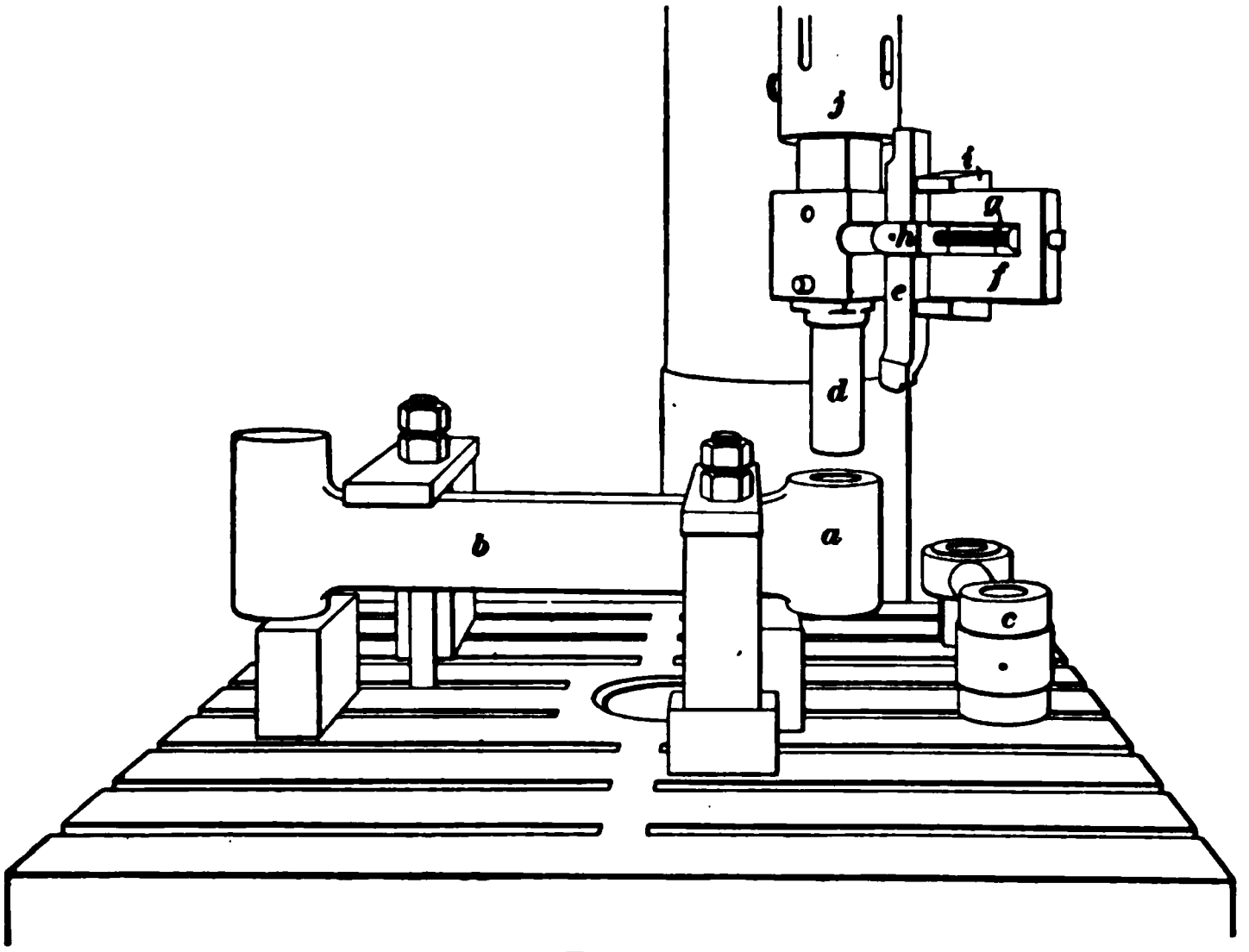

FIG. 27.

As the tool is rotated about the center of the pin, it cuts a perfect circle. The device is attached to the spindle *j* of a heavy drilling machine, the work being fastened upon the table. The radius at which the tool cuts is regulated by the adjusting screw *g* and a clamp *h i*.

SPECIAL EXTENSION ARMS FOR VERTICAL BORING-MILL TABLE.

44. On a boring mill it is necessary at times to turn work that is larger in diameter than the boring-mill table. Fig. 18, *Drilling and Boring*, Part 2, shows how such a piece may be carried by means of extension arms.

There are, however, cases where the extension arms must project so far beyond the edge of the table, and where the weight is concentrated so near the end, that additional support is needed to prevent objectionable springing. Fig. 28

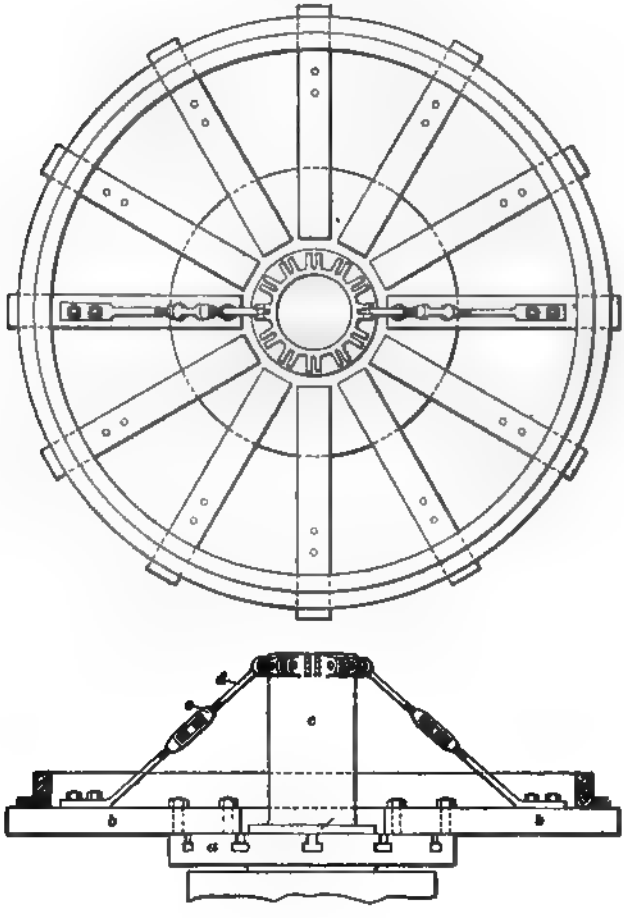

FIG. 28.

suggests a means of providing such support when the center of the piece is open, as in the case shown. The table *a* of the boring mill is of the ordinary type, with radial slots.

The extension arms *b* are bolted to the table in the ordinary way. At the center of the table a pillar *c*, with a flanged foot that is bolted to the table, furnishes the upper support for diagonal tie-rods *d* whose lower ends are bolted to the arms, thus forming an additional support. Turnbuckles *e* in the tie-rods permit the arms to be adjusted approximately level, after which a light surface cut may be taken to true them up perfectly. The piece may then be fastened in any convenient way that its shape will permit, and turned up.

This is a comparatively inexpensive and very efficient shop expedient, which, however, may or may not be a means of economy, depending on the number of pieces for which it can be used and the cost of having the work done in a shop equipped for it. Shop expedients are frequently resorted to when the work could have been done outside more cheaply. Great caution should be exercised in the construction of shop expedients, in order that true economy may be practiced.

FIXTURES FOR TURNING SPHERICAL SURFACE.

45. A special fixture for turning a spherical surface on a vertical boring mill is shown in Fig. 29, an ordinary vertical boring mill being used. The machine has two saddles. One of them *a* has bolted to it a bracket *c*, which carries a pin *d*, around which swings the link *e*. The saddle is so clamped to the cross-rail that the point *d* lies in a vertical line forming the axis of rotation of the table. The other saddle *b* is detached from the cross-feed screw in the cross-rail, and is free to move. A bracket *f*, having a roller on each end that bears on the cross-rail, is attached to the saddle so as to carry its weight, thus reducing the friction and providing a free motion along the rail. The boring bar *g* has an arm *h* attached near its upper end, which carries the fulcrum *i* of the link *e*. The link *e* continues to a point *j*, where a vertical link *k* is pivoted. At the lower end, *k* takes hold of the lever *l* at *m*. The lever *l* is pivoted at *n*

... Drill and Machine Company.)

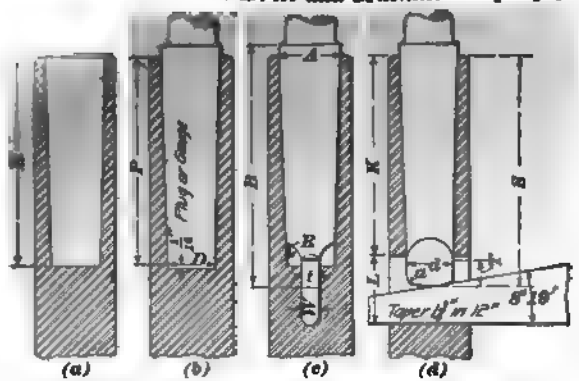

Number of Taper.	Diam. of Plug at Small End.	Diam at End of Socket.	Standard Plug Depth.	Whole Length of Shank.	Depth of Hole.	End of Socket to Keyway.	Length of Keyway.	Width of Keyway.	Length of Tongue.	Diameter of Tongue.	Thickness of Tongue.	Radius of Mill for Tongue.	Radius of Tongue.	Shank Depth.	Taper per Foot.	Taper per Inch.	Number of Key.
	D	A	P	B	H	K	L	W	T	d	t	R	a	S			
1	.369	.475	$2\frac{1}{8}$	$2\frac{9}{16}$	$2\frac{3}{16}$	$2\frac{1}{16}$	$\frac{3}{4}$	.213	$\frac{5}{16}$	.35	$\frac{13}{64}$	$\frac{3}{16}$	.05	$2\frac{3}{8}$	.600	.05000	1
2	.572	.700	$2\frac{9}{16}$	$3\frac{1}{16}$	$2\frac{5}{8}$	$2\frac{1}{2}$	$\frac{7}{8}$	.260	$\frac{3}{8}$	$\frac{17}{32}$	$\frac{1}{4}$	$\frac{1}{4}$	.06	$2\frac{7}{8}$	.602	.05016	2
3	.778	.938	$3\frac{3}{16}$	$3\frac{3}{4}$	$3\frac{1}{4}$	$3\frac{1}{16}$	$1\frac{1}{16}$	.322	$\frac{7}{16}$	$\frac{3}{4}$	$\frac{5}{16}$	$\frac{9}{32}$	.08	$3\frac{9}{16}$	.602	.05016	3
4	1.020	1.231	$4\frac{1}{16}$	$4\frac{3}{4}$	$4\frac{1}{8}$	$3\frac{7}{8}$	$1\frac{1}{4}$	.478	$\frac{1}{2}$	$\frac{31}{32}$	$\frac{13}{32}$	$\frac{5}{16}$	.10	$4\frac{1}{2}$	.623	.05191	4
5	1.475	1.748	$5\frac{3}{16}$	6	$5\frac{1}{4}$	$4\frac{15}{16}$	$1\frac{1}{2}$	.635	$\frac{5}{8}$	$1\frac{13}{32}$	$\frac{5}{8}$	$\frac{3}{8}$	.12	$5\frac{3}{4}$	.630	.05250	[illegible]
6	2.116	2.494	$7\frac{1}{4}$	$8\frac{5}{16}$	$7\frac{3}{8}$	7	$1\frac{3}{4}$	.760	$\frac{7}{8}$	2	$\frac{3}{4}$	$\frac{1}{2}$	.15	[illegible]			

on an arm *o* attached to the bottom of the boring bar, and at its end carries the tool *p*.

46. The piece *q* to be turned is fastened centrally upon the table *r* of the boring mill. It will be seen that if the links are properly proportioned, a parallel motion is obtained, and the tool travels in an arc of a circle about the center of a sphere, and will turn a true sphere when the

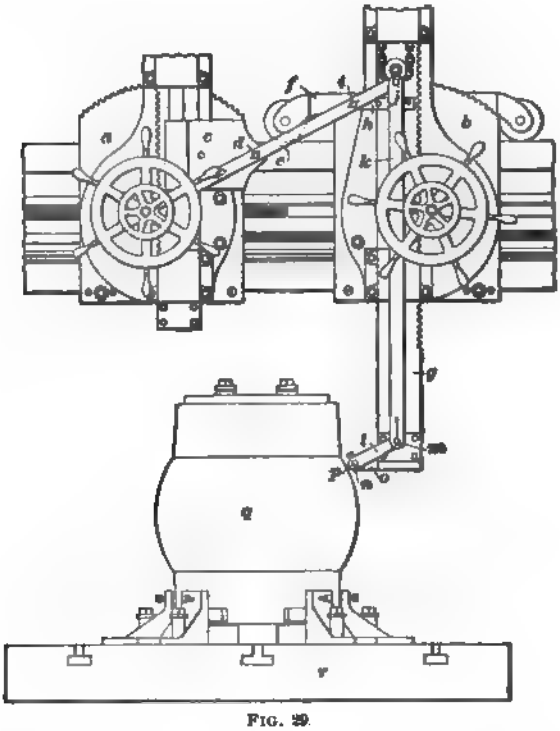

FIG. 29.

table is rotated and the boring bar is fed down. In order to accomplish this, the length of the link *k* and the vertical distance between the pivots *i* and *n* must both be equal to the vertical distance between the center of the sphere to be turned and the pivot *d*; the distance *d i* must be equal to the distance from the center of the sphere to the pivot *n*,

that is, the sum of the radius of the sphere and the distance of the tool point from its pivot *n*, and the distance *i j* must be equal to the distance *n m*.

As the bar *g* is fed up, the saddle *b* will travel toward the center when turning the upper half of the sphere, in order to permit the point *i* to swing about its center *d*, and the point *n* travels in an arc of the same radius about the center of the sphere. As the bar *g* moves down from the center of the sphere *q*, the saddle *b* will again travel toward the center of rotation.

It is obvious that if the distance *d i* is made equal to the sum of the required radius of the sphere and the distance from the tool point to the pivot *n*, the tool will form a perfect sphere of the required radius. It is evident, too, that the center line of the link *n m* will always point to the center of the sphere, and the tool will cut at the same point, as it travels along. In this work, a narrow, round-nosed tool is used with a comparatively light feed, so as to insure a smooth surface.

TABLES.

47. The following tables are reprinted from the publications of the manufacturers whose names appear at the head of each.

Tables I and II give actual dimensions of Morse tapers and taper shanks. Table I gives dimensions relating to the taper of the shank and the thickness of the tang. In Table II, Figs. (*a*) and (*b*) refer to the taper of the socket alone, while (*c*) and (*d*) refer to the shank, the tang, the slot, and the key. Dimension *C* of Table I must not be confused with *d* of Table II; *C*, Table I, is to be used in forming the taper only, while *d* is the width of the parallel end of the tang, which is somewhat smaller than the small end of the taper.

Table III deals with the speed of drills of sizes ranging from $\frac{1}{16}$ inch to 2 inches in diameter, working in soft steel, iron, and brass. It will be observed that the speed

recommended for iron is somewhat higher, and the speed for brass about twice as high, as that for soft steel.

The data preceding Table III has reference to the feeds of drills and the necessity of using lubricants when drilling in steel and wrought and malleable iron.

Table IV shows the number of revolutions necessary to give a cutting speed of a certain number of feet per minute for drills of various diameters. This table is applicable to any tool traveling along a circular path.

Tables V and VI give the diameters of drills for taps of different diameters for V, U. S. Standard, Whitworth, and pipe threads.

The decimal equivalents of the numbers of the twist-drill and steel-wire gauge are given in Table VI of *Measuring Instruments*.

TABLE I.

MORSE TAPER SHANKS.

(*From Morse Twist Drill and Machine Company.*)

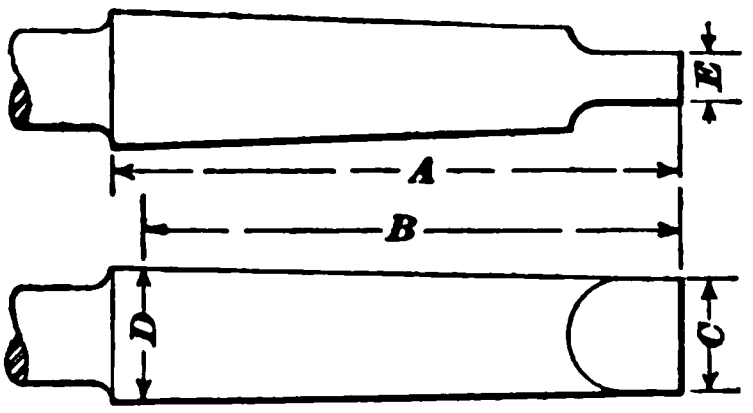

No.	*A*	*B*	*C*	*D*	*E*	Taper in 12 Inches.
1	$2\frac{9}{16}$	$2\frac{3}{8}$	.356	.475	$\frac{13}{64}$	.600
2	$3\frac{1}{16}$	$2\frac{7}{8}$	.556	.700	$\frac{1}{4}$	.602
3	$3\frac{3}{4}$	$3\frac{9}{16}$	.759	.938	$\frac{5}{16}$	.602
4	$4\frac{3}{4}$	$4\frac{1}{2}$	.997	1.231	$\frac{15}{32}$	.623
5	6	$5\frac{3}{4}$	1.446	1.748	$\frac{5}{8}$	.630
6	$8\frac{5}{16}$	8	2.077	2.494	$\frac{3}{4}$	.626

MORSE TAPERS.

(From Morse Twist Drill and Machine Company.)

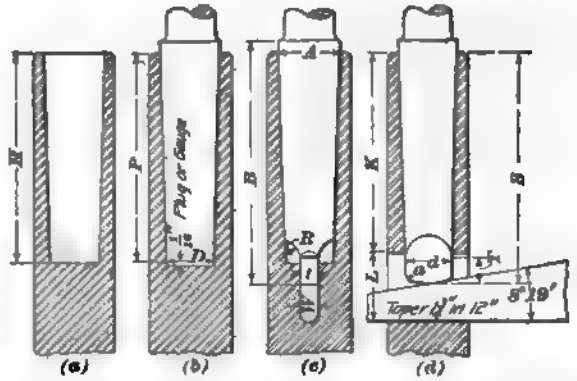

Number of Taper.	Diam. of Plug at Small End.	Diam. at End of Socket.	Standard Plug Depth.	Whole Length of Shank.	Depth of Hole.	End of Socket to Keyway.	Length of Keyway.	Width of Keyway.	Length of Tongue.	Diameter of Tongue.	Thickness of Tongue.	Radius of Mill for Tongue.	Radius of Tongue.	Shank Depth.	Taper per Foot.	Taper per Inch.	Number of Key.
	D	*A*	*P*	*B*	*H*	*K*	*L*	*W*	*T*	*d*	*t*	*R*	*a*	*S*			
1	.369	.475	$2\frac{1}{8}$	$2\frac{9}{16}$	$2\frac{3}{16}$	$2\frac{1}{16}$	$\frac{3}{4}$	.213	$\frac{5}{16}$	.35	$\frac{13}{64}$	$\frac{3}{16}$	.05	$2\frac{3}{8}$	.600	.05000	1
2	.572	.700	$2\frac{9}{16}$	$3\frac{1}{16}$	$2\frac{5}{8}$	$2\frac{1}{2}$	$\frac{7}{8}$	.260	$\frac{3}{8}$	$\frac{17}{32}$	$\frac{1}{4}$	$\frac{1}{4}$	.06	$2\frac{7}{8}$	.602	.05016	2
3	.778	.938	$3\frac{3}{16}$	$3\frac{3}{4}$	$3\frac{1}{4}$	$3\frac{1}{16}$	$1\frac{1}{16}$	.322	$\frac{7}{16}$	$\frac{3}{4}$	$\frac{5}{16}$	$\frac{9}{32}$	.08	$3\frac{9}{16}$	.602	.05016	3
4	1.020	1.231	$4\frac{1}{16}$	$4\frac{3}{4}$	$4\frac{1}{8}$	$3\frac{7}{8}$	$1\frac{1}{4}$	.478	$\frac{1}{2}$	$\frac{31}{32}$	$\frac{15}{32}$	$\frac{5}{16}$	.10	$4\frac{1}{2}$	.623	.05191	4
5	1.475	1.748	$5\frac{3}{16}$	6	$5\frac{1}{4}$	$4\frac{15}{16}$	$1\frac{1}{2}$	.635	$\frac{5}{8}$	$1\frac{13}{32}$	$\frac{5}{8}$	$\frac{3}{8}$	.12	$5\frac{3}{4}$	.630	.05250	5
6	2.116	2.494	$7\frac{1}{4}$	$8\frac{5}{16}$	$7\frac{3}{8}$	7	$1\frac{3}{4}$	.760	$\frac{7}{8}$	2	$\frac{3}{4}$	$\frac{1}{2}$	.15	8	.626	.05216	6

TABLE III.

THE SPEED AND FEED OF DRILLS.

(*From Cleveland Twist Drill Company.*)

This table has been compiled from memoranda furnished us, at our request, by about 500 of the best known and most successful manufacturers in this country. We believe that these speeds should *not be exceeded* under ordinary circumstances. A feed of 1 inch in from 95 to 125 revolutions is all that should be required according to the size of the drill. At these speeds it will be necessary to use plenty of oil, or a solution of oil, potash, and water, when drilling steel, wrought, or malleable iron.

It is based on a speed of periphery of the drill of 30 feet per minute for steel, 35 feet per minute for iron, and 60 feet per minute for brass. It will be found advisable to vary the speed given in the table somewhat, according as the material to be drilled is more or less refractory.

Diameter of Drill.	Speed for Soft Steel.	Speed for Iron.	Speed for Brass	Diameter of Drill.	Speed for Soft Steel.	Speed for Iron.	Speed for Brass.
1/16	1,824	2,128	3,648	1 1/16	108	125	215
1/8	912	1,064	1,824	1 1/8	102	118	203
3/16	608	710	1,216	1 3/16	96	112	192
1/4	456	532	912	1 1/4	91	106	182
5/16	365	425	730	1 5/16	87	101	174
3/8	304	355	608	1 3/8	83	97	165
7/16	260	304	520	1 7/16	80	93	159
1/2	228	266	456	1 1/2	76	89	152
9/16	203	236	405	1 9/16	73	85	145
5/8	182	213	365	1 5/8	70	82	140
11/16	166	194	332	1 11/16	68	79	135
3/4	152	177	304	1 3/4	65	76	130
13/16	140	164	280	1 13/16	63	73	125
7/8	130	152	260	1 7/8	60	71	122
15/16	122	142	243	1 15/16	59	69	118
1	114	133	228	2	57	67	114

TABLE IV.

CUTTING SPEEDS.

(*From Beaman & Smith.*)

Feet per Minute.	5	10	15	20	25	30	35	40	45	50
Diam.	Revolutions per Minute.									
¼	38.2	76.4	114.6	152.9	191.1	229.3	267.5	305.7	344.0	382.2
⅜	30.6	61.2	91.8	122.5	153.1	183.7	214.3	244.9	275.5	306.1
½	25.4	50.8	76.3	101.7	127.1	152.5	178.0	203.4	228.8	254.2
⅝	21.8	43.6	65.5	87.3	109.1	130.9	152.7	174.5	196.3	218.9
1	19.1	38.2	57.3	76.4	95.5	114.6	133.8	152.9	172.0	191.1
1⅛	17.0	34.0	51.0	68.0	85.0	102.0	119.0	136.0	153.0	170.0
1¼	15.3	30.6	45.8	61.2	76.3	91.8	106.9	122.5	137.4	153.1
1⅜	13.9	27.8	41.7	55.6	69.5	83.3	97.2	111.1	125.0	138.9
1½	12.7	25.4	38.2	50.8	63.7	76.3	89.2	101.7	114.6	127.1
1⅝	11.8	23.5	35.0	47.0	58.8	70.5	82.2	93.9	105.7	117.4
1¾	10.9	21.8	32.7	43.6	54.5	65.5	76.4	87.3	98.2	109.1
1⅞	10.2	20.4	30.6	40.7	50.9	61.1	71.3	81.5	91.9	101.9
2	9.6	19.1	28.7	38.2	47.8	57.3	66.9	76.4	86.0	95.5
2¼	8.5	17.0	25.4	34.0	42.4	51.0	59.4	68.0	76.2	85.0
2½	7.6	15.3	22.9	30.6	38.2	45.8	53.5	61.2	68.8	76.3
2¾	6.9	13.9	20.8	27.8	34.7	41.7	48.6	55.6	62.5	69.5
3	6.4	12.7	19.1	25.5	31.8	38.2	44.6	51.0	57.3	63.7
3½	5.5	10.9	16.4	21.8	27.3	32.7	38.2	43.6	49.1	54.5
4	4.8	9.6	14.3	19.1	23.9	28.7	33.4	38.2	43.0	47.8
4½	4.2	8.5	12.7	16.9	21.2	25.4	29.6	34.0	38.1	42.4
5	3.8	7.6	11.5	15.3	19.1	22.9	26.7	30.6	34.4	38.2
5½	3.5	6.9	10.4	13.9	17.4	20.8	24.3	27.8	31.3	34.7
6	3.2	6.4	9.6	12.7	15.9	19.1	22.3	25.5	28.7	31.8
7	2.7	5.5	8.1	10.9	13.6	16.4	19.1	21.8	24.6	27.3
8	2.4	4.8	7.2	9.6	11.9	14.3	16.7	19.1	21.1	23.9
9	2.1	4.2	6.4	8.5	10.6	12.7	14.9	17.0	19.1	21.2
10	1.9	3.8	5.7	7.6	9.6	11.5	13.4	15.3	17.2	19.1
11	1.7	3.5	5.2	6.9	8.7	10.4	12.2	13.9	15.6	17.4
12	1.6	3.2	4.8	6.4	8.0	9.6	11.1	12.7	14.3	15.9
13	1.5	2.9	4.4	5.9	7.3	8.8	10.3	11.8	13.2	14.7
14	1.4	2.7	4.1	5.5	6.8	8.1	9.6	10.9	12.3	13.6
15	1.3	2.5	3.8	5.1	6.4	7.6	8.9	10.2	11.5	12.7
16	1.2	2.4	3.6	4.8	6.0	7.2	8.4	9.6	10.7	11.9
17	1.1	2.2	3.4	4.5	5.6	6.7	7.9	9.0	10.1	11.2
18	1.1	2.1	3.2	4.2	5.3	6.4	7.4	8.5	9.6	10.6
19	1.0	2.0	3.0	4.0	5.0	6.0	7.0	8.0	9.1	10.1
20	1.0	1.9	2.9	3.8	4.8	5.7	6.7	7.6	8.6	9.6
21	.9	1.8	2.7	3.6	4.5	5 5	6.4	7.3	8.1	9.1
22	.9	1.7	2.6	3.5	4.3	5.2	6.1	6.9	7.8	8.7
23	.8	1.7	2.5	3.3	4.1	5.0	5.8	6.6	7.5	8.3
24	.8	1.6	2.4	3.2	4.0	4.8	5.6	6.4	7.2	8.0
25	.8	1.5	2.3	3.1	3.8	4.6	5.3	6.1	6.9	7.6
26	.7	1.5	2.2	2.9	3.7	4.4	5.1	5.9	6.6	7.3
27	.7	1.4	2.1	2.8	3.5	4.2	5.0	5.7	6.4	7.1
28	.7	1.4	2.0	2.7	3 4	4.1	4.8	5.5	6.1	6.8
29	.7	1.3	2.0	2.6	3.3	4.0	4.6	5.3	5.9	6.6
30	.6	1.3	1.9	2.5	3.2	3.8	4.5	5.1	5.7	6.4

TABLE V.

TAP DRILLS.

(From New Process Twist Drill Company.)

The following table shows the different sizes of drills that sh
be used when a full thread is to be tapped. The sizes given are p
tically correct.

Diameter of Tap.	Number of Threads to Inch.	Drill for V Thread.	Drill for U. S. S. Thread	Drill for W worth Thr
1/4	16 18 20	5/64 5/64 11/64	5/16	1
5/16	16 18 20	17/64		
3/8	16 18	5/16	1/4	15/64
7/16	16 18	1/4		
1/2	14 16 18	1/4	9/32	9/32
9/16	14 16 18			
5/8	14 16		11/32	11/32
11/16	14 16			
3/4	12 13 14	5/8	13/32	3/8
13/16	12 13 14			
7/8	12 14		7/16	
15/16	12 14			
1	10 11 12	1/2	1/2	1/2
1 1/16	10 11 12	17/32		
1 1/8	11 12	9/16		
1 3/16	11 12			
1 1/4	10 11 12	5/8	5/8	5/8
1 5/16	10 11 12	21/32		
1 3/8	10			
1 7/16	10			
1 1/2	9 10	23/32	11/16	23/32
1 9/16	9 10	3/4		
1 5/8	9			
1 11/16	9			
1 3/4	8		27/32	27/32
1 13/16	8			
1 7/8	8			
1 15/16	8			
2	8			
2 1/16	7 8	13/16	15/16	15/16
2 1/8	7 8	7/8		
2 3/16	7 8	1		
2 1/4	7 8			
2 5/16	7	1 1/32	1 1/16	1 1/16
2 3/8	7	1 1/16		
2 7/16	7	1 3/32		
2 1/2	7	1 1/8		
2 9/16	6	1 1/8	1 5/32	1 5/32
2 5/8	6	1 5/32		
2 11/16	6	1 5/32		
2 3/4	6	1 3/16		
2 13/16	6	1 3/16	1 7/32	1 9/32
2 7/8	6	1 7/32		
2 15/16	6	1 7/32		
3	6	1 1/4		
3 1/16	6	1 9/32		
3 1/8	5 5½	1 9/32 1 5/16	1 5/16	1 23/64
3 3/16	5 5½	1 5/16 1 11/32		
3 1/4	5 5½	1 11/32 1 3/8		
3 5/16	5 5½	1 3/8 1 3/8		
3 3/8	5	1 15/32	1 1/2	1 1/2

TABLE VI.

TWIST DRILLS FOR PIPE TAPS.

(*First three columns from Standard Tool Company.*)

The sizes of twist drills to be used in boring holes to be reamed with pipe reamer and threaded with pipe tap are as follows:

Size. Inches.	Number of Threads Per Inch.	Size of Drill.	Size of Drill In Nearest $\frac{1}{64}$ Inch.
$\frac{1}{8}$	27	.3281	$\frac{21}{64}$
$\frac{1}{4}$	18	.4531	$\frac{29}{64}$
$\frac{3}{8}$	18	.5937	$\frac{19}{32}$
$\frac{1}{2}$	14	.7187	$\frac{23}{32}$
$\frac{3}{4}$	14	.9375	$\frac{15}{16}$
1	$11\frac{1}{2}$	1.1875	$1\frac{3}{16}$
$1\frac{1}{4}$	$11\frac{1}{2}$	1.4687	$1\frac{15}{32}$
$1\frac{1}{2}$	$11\frac{1}{2}$	1.7187	$1\frac{23}{32}$
2	$11\frac{1}{2}$	2.1875	$2\frac{3}{16}$
$2\frac{1}{2}$	8	2.6875	$2\frac{11}{16}$
3	8	3.3125	$3\frac{5}{16}$
$3\frac{1}{2}$	8	3.8125	$3\frac{13}{16}$
4	8	4.3125	$4\frac{5}{16}$

NOTE.—A drill $\frac{1}{64}$ inch larger than the size given in the table is sometimes used when one of the given size is not available.

4. Side milling is always understood to mean that the cutting operation is performed on a plane surface that is *perpendicular* to the axis of rotation of the cutting tool.

5. Angular milling invariably refers to the machining of plane surfaces at an inclination to the axis of rotation of the cutting tool.

6. Grooving, in a certain sense, is a self-explanatory term that refers to the cutting of grooves, or slots, that may have any profile and follow a straight, a helical, or an irregular path.

7. Form milling is a class of milling in which the surfaces operated on are not plane, but which have the same profile throughout the direction in which the work is fed against the cutter. This is most commonly a horizontal direction, but may occasionally be a vertical or an inclined one.

8. Profiling is usually understood to be a milling operation in which the work is guided in a predetermined path by a templet having a suitable outline.

9. Routing is a name given to a milling operation in which the work is presented to the cutter and then guided by hand, whence it follows that the result depends entirely on the skill of the operator.

10. The definitions here given are believed to be in accordance with the most general practice; since there is no universally accepted agreement in regard to them, it must be expected that some people will use the terms in a different sense.

CLASSIFICATION OF MILLING MACHINES.

11. Milling machines may be classified as *plain*, *vertical*, *universal*, *multispindle*, and *special*.

12. Plain milling machines are intended for the finishing of surfaces that require the motion of the work to be in a straight line during the cutting operation. They

are so arranged that the work can be fed to the cutting tool, or *vice versa*, in a vertical direction, and also in two horizontal directions at right angles to each other. The axis of rotation of the cutting tool is normally horizontal.

13. Vertical milling machines derive their name from the fact that the axis of rotation of the cutting tool is vertical. They are usually so arranged that the cutting tool can be fed toward or away from the work in a vertical direction, while the work can be fed to the cutting tool in two horizontal directions at right angles to each other. In some cases the machine is so arranged that the work can be revolved in a horizontal plane for the purpose of finishing circular surfaces.

14. Universal milling machines are so called by virtue of the fact that the numerous attachments furnished with them adapt these machines to a very wide range of work; they can be used for almost every conceivable milling operation within the capacity of the machine. The axis of rotation of the cutting tool is usually horizontal; the work can be fed to the cutting tool in a vertical direction, and also in two horizontal directions; the angle between the latter can be changed within the limits imposed by the design of the machine. By means of special devices the work can be rotated at the same time that it is moved longitudinally in a horizontal direction; this adapts the machine for the production of helical and spiral work. The work can also be rotated in these machines through a definite part of a revolution for each individual cutting operation.

The special devices fitted to a universal milling machine may also be applied to a plain or a vertical milling machine, which are thus to some extent converted into universal milling machines. They will rarely have as wide a range of application, however, as a machine especially designed to be a universal milling machine.

15. Multispindle milling machines, as implied by the name, are fitted with two or more spindles that

carry the cutting tools. Each spindle, and hence each cutting tool, is usually made to be independently adjustable in relation to the work. In most machines of this class, the work can be moved in a straight line in one direction only. Multispindle milling machines are intended for finishing several surfaces simultaneously, and are usually employed for heavy work only.

16. Special milling machines may take any conceivable form that will adapt them for the class of work for which they are designed, but no matter in what manner they are constructed, the principles of operation will be the same as those of any regular milling machines.

CONSTRUCTION OF MACHINE.

ESSENTIAL PARTS.

17. A milling machine consists of certain essential parts, which in some form or other must exist in any of its numerous modifications. The essential parts are the *frame*, the *spindle*, the *table*, the *feed mechanism*, and the *cutting tool*. The function of the frame is the supporting of the spindle, table, and feed mechanism. The spindle, which by suitable means is revolved in bearings provided for it in the frame, carries the cutting tool. The function of the table is to serve as a support for the work, which may be attached either directly to the table or to holding devices carried by it. The feed mechanism serves to move the work past the cutting tool; it may operate directly upon the table, or upon the spindle, or upon both. The function of the cutting tool is self-explanatory.

CONSTRUCTION.

18. The universal milling machine is the most advanced form for general work, and embodies all the features found in other types. For this reason it is here selected and

described. As far as the universal machines of various makes are concerned, their general arrangement is similar

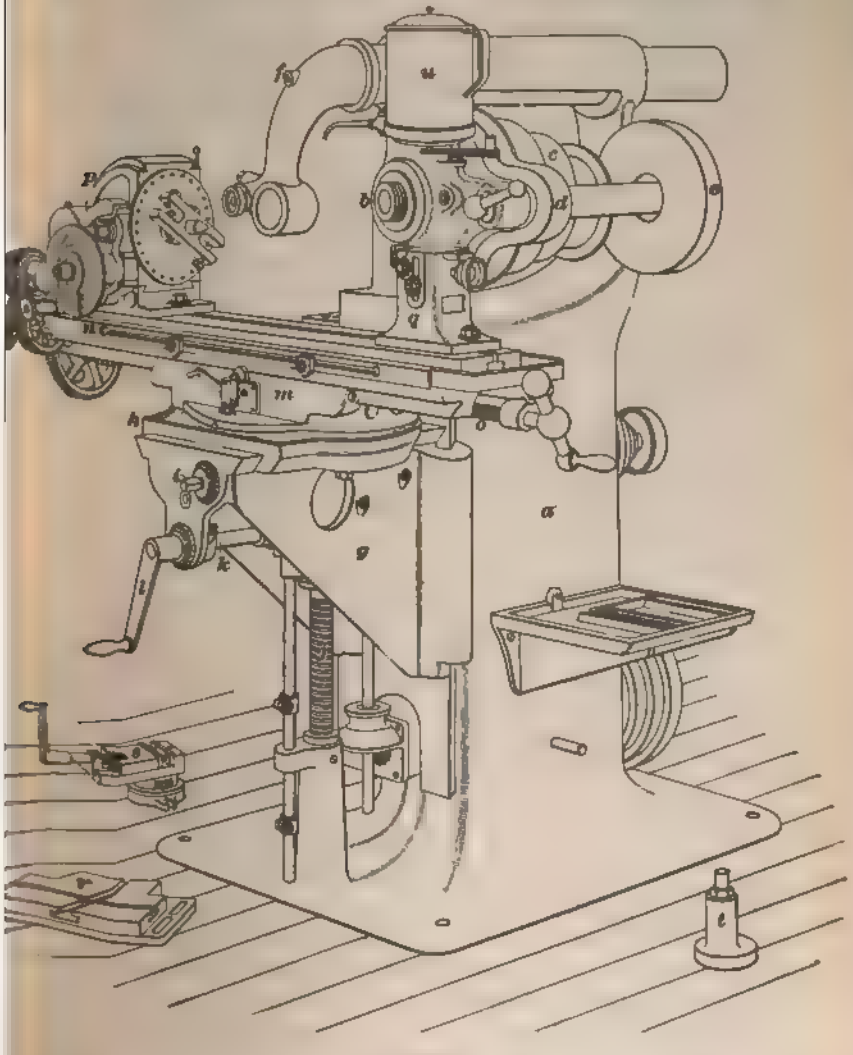

FIG. 1

to that of the machine illustrated in Fig. 1; they differ only in the design of the details, which are modified in accordance

with the personal experience and judgment of their respective designers.

19. Referring to the figure, it is seen that the general form of the **frame** *a* is that of a column or pillar. This frame carries the horizontal **spindle** *b* near its top. The spindle is driven by a belt from a line shaft or countershaft; the belt is placed on the **cone pulley** *c*. The particular design of machine shown is back-geared in order to provide for a larger number of speed changes. The back gearing is similar to that employed for engine lathes and is operated in the same manner, in this case by a handle. In the machine illustrated, the back gears are protected by light metal **guards** shown at *d* and *e*. The spindle is bored out tapering at the front end to receive the shank of the cutting tool or an **arbor** to which the cutting tool is attached. An adjustable arm, or **outboard bearing** sliding in bearings parallel to the spindle, can be used for supporting the free end of the arbor when heavy cuts are taken; when not in use it can be swung out of the way. The arm can be rigidly clamped in position after it has been adjusted.

20. A vertical slide is formed on the front of the frame *a*; a **knee** *g* is fitted to this slide, which is in a plane at right angles to the axis of the spindle. The top of the knee is at right angles to the surface of the slide on the frame, and carries the **clamp bed** *h*, which can be moved along it in a straight line parallel to the axis of the spindle by means of the **cross-feed screw** *i*. The knee can be raised and lowered by turning the **elevating screw** *j*; for the sake of convenience, this is operated from the front of the knee by turning the shaft *k*, which carries a bevel gear that meshes with one on the elevating screw. A detachable handle *l* fits the square end of *i* and *k*. The cross-feed screws and elevating screws are supplied with dials graduated to indicate movements by thousandths of an inch.

21. The clamp bed *h* carries the **saddle** *m*, which is pivoted to it, and which can be rotated through an arc of about 45°; suitable clamping devices are provided for

clamping the saddle to the clamp bed in any position to which it may be swung. The upper part of the saddle forms a slide that receives the **table** *n*; this slides in a line parallel to the top surface of the knee. The table can be moved by means of the **feed-screw** *o*, which is operated by the handle shown. The top of the clamp bed is graduated into degrees; a zero mark on the saddle, by its coincidence with the zero line of the graduation, indicates when the line of motion of the table is *at right angles* to the axis of the spindle, and by its coincidence with the other graduations shows how many degrees the line of motion differs from its position at right angles with the axis of the spindle.

22. The table is fitted with a detachable **index head** *p* and a detachable **tailstock** *q*. The index head and tailstock are fitted with centers between which work may be placed. The spindle of the index head can be rotated by means of a worm-wheel and worm; it is so arranged that it can be swung in a vertical plane around the axis of the worm from slightly below a horizontal position to somewhat beyond a vertical position. On the bottom of the index head are tongues that fit a longitudinal T slot in the table; they insure that the axis of the index-head spindle is always in the same vertical plane as the line of motion of the table. The front end of the index-head spindle is often threaded to receive face plates, chucks, or special devices for holding work; the spindle is almost invariably made hollow, and is bored out tapering to receive a live center or arbors.

23. When the character of the work clamped to the index head requires the axis of its spindle to be at an angle in a horizontal plane to the line of motion of the table, it is first detached from the table; a so-called **raising block** *r* is then bolted to the table in such a position that one of its two T slots is at the required angle, and the index head is attached to that T slot of the raising block. When the diameter of the work is so large that it cannot be attached to the index head if the latter is fastened directly to the table, the index head is raised by means of the raising block.

When no raising block is available, parallel strips may be used for the same purpose. The tailstock *q* has the dead center mounted in a block fitted to a slot of the tailstock. This block can be raised or lowered a certain amount in order to bring the dead center in line with the live center when tapering work is placed between them.

24. A **milling-machine vise** *s*, which can be rotated and then clamped in any position to the table, is used for holding work. When comparatively slender work is to be milled between the centers, it will naturally spring under the cutting operation. This tendency is counteracted by placing a **center rest** or **steady rest** *t* on the table and adjusting it properly to support the work. An oil tank is shown at *u*.

25. The machine shown is provided with an **automatic feed** for the table, which, by means of adjustable tappets, can be made to stop at a predetermined point. A vertical feed for the knee is also provided. The knee and the clamp bed may be clamped rigidly to their slides at any point by a suitable arrangement. Adjustable stops are also provided for the knee and table; they are used when a number of duplicate pieces are to be milled, and the feeding is done by hand.

26. The inside of the frame of universal milling machines usually serves as a cupboard in which cutters, change gears, collets, arbors, wrenches, and other small parts may be conveniently kept.

27. When milling machines of different types are carefully examined, they will be found to have some of the features of the universal milling machine embodied in them in one form or another. In one case the cutting tool may be fed to the work, and in another case the work may be fed to the cutting tool; in one case the feeding may be accomplished by a lever operating upon a pinion and rack, and in another case the feeding may be done by turning a feed-screw; no matter, however, in what form the essential

parts appear and what their construction may be, it will be found that the fundamental principles and the function of the essential parts are the same in each case.

Furthermore, a person that can operate one type of machine successfully can, after getting accustomed to the methods of adjustment of another type, operate it with equal ease. As far as special methods of adjustment are concerned, they can always be readily traced out by a little intelligent study. For this reason, no attempt is here made to describe all the different types and the subclasses of each type in detail.

ADVANTAGES OF MILLING MACHINES.

28. It was conceded for a long time that milling was superior to other processes of machining by reason of the fact that by the use of properly formed cutting tools, pieces of work having an intricate profile could be duplicated within such small limits of variation as to be interchangeable. This could be done at a rate of speed that was not feasible with any other method of machine work, and consequently at a lower time cost per piece. The milling machine can truly be said to have been the most potent factor that made possible the application of the interchangeable system to the economic production of work done in large quantities, as firearms, sewing machines, typewriters, etc. As a matter of fact, the milling machine was developed originally in armories manufacturing small firearms, and for a long time was unknown outside of them. Of late years, it is gradually becoming recognized that the process of milling cannot only be applied to a great variety of work usually performed in the planer, shaper, slotter, and lathe, but that also, by reason of the multiplicity of cutting edges and the continuous cutting operation, the work in many instances can be machined by milling at a much lower time cost.

29. While intelligent superintendence, i. e., the making of the tools and special fixtures for the milling machines,

calls for skill of a very high order, the fact remains that when the machine operates on work done in large quantities, the actual placing of the work into it, taking the cut, and removing the work can be safely entrusted to comparatively unskilled labor after the machine has been properly adjusted by a skilled workman. In such a case, one machine tender can often look after several machines without inconvenience. In consequence of this, there will be a material reduction in the labor cost per piece.

30. When the milling machine is used as a substitute for other machine tools, on work other than duplicate work, the machine cannot be placed in the charge of unskilled persons if its production is to compete in cost with that of other machine tools. In such cases, there is at least as much skill called for as is required for the successful operation of the machine tool whose place is taken by the milling machine.

MILLING CUTTERS.

CLASSIFICATION OF CUTTERS.

31. The cutting tool used for milling is known as a **milling cutter.** Milling cutters found in practice may be classified as *plain milling cutters*, also called *common*, *axial*, and *surface milling cutters*, *side milling cutters*, also called *face* or *butt mills*, *angular milling cutters*, *end milling cutters*, and *form cutters*. Side mills and end mills are also called *radial mills*. Any one of these cutters may be a solid, an inserted-tooth, a shank, or a shell cutter, and it may be fastened to the spindle of the milling machine by holding it in a chuck, by clamping it to an arbor, by screwing it to the spindle or to a shank fitted to the latter, or, finally, it may be formed with a shank that fits the spindle.

32. Milling cutters are called **right-handed** and **left-handed** in accordance with their direction of rotation when cutting. In order to tell whether a cutter is right-handed

or left-handed, hold it level with the eye and *with the side of the cutter that is toward the spindle toward the eye.* Then if the cutter must revolve in the direction in which the hands of a watch move, it is *right-handed;* when it must revolve in a direction opposite to that in which the hands of a watch move, it is *left-handed.*

CONSTRUCTION OF CUTTERS.

PLAIN MILLING CUTTERS.

33. Slitting Saw.—A **plain milling cutter** may be defined as one intended for machining surfaces parallel to the axis of rotation of the cutter. The simplest form of a plain milling cutter is the **slitting saw** shown in Fig. 2. This saw is clamped between washers to an arbor; a number of cutting edges are formed on its periphery by serrating it. These cutting edges are ground after hardening so that they all are exactly the same distance from the axis, in order that each cutting edge will do the same amount of work. Slitting cutters, like the one shown, are ground with clearance on the sides; that is, they are made slightly thinner at the center than at the periphery, so that deep slots can be cut, or stock can be cut off, without having the sides of the cutter bind in the slot.

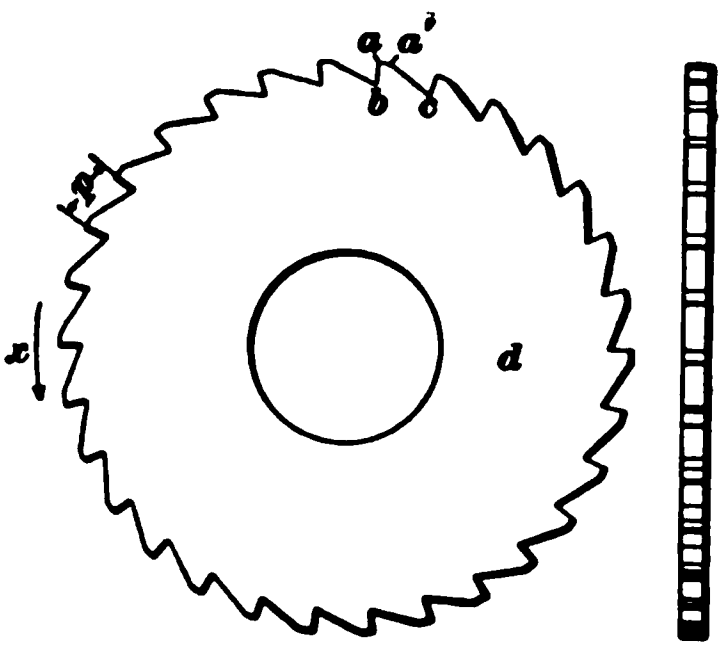

FIG. 2.

34. Screw Slotting Cutter.—When shallow slots are to be cut, as, for instance, the slots in screw heads, the cutter is made with teeth having a much finer pitch; the sides are then usually left parallel, in order to save expense in making the cutter. This kind of a cutter is given the

name of **screw slotting cutter,** since it is most frequently used for that purpose. While used by some for cutting off stock, it is not as well adapted for this purpose as the slitting cutter, since on thick stock the sides of the cutter, especially if the teeth are at all dull, will bind in the stock being sawed.

35. Parts of the Cutter. — The term **pitch,** when applied to the teeth of a milling cutter, refers to the distance between adjacent cutting edges. Since in milling cutters the teeth are equally spaced, the pitch can be found by dividing the circumference of the cutter by the number of teeth. The plane represented by the line *a b* is called the **front face** of the tooth. In American practice, it is almost invariably made radial; that is, the front face lies on a plane that passes through the axis of the cutter. In side milling cutters, this rule is occasionally departed from for the purpose of throwing the chips in a certain direction. The surface *a a'*, Fig. 2, is called the **top face** of the tooth; the angle included between *a b* and *a a'* varies from 85° to 87°, thus giving a clearance of from 3° to 5°. The edge *a* is the **cutting edge,** and the surface whose edge is *a' c* is the back of the tooth. The cutter, in order to cut, must rotate so that the front faces of the teeth move *toward* the work, or in the direction of the arrow *x*.

36. Reversible Cutters.—Any milling cutter that is reversible, i. e., which can be placed with either side toward the spindle, as is the case with most milling cutters fastened to an arbor, will serve for a right-handed cutter or a left-handed cutter, depending on which side of the cutter is placed toward the spindle. Thus, if the cutter illustrated in Fig. 2 is placed with the side *d* toward the spindle, it is a left-handed cutter; but if the side *d* is placed away from the spindle, it is a right-handed cutter.

37. Straight and Helical Cutting Edges. — By making the slitting cutter wider, it becomes the **plain cutter** shown in Fig. 3 (*a*). It seems to be the common

practice to limit the terms "slitting" and "slotting" cutters to cutters that are narrower than one-quarter inch; when wider, they are usually called **plain cutters, cylindrical cutters,** or **parallel cutters.** The cutter shown in Fig. 3 (*a*) has straight cutting edges, by which is meant that they lie in planes passing through the axis. A milling cutter with straight cutting edges will answer very well for surfaces that are relatively narrow, say not over 1 inch wide; it also has the advantage that straight cutting edges

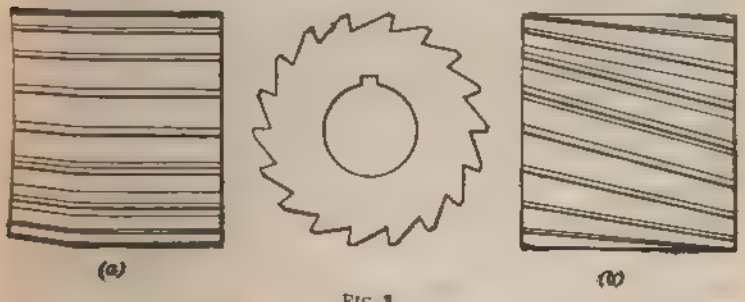

FIG. 3.

are cheaply produced. On the other hand, each cutting edge, when in contact with the work, will cut at once across the whole width of the surface operated on; consequently, considerable power will be needed, and as each cutting edge strikes throughout the whole width of the surface, a distinct blow is struck by it, which will set up vibrations and prevent, to a large extent, smooth, even milling, unless the machine is exceptionally rigid and the work held very securely.

38. The objections to the straight-tooth cutter have led to the design of cutters with helical cutting edges; such a cutter is shown in Fig. 3 (*b*). When a surface is being machined, the teeth will commence cutting at one corner, and the cut will gradually proceed across the surface. In consequence of this shaving action, the severity of the blow struck by each cutting edge on engaging the work is greatly lessened; experience has also shown that for equal conditions, less power will be required for a cutter with helical

cutting edges than for one with straight cutting edges. The lessening of the severity of the blow struck by each edge on engaging the work means a reduction of vibration, and, hence, under equal conditions, the cutter with helical cutting edges will produce a smoother surface.

39. Definitions of Helix and Spiral. — It is to be regretted that it has become the practice among some writers, and hence among many mechanics, to use the terms *helix* and *spiral* as synonymous, i. e., as having the same meaning.

In geometry, a **helix** is a line generated by the rotation of a point around an axis, the point remaining at the same distance from the axis but advancing in the direction of its length. The most familiar examples of helixes are screw threads and the grooves of twist drills.

A **spiral** is a line generated by the progressive rotation of a point around an axis, the point gradually increasing its distance from the axis. When the point rotates in a plane, its path is called a **plane spiral.** The most familiar example of a plane spiral is a watch spring, where all convolutions lie in the same plane.

When a point rotates around an axis at a continually increasing distance from the axis, and at the same time moves in the direction of the axis, in other words, if the point follows the surface of a cone, its path is a **conical spiral.** Probably the most familiar examples of a conical spiral are conical bed springs, and the springs used for seating the water valves in many designs of steam pumps.

40. From the definition it will be seen that a helix is a particular form of a spiral, and that a spiral becomes a helix when the path of the point generating it lies on the surface of a cylinder. In this Course the terms helix and spiral will be used in their true meaning; that is, in accordance with the definitions just given.

41. Nicked Teeth.—Experience has shown that the power required to drive a milling cutter can be greatly reduced by nicking the teeth of helical milling cutters in

the manner shown in Fig. 4, where the nicks are so arranged that a cutting edge will be behind a nick. With such a cutter, the chips are broken up; that is, instead of one continuous shaving, a number of separate shavings are made by each cutting edge. Since it has been shown by experience that less power is required for a nicked cutter, it follows that with the same amount of power available and under equal conditions, a much wider and deeper cut can be

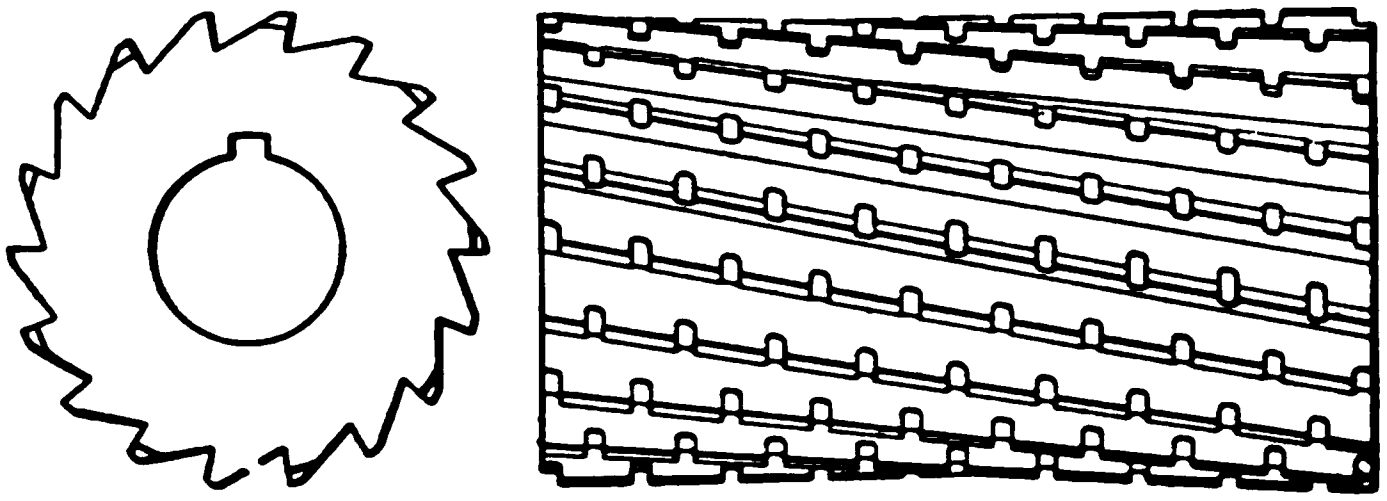

FIG. 4.

taken than is possible with an ordinary helical cutter. For this reason, cutters with nicked teeth are now very generally employed for heavy milling where the rapid removal of superfluous metal is the prime requisite. It is claimed that a surface cannot be machined as smooth with a nicked cutter as with a plain cutter; but if the nicked cutter is carefully made and kept sharp, there seems to be no reason, however, why it cannot produce as good work on a finishing cut as a plain cutter.

42. Built-Up Plain Cutters.—The cutters shown in Figs. 2, 3, and 4 are *solid cutters*, which means that they are made from a single piece of steel. Solid cutters can be obtained as large as 8 inches in diameter and 6 inches wide; this size is about their commercial limit. When larger cutters are wanted, they are usually made with blades or teeth of tool steel that are inserted in a body of inexpensive material in such a manner that they can be removed and replaced when worn or broken. There are a great many different ways in which such cutters may be made.

43. Fig. 5 shows the construction adopted by the Morse Twist Drill and Machine Company for cutters of the inserted-blade type. Referring to the illustration, it will be seen that the blades *a*, *a* are inserted in rectangular slots cut into the body *b*. A clamp *d* is placed between each alternate pair of blades; this clamp can be drawn inwards by

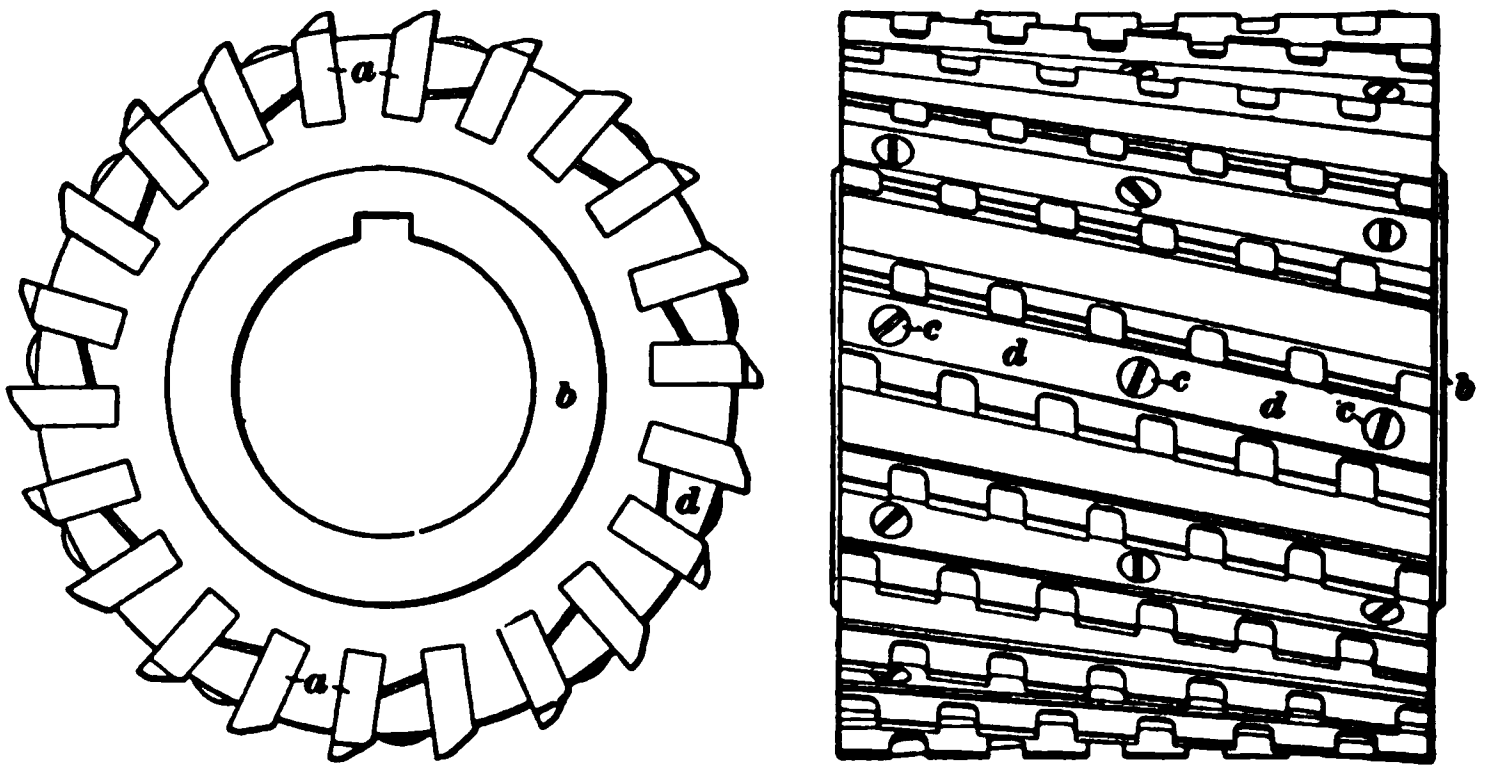

FIG. 5.

setting up the screws *c*, *c*, which operation presses the two blades against opposite sides of their slots and locks them. The blades themselves are straight, but their cutting edges are helical, in order that the front face of the blades may be radial throughout their length. The cutter here shown is intended for heavy work, and, hence, the cutting edges are nicked.

44. An entirely different design of a plain milling cutter is shown in Fig. 6. This cutter belongs to the inserted-tooth type, and is a logical development of the idea of nicking the teeth, inasmuch as each separate tooth is the equivalent of the cutting edge between a pair of nicks of an inserted-blade cutter. The cutter consists of a cast-iron body *a* in which rows of cylindrical holes are drilled and reamed for the reception of the teeth. The holes are so arranged that a line drawn through the centers of the holes of each row and along the cylindrical surface of the cutter

forms a helix. The teeth *b*, *b* are cylindrical plugs of tool steel that are simply driven into the holes. A cutting edge is formed by cutting away one-half of that part of the plug that projects from the body, and grinding a proper clearance on its top. It will be observed that while the rows of teeth are in the direction of a helix, the cutting edge of each

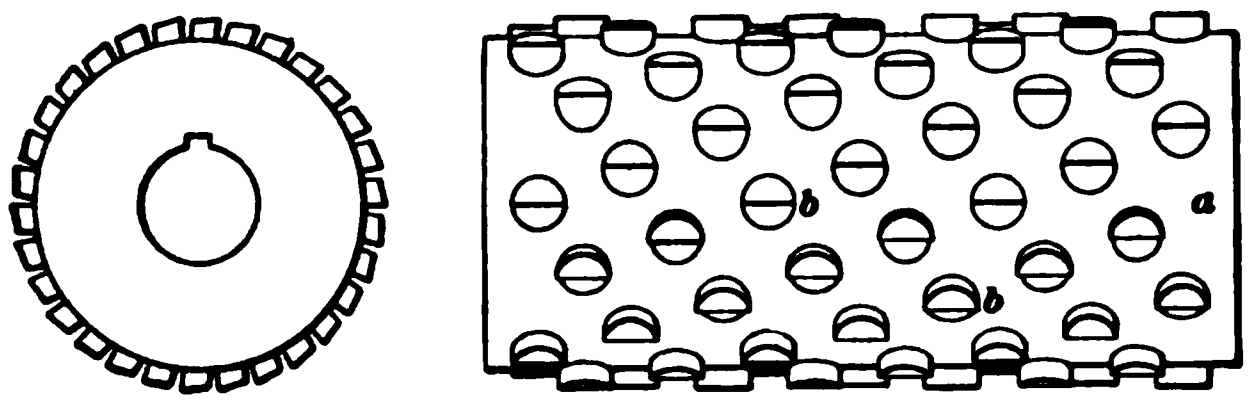

FIG. 6.

tooth is in a plane passing through the axis of the milling cutter. This is done purposely in order to prevent the teeth from turning around their own axis under the pressure of the cutting operation. If the front face of the tooth is helical, it will commence to cut at one corner; in consequence of this, there will be a tendency to rotate the tooth around its own axis.

45. Inserted-blade and inserted-tooth milling cutters are limited as to size only by the capacity of the machine. In connection with this it is to be observed that as far as results are concerned, the solid cutter will accomplish the same thing. For large cutters, however, either the cost of the solid cutter is such as to be prohibitive, or it is impossible to obtain steel of sufficient size to make a solid cutter. Furthermore, in hardening very large pieces of tool steel, there is considerable danger of losing them by cracking when they are quenched. It is thus seen that the question of whether to use a solid or an inserted-tooth cutter is simply a question of expense, since neither will produce work that cannot be done as well with the other. When it comes to a question of maintenance, the inserted-blade

and inserted-tooth cutter is undoubtedly cheaper in the long run, since new blades or teeth can be fitted at a fraction of the expense of a solid cutter, at least as far as large cutters are concerned.

SIDE MILLING CUTTERS.

46. Solid Side Mill.—The most common form of a side milling cutter for small work is shown in Fig. 7. By examining the illustration, it will be seen that it is a face milling cutter with additional teeth cut on its sides. In order that the sides may clear the work, they are recessed below the bottom of the teeth, as shown at *a*.

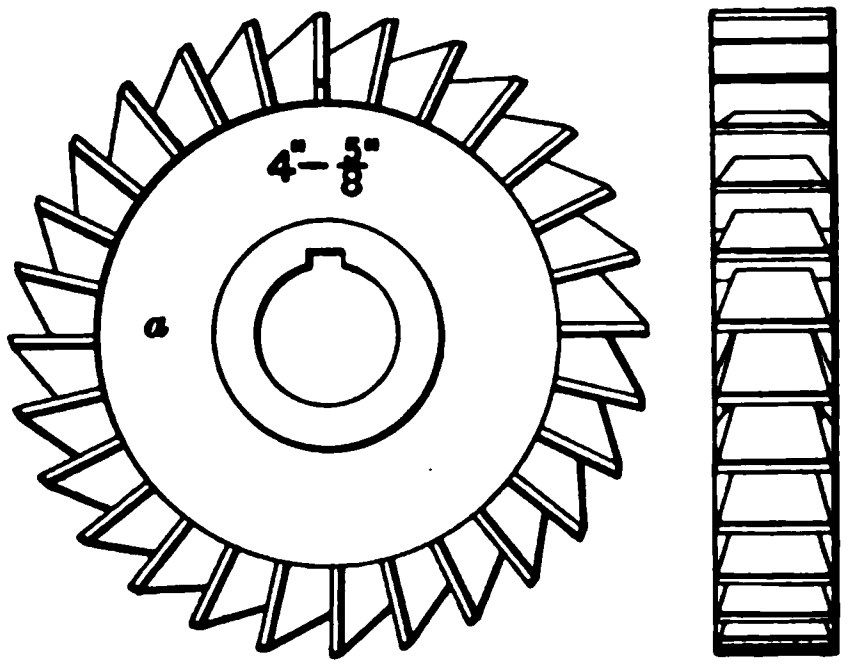

FIG. 7.

A side milling cutter may operate on the sides of work either by cutting with the cutting edges formed on its periphery or by cutting with the teeth formed on its sides, depending on which way the work is fed to the cutter. When the work is fed in a direction at right angles to the axis of rotation of the cutter, the teeth on the periphery will do the cutting and the side teeth will drag against the work; when the feeding is done in a direction parallel to the axis of rotation, the side teeth will do all the cutting.

47. Straddle and Gang Mills.—Two side milling cutters like the one shown in Art. **46** are often placed on an arbor, with a washer to regulate the distance between them. In this case two opposite sides of the work are operated on at once; such a combination is called a **straddle mill.**

A plain cutter may be placed between two side cutters; this combination will then be spoken of as a **gang mill,**

which term is usually applied to any cutter made up of several separate cutters. Gang mills are very useful for milling some simple shapes, if plain cutters of the required diameter are available, since several surfaces may be operated on at the same time. For intricate shapes, special milling cutters are often made as gang mills.

48. Threaded Cutters.—When any milling cutter is attached by screwing it to a shank or to the spindle, it is absolutely necessary to revolve the cutter in such a direction that the cutting operation will tend to lock it more firmly. From this it follows that any cutter attached by screwing is *not* reversible. For instance, consider a plain side milling cutter that is attached by a left-handed thread. Then, this cutter must only be attached so that it will run left-handed. Assume that it is run right-handed. Then, as soon as the cutter engages the work, the pressure of the cutting operation will tend to unscrew the cutter; in case the cutter is actually unscrewed, the work may be spoiled by the cutter digging into it, or the cutter may be broken. Particular attention is called to this fact, since a large percentage of the accidents to the work and cutters is due to its not having been taken into account. The foregoing may be summed up as follows:

If the thread is left-handed, the cutter must run left-handed; for a right-handed thread, the cutter must run right-handed.

49. It has been explained in Art. **32** what is meant by a right-handed and left-handed cutter; it will be well to refer again to this article, to make sure that the meaning of these terms when applied to milling cutters is properly understood.

50. Inserted-Blade Side Mills.—Small side milling cutters, say up to 8 inches in diameter, are usually made solid. Above that size the difficulty of making a solid cutter makes cutters with inserted blades or inserted teeth cheaper in first cost and maintenance. Inserted-blade side

milling cutters may be constructed in a great variety of ways; for instance, they may be made on the same principle as the plain milling cutter shown in Fig. 5, or the blades may be inserted and locked in the manner shown in Fig. 8. This figure shows the design adopted by the Pratt & Whitney Company. The blades *a*, *a* fit rectangular slots cut

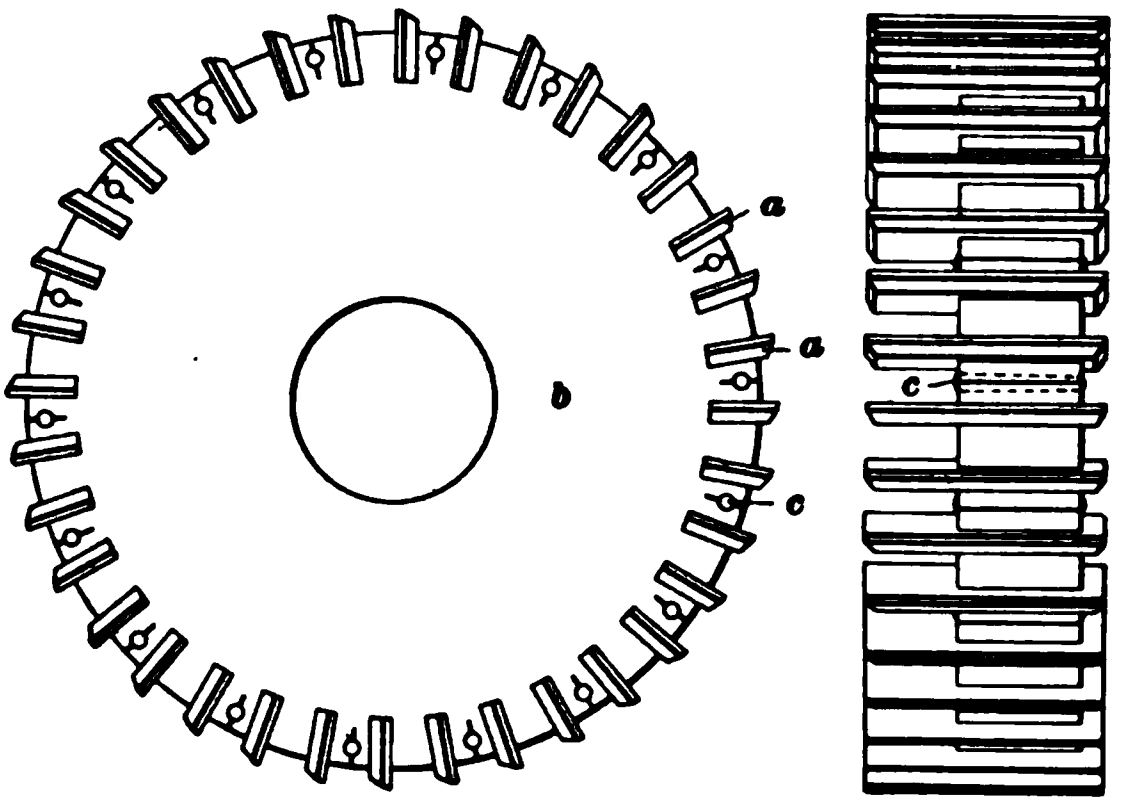

FIG. 8.

into the body *b*. A hole is drilled between every alternate pair of blades; these holes are reamed out tapering, to receive the taper locking pins *c*, *c*. After reaming, slots are cut through the reamed holes; the blades are then locked by driving the taper pins home. The blades are generally made long enough to allow them to be sharpened a great number of times.

51. Inserted-Tooth Side Mills.—The designs shown in Figs. 5 and 8 are used for cutters from 8 to 36 inches in diameter. Cutters exceeding the latter size are usually made with inserted teeth, although relatively small cutters are occasionally made that way on account of low first cost. There are various ways in which teeth may be inserted in side milling cutters. Probably the cheapest construction is to insert cylindrical teeth in the periphery of a cast-iron body, as shown in Fig. 9. The teeth *a*, *a* have their ends formed like planer roughing tools; the holes in

which they are placed are drilled at an angle of about 60° to the axis, in order that the cutting edges of the teeth may come in front of the side of the body. The teeth are held by setscrews *b*, *b*; owing to their simple shape, they can be made quite cheaply, and can be easily replaced.

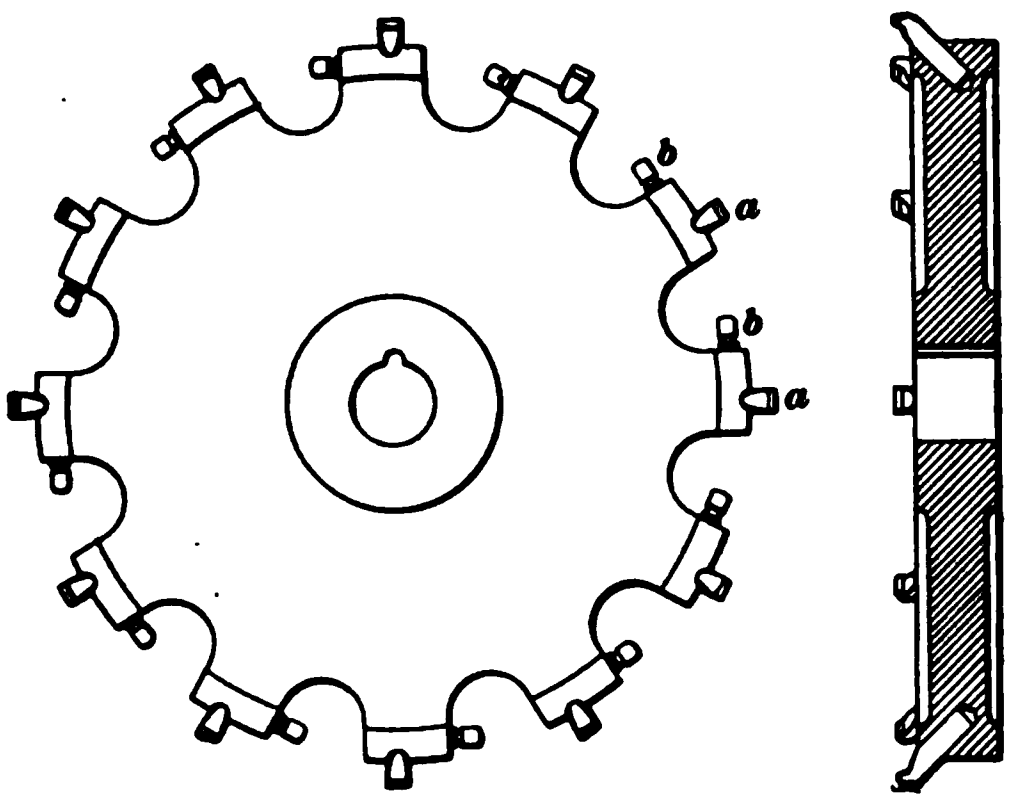

FIG. 9.

52. Fig. 10 shows a radically different construction. The teeth *a* are made of square tool steel and are placed in rectangular slots in the body *c*; these slots are parallel to the axis of the cutter. The teeth are held by setscrews *e*, *e*. The particular cutter shown is fastened to the spindle *d* by a key *f*; longitudinal movement on the spindle is prevented by a screw *g*, which is placed half into the shaft and half into the body. This method of fastening a cutter to the spindle is adapted only to cases where the cutter body is not intended to be replaced by others of different shape or size.

53. The particular design of cutter shown is a fine example of how, by the use of a properly designed tool, a surface may be roughed out and finished by running the cutter over it but once. Referring to the illustration, two flat-nosed tools *b*, *b* are seen so placed that their outer corner is slightly inside of the circle passing through the teeth. The cutting edges of these two tools are

adjusted in a plane slightly in front of that in which the cutting edges of the teeth are placed. In consequence of this, the teeth will rough out the work in advance of

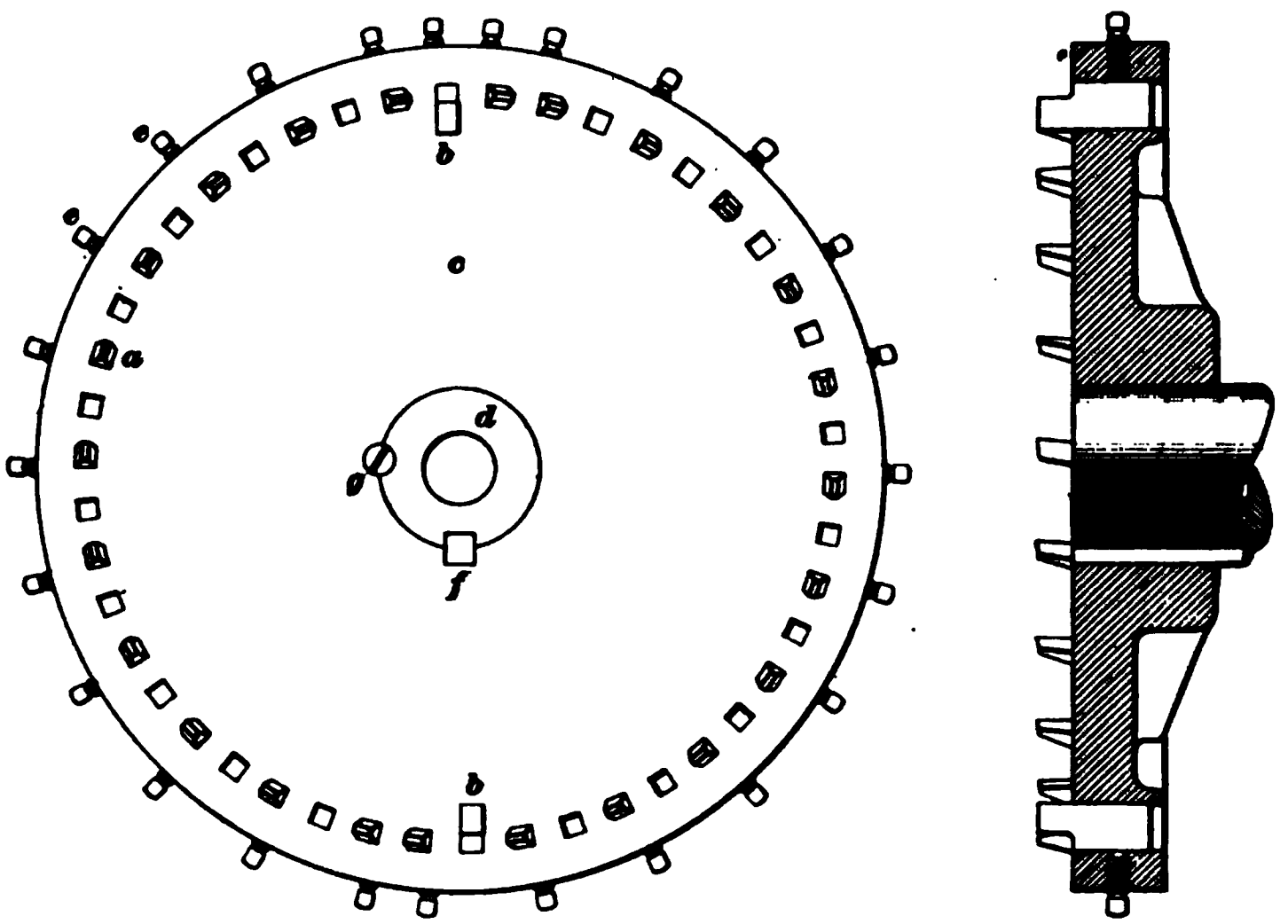

FIG. 10.

the tools *b*, and as the cutter moves past the work, the tools follow directly behind the teeth and take the finishing cut. This greatly reduces the time required for the cutting operation.

54. Cutters designed to take a roughing and a finishing cut at the same time are only applicable to work which is so rigid that there is no danger of its springing to an appreciable extent by the releasing of the tension existing at the surface of castings and forgings. Plain milling cutters cannot very readily be designed to take a roughing and a finishing cut at the same time.

55. Slotting Cutter.—The T-slot cutter shown in Fig. 11 is a combination of a side milling cutter and a face milling cutter, and is intended for cutting out T slots. This style of cutter is usually made solid, and has a shank *a* which is tapered to fit the hole of the milling-machine spindle.

The end of the shank is milled to form a tang that enters a corresponding recess in the bottom of the hole in the spindle, in order that the cutter may be positively driven.

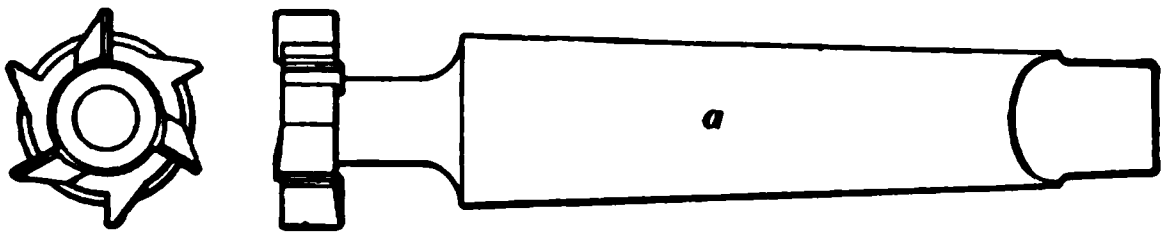

FIG. 11.

All shank cutters must be driven home quite heavily, using a lead hammer for this purpose; if this is not done, the vibrations due to the cutting operation will soon loosen the cutter and, in consequence, it will dig into the work.

ANGULAR MILLING CUTTERS.

56. Classification. — An **angular milling cutter** may be defined as a cutter intended for the finishing of surfaces at an angle to the axis of rotation. Angular cutters may be constructed in a great variety of ways and may be solid, or have inserted teeth, or inserted blades. They may be attached to the spindle by clamping them to an arbor, by screwing them to a shank, or by screwing them to the spindle. They may also be made solid and with a shank that is either tapered to fit the spindle or that is cylindrical; in the latter case, the shank is held in a chuck. Angular cutters may be divided into two general classes, which are *single-angle* and *double-angle* cutters.

57. Single-Angle Cutters.—A single-angle cutter is one in which one cutting face is at an inclination other than a right angle to the axis of rotation. Such cutters are known according to the angle included between the inclined face and a plane perpendicular to the axis, as 30° cutters, 45° cutters, etc. Angular cutters of the single-angle class are largely used for cutting the teeth of milling cutters, counterbores, hollow mills, and similar work having straight cutting edges.

58. A single-angle 60° cutter is shown in Fig. 12. As shown in the illustration, it has teeth cut on its side, as well as on the angular face. Such a cutter can operate on two surfaces at the same time; that is, it can cut on a surface perpendicular to the axis of rotation and also on a surface at an inclination to it. Single-angle cutters intended only for finishing a surface at an inclination to the axis are made without teeth on the side; such a cutter is considerably cheaper than the one shown in Fig. 12.

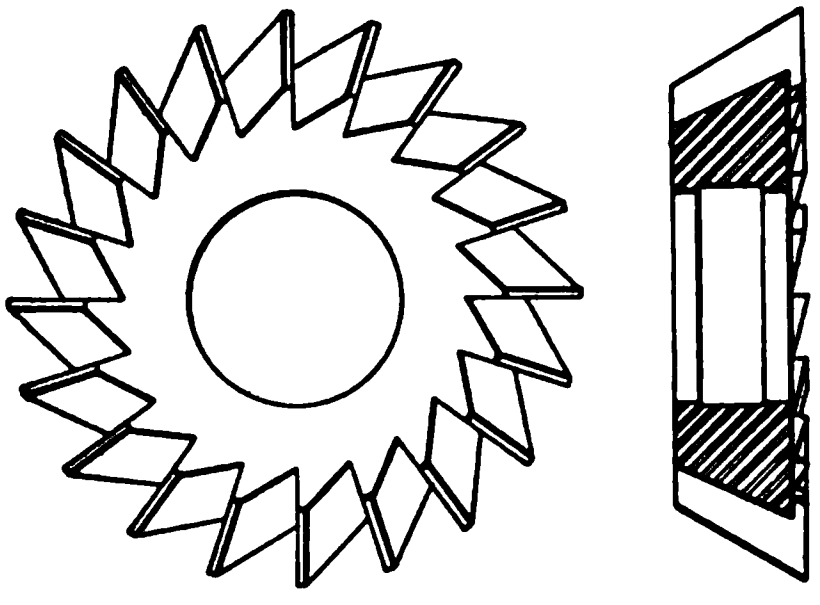

FIG. 12.

59. Double-Angle Cutters.—A double-angle cutter has two cutting faces at an angle with each other and the axis. When both faces make the *same* angle with the axis, the cutter is designated by giving the angle included between the two cutting faces. For instance, if the angle is 60°, the cutter would be called a "60° double-angle cutter."

60. When the two cutting faces do not make the same angle with the axis, as, for instance, in the cutter shown in Fig. 13, the cutter is designated by giving the angle included between each face and a plane perpendicular to the axis, as the angles *a* and *b* in the figure. For instance, if the angle *a* is 12° and the angle *b* 48°, the cutter would be designated as a "12° and 48° double-angle cutter."

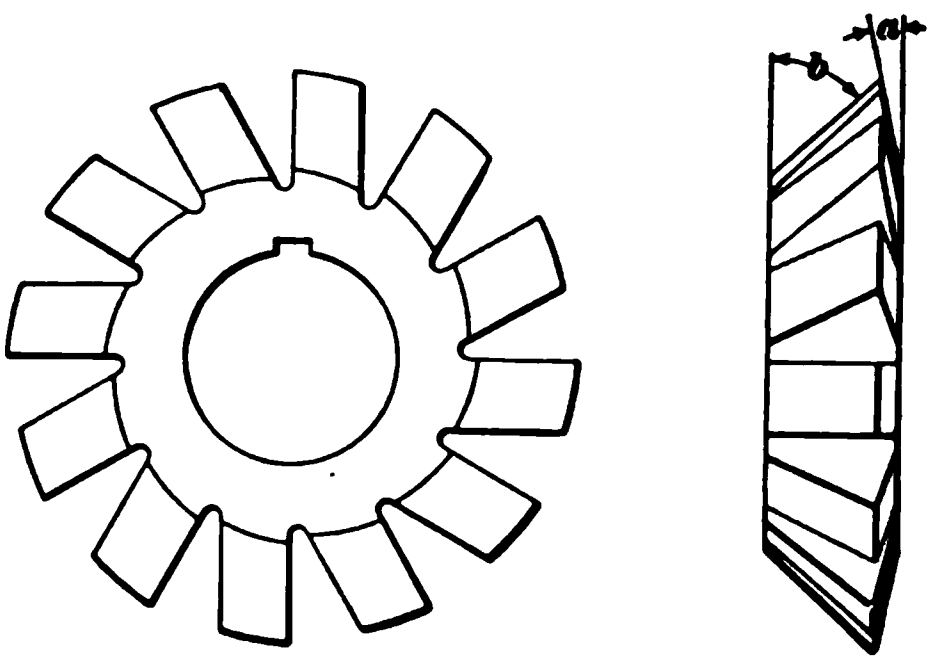

FIG. 13.

Double-angle cutters are most commonly used for fluting taps, reamers, milling cutters with helical teeth, and similar work where it is important that the two surfaces operated on at the same time be finished equally well.

61. It must not be inferred that a surface at an angle to another one cannot be finished except with an angular cutter. In many cases, the work may be chucked in such a manner that a plain milling cutter or a side milling cutter may be used, and in other cases, the axis of rotation of the cutter is adjustable, which allows a plain cutter or side mill to be used for angular cuts.

END MILLING CUTTERS.

62. Stem Mills.—In its true sense, an end milling cutter is one in which the cutting is done by the teeth on its end. In practice, however, the term is usually applied to shank cutters, often called **stem mills,** which have teeth on the periphery as well as on the ends, as, for instance, the cutter shown in Fig. 14. By examining the cutter illustrated, it will be seen that it is a combination of a plain milling cutter and a side milling cutter, and can be used for

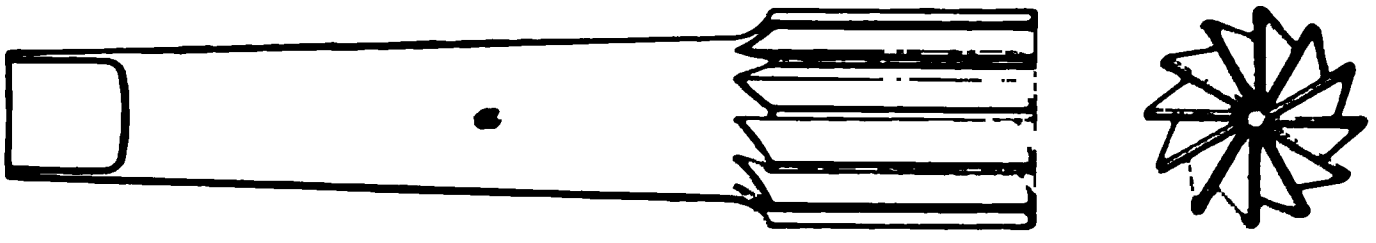

FIG. 14.

milling surfaces that are parallel, and also for surfaces perpendicular, to the axis of the cutter. When the work is fed to the cutter in a direction parallel to the axis of the latter, the teeth on the end will do the cutting, and the cutter will act as a true end mill. In most cases, however, the work is fed in a direction perpendicular to the axis of the cutter, and the cutter will operate in the same manner as a side mill. The larger sizes of end mills are made as shell mills: that is, they are in the form of a shell that is fastened to an arbor.

Smaller sizes are made with a taper shank *a*, as shown in Fig. 14, and are driven into a tapering hole in the milling-machine spindle. The smallest sizes are made with a cylindrical shank, or **stem,** and are held in a self-centering chuck. While the end mill shown in Fig. 14 has straight cutting edges, it is often made with helical edges on the periphery. The teeth on the end are almost invariably radial.

63. Cotter Mill.—Fig. 15 shows a peculiarly shaped mill that is usually considered as an end mill, although it is not very well adapted for cutting with its end. This mill is known as a **cotter mill,** and is in reality a face cutter with two teeth opposite each other. It is particularly adapted

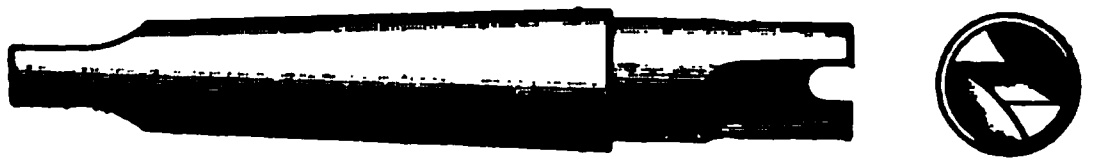

FIG. 15.

for cutting narrow and deep grooves; it cannot be sunk endwise into solid metal to any extent, but a hole must be drilled where the groove is to start. The cutting is done by the edges on the periphery. As there is considerable room for the chips, the cutter will not clog very easily.

FORM MILLING CUTTERS.

64. Classification.—Any milling cutter intended for the milling of surfaces that are not plain surfaces may be called a **form milling cutter.** Such cutters may be divided into two general classes, viz.: *form cutters* and *formed cutters.* Both classes will accomplish the same result; they differ from each other only in their construction.

The name **form cutter** is usually applied to any form milling cutter that has the teeth constructed in the same manner as the ordinary milling cutter. Form cutters can rarely be sharpened without changing their profile to some extent.

Formed cutters are milling cutters that have been made with a forming tool applied in such a manner that the sharpening of the teeth will not change the profile.

Form milling cutters may have any one of an infinite variety of profiles and may be made solid or several cutters may be combined into a gang mill.

65. Fly Cutter.—The simplest form milling cutter is the so-called **fly cutter,** which is shown in its arbor in Fig. 16. The cutter *a* is set into a rectangular slot in the arbor *b*, and is locked by tightening the two setscrews *c*, *c*. The front face is radial; one end of the cutter is filed or turned to the profile it is desired to cut. It is seen that the fly cutter is simply a one-tooth milling cutter. Clearance is given by setting the cutter farther out from the center than the position in which it was turned. The fly cutter has the

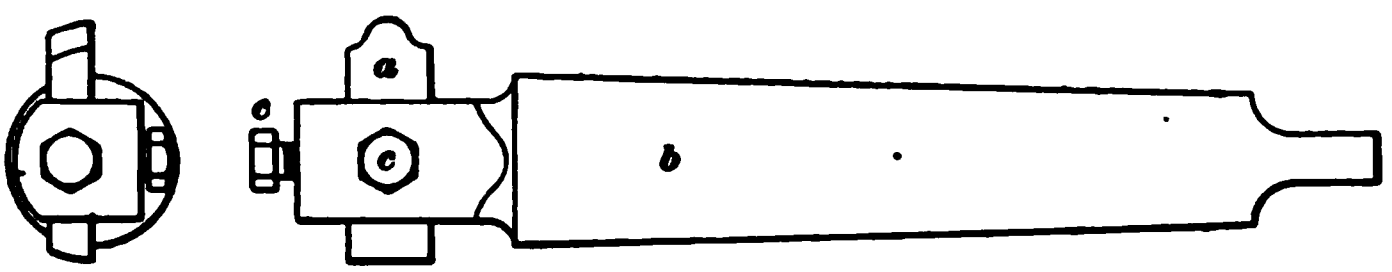

FIG. 16.

advantage of being very cheap in first cost, even when the profile is quite intricate; for this reason it is well adapted for such work as the making of forming tools for screw machines, making a gear with an odd pitch of teeth, and similar work that does not warrant the expense of a regular form cutter. Since the cutter has only one cutting edge, it cannot be expected to last as well or cut as fast as a regular cutter; it will reproduce its own shape very exactly, however, and will mill quite smoothly if kept sharp.

66. Interlocking of Teeth.—Fig. 17 shows a form cutter that is built up of three pieces, thus forming a gang cutter. In order that the cutter will not make a mark where the pieces join, the teeth are made to interlock, as shown at *a*, *a*. By examining the cutter, the similarity of its

teeth to those of the ordinary milling cutter will be noticed. The difficulty of sharpening the teeth without changing the profile of the cutter is apparent.

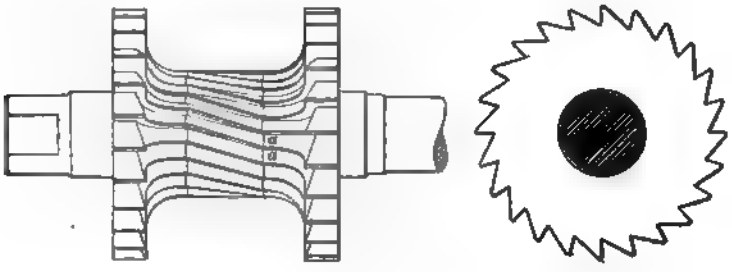

FIG. 17.

67. Gear-Tooth Cutter.—The most familiar formed cutter is the gear milling cutter shown in Fig. 18, which is used for cutting the teeth of gear-wheels. This cutter, as are all formed cutters, is sharpened by grinding the front face of the teeth. If the precaution of grinding the front

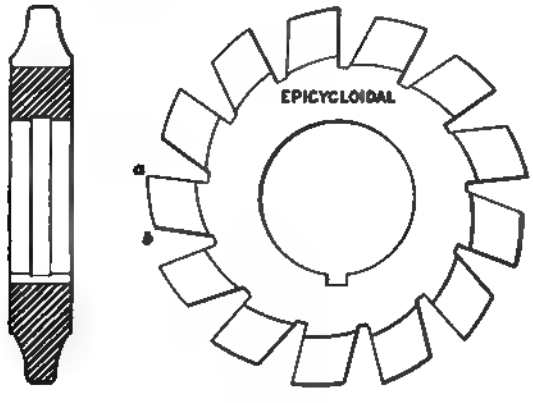

FIG. 18.

faces radially is observed, the profile will not change at all, since the method by which it is made insures that the profile of all sections taken through a tooth in planes passing through the axis is exactly the same. The tooth *a b*, Fig. 18, of a formed cutter may be conceived to be built

up of an infinite number of thin wedge-shaped plates with radial faces, each of which is placed slightly nearer the axis of the cutter than the one in front of it. In this manner, the back of the tooth is made to clear the front, which forms the cutting edge. Sharpening the tooth may be likened to the removal of one or more of the plates of which the real tooth was conceived to be composed, thus leaving plates that have not worn in readiness to cut.

68. Formed Gang Cutters.—Formed cutters may be made for an endless variety of profiles; Fig. 19 will serve as a suggestion of what can be done. In many cases, formed cutters may be combined with ordinary cutters or

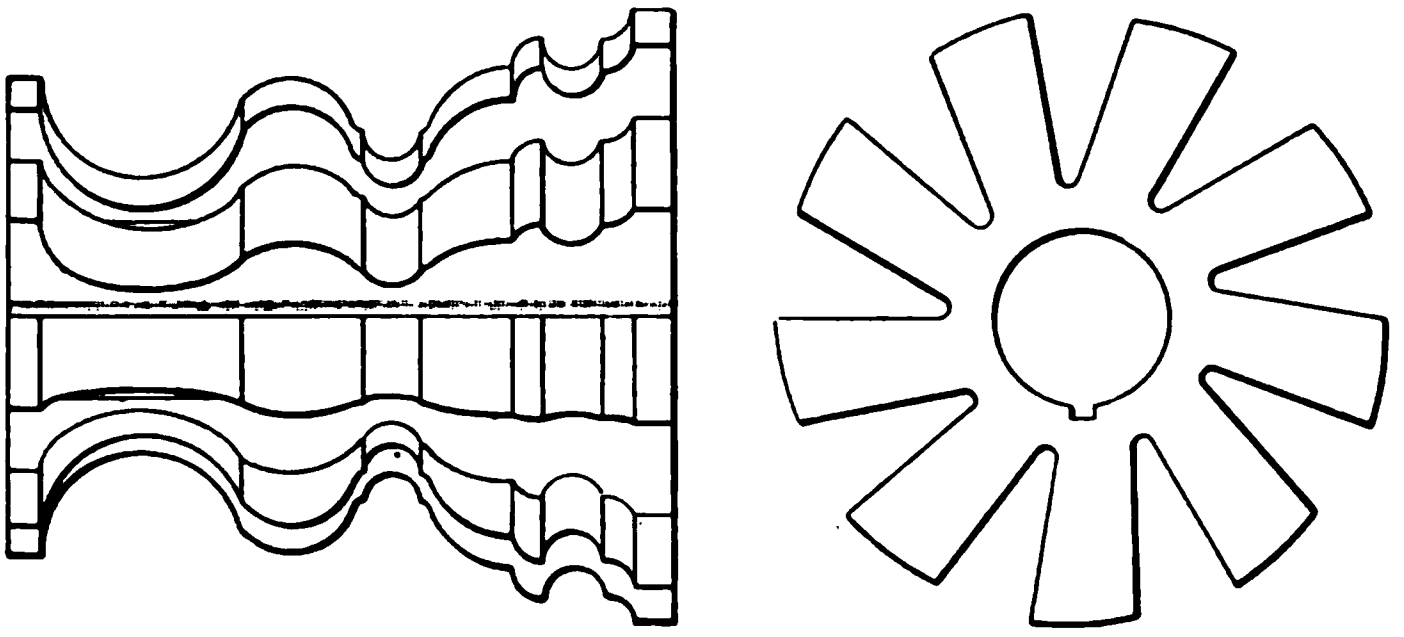

FIG. 19.

with form cutters; the several cutters when assembled together will form a gang mill. Formed cutters cannot be made without a special forming machine or device; for this reason they are usually bought of manufacturers that make a specialty of them.

69. In practice, a vast variety of milling-machine cutters will be found that at first will appear unlike any that have been illustrated here. When they are analyzed, however, they will invariably be found to belong to one of the several classes enumerated; in many cases the distinctive features of several classes may be combined in a cutter.

CARE OF MILLING CUTTERS.

KEEPING CUTTERS SHARP.

70. In order that a milling cutter may work to the best advantage, it is absolutely essential that it be kept *sharp*, and that all cutting edges be at the same distance from the *axis of rotation* of the cutter. It is not sufficient that the cutting edges be at the same distance from the axis of the cutter, for if a true cutter is mounted on an arbor that is eccentric, i. e., runs out of true, the cutting edges will *not* be at the same distance from the axis of rotation. In consequence of this, some edges will have to do more work than others; experience has shown that if this is the case, the cutter can neither be pushed to the full limit of its capacity nor can it produce as smooth work as one ground true in respect to its axis of rotation. This fact is becoming more generally realized, as evidenced by the increasing practice of grinding cutters while in place in the milling machine.

EFFECT OF DULLNESS.

71. Milling cutters cannot be ground true enough by hand to allow the machines to be worked to the best advantage. A cutter-grinding machine is an essential adjunct of the milling machine, and without it the milling machine is at a serious disadvantage. A dull cutter is distinctly a bad cutter; it should never be used in that condition, but should be sharpened as soon as it shows signs of becoming dull. A dull cutter will do poor work, will require more power to drive it, and will wear out faster than one that is kept sharp. The extra power required to drive a dull cutter is transformed by friction into heat; this heat tends to soften the cutting edges and thus tends to make them wear faster. In formed cutters there is, in addition, a wearing of the formed surfaces that will shorten the life of a cutter more than many sharpenings.

72. As an example of what work can be done by a cutter that is kept sharp, the Brown & Sharpe Manufacturing Company state that the worn-out gear-cutter shown in Fig. 20, which is 3½ inches in diameter, has cut 467 cast-iron gears, having a face 3 inches wide, with 64 teeth of 4 diametral pitch. This makes a total length of cut of 7,472 feet. The teeth were cut from the solid blank and finished in one cut. This performance, while good, is by no means exceptional.

FIG. 20.

HOLDING CUTTERS.

ARBORS.

73. Construction of Arbor.—The ideal method of driving the cutter is to make it a part of the spindle, and this is done to some extent in milling machines designed especially for side milling. In milling machines intended for general work, the cutter must be so made that it can be easily removed, which condition precludes making it a part of the spindle.

74. Cutters are most commonly clamped to an **arbor,** which in turn is fitted to the spindle and forced to rotate with it. A common design of an arbor is shown in Fig. 21. It has a taper shank *a*, which fits a corresponding hole bored in the spindle. The rear end of the shank is flattened to form the tang *f*, which enters a corresponding slot at the bottom of the tapered hole in the spindle, and which

is expected to drive the arbor in a positive manner. The part of the arbor that projects from the spindle is made cylindrical; a nut is placed on the end of the arbor for the purpose of clamping the cutter, which is placed between

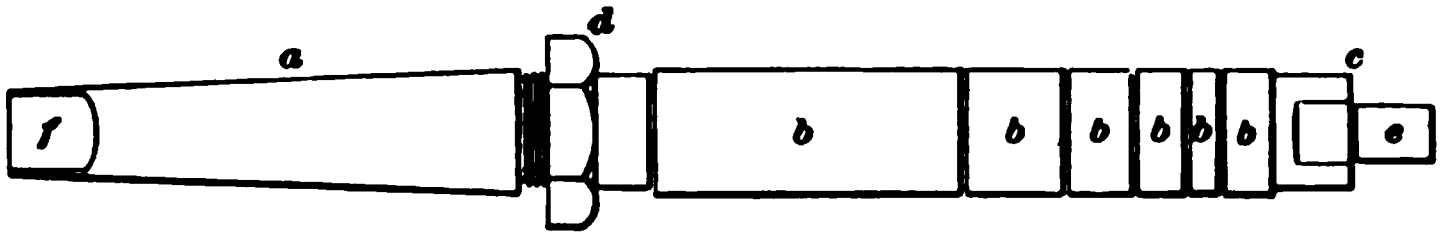

FIG. 21.

removable washers, as *b*, *b*. These washers are made of different lengths in order to accommodate different widths of cutters, and also to allow the cutter to be placed in different positions along the arbor without the necessity of having a very large number of washers.

75. Methods of Removing Arbors.—The particular design of arbor shown is provided with a nut directly in front of the shank. This nut when screwed against the front end of the spindle will cause the arbor to be withdrawn from the spindle. More commonly, however, the arbor is loosened by driving a tapered key behind the shank; in some cases the spindle is made hollow and the arbor is then punched out with a rod.

76. Supporting Arbors.—The front end of the arbor usually has a countersunk center to allow a dead center to be used for supporting it. Occasionally, a cylindrical teat *c*, Fig. 21, is formed at the front end; this teat is fitted to a bushing held in the outboard bearing and serves to support the arbor. When the machine has no outboard bearing, the cutter should invariably be placed just as close to the spindle as circumstances permit, since an arbor is comparatively slender and will spring considerably even under a moderate cut. When no way of steadying the end of the arbor is available, then in cases where the cutter must be placed near the end, the finishing must be done by light cuts in order to keep the spring of the arbor within reasonable limits.

77. Driving the Cutter.—In many cases the cutter is driven simply by the friction between the sides of the washers and the sides of the cutter; this friction is created by screwing up the nut on the end of the arbor. When the cutter slips in spite of repeated tightening, it may often be made to hold by placing washers made from ordinary writing paper between the metallic washers and the cutter. Thin brass or copper washers will also be found useful for this purpose.

For heavy cutting, the cutter should be driven by a key; a good many arbors have a semicircular groove cut along the cylindrical part to take a round key, which may be made by cutting off a piece of drill rod to the right length. A corresponding semicircular keyway is cut in the bore of the cutters. In some cases, the driving is done by a regular rectangular feather; the arbor is then splined.

78. Precautions to be Taken With Arbors.—When the end of the arbor is supported either by a bushing or by a dead center, there is no chance for the arbor to become loose in the spindle, provided the supports are properly adjusted. When the end of the arbor is free, however, it must be driven home in the spindle quite hard, or it will come loose under the vibrations due to the cutting operation. Before inserting the arbor, the hole in the spindle should be thoroughly cleaned of any chips that may have gotten into it, and it should also be free from grease or oil. The shank of the arbor must then be cleaned off just as carefully, and inserted so that the tang enters the corresponding slot in the spindle. It should be driven home by a fair, quick blow with a heavy lead hammer. In nine cases out of ten, the coming loose of the arbor, which is here assumed to have been properly fitted, is due to oil or grease on the shank and in the spindle. Hence, if the arbor persists in coming loose, again clean the shank and spindle thoroughly. In some cases, the shoulders of the tang may strike the bottom of the hole in the spindle; this can easily be discovered by examining the tang. If they do, the arbor

cannot be driven home properly, in which case the tang should be ground off where it *bottoms*. Chips or dirt between the collars may bow the arbor and cause it to run out.

79. Arbors of the form shown in Fig. 21 are made with right-hand and left-hand nuts, and the cutter used on the arbor should always have a direction of rotation to suit the direction of the thread. That is, select a cutter that runs in such a direction that when slipping occurs, the tendency will be to *tighten* the nut. Hence, for a left-hand thread on the arbor, the cutter should be left-handed. If the thread is right-handed, use a cutter that must run right-handed.

80. Shell-Mill Arbor.—Small side mills and end mills are often so made as to be held in a manner similar to that in which a shell reamer is held; the shell-mill arbor shown in Fig. 22 (*a*) is then used. This arbor has a taper shank to fit either the milling-machine spindle or a collet fitted to

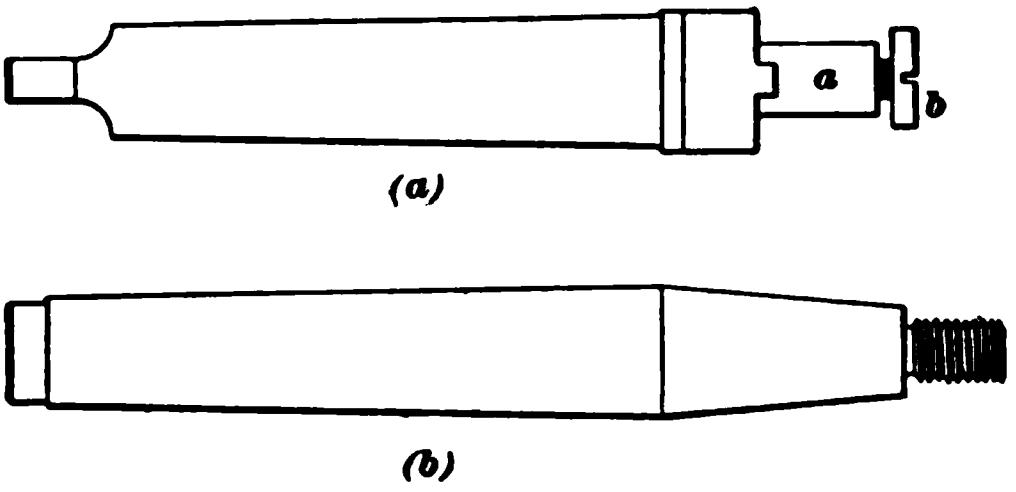

FIG. 22.

the spindle. The shoulder at the end of the cylindrical part *a*, which forms the seat for the cutter, has two projections that enter corresponding slots in the cutter and insure positive driving. The cutter is confined lengthwise by the head of the screw *b*, which enters a recess in the cutter, thus bringing the head below the face of the cutter; this is necessary for end milling and some kinds of side milling.

81. Screw Arbor.—Small cutters are often made with a threaded hole and are screwed to a screw arbor made as shown in Fig. 22 (*b*). The direction of rotation of the

cutter that can be used with a shell-mill arbor and screw arbor is determined by the direction of the thread of the screw *b*, Fig. 22 (*a*), or the screw at the end of the screw arbor. That is, for a left-handed thread use a left-handed cutter; for a right-handed thread use a right-handed cutter.

82. Effect of Vibration.—While it is admitted that in an arbor driving a cutter by positive means, as by a key, or by projections on the shoulder, there is no danger of the nut unscrewing by a slipping of the cutter, experience has shown that the vibrations due to the cutting operation tend to unscrew the nut, or the screw *b*, Fig. 22 (*a*), unless its thread is in accordance with the statement made in Art. **81.** If no cutter having the proper direction of rotation is available, the nut or screw must be screwed home as firmly as circumstances will permit, and the chance of the cutter working loose must be taken.

Shell-mill arbors and screw arbors are liable to become loose for the same reasons as the ordinary arbor; the same precautions should be used that were explained in Art. **78.**

83. Arbor for Use Between Centers.—Fig. 23 shows how a milling arbor may be made if the cutter is to be driven between centers, as occurs when a lathe is temporarily converted into a milling machine. The arbor is

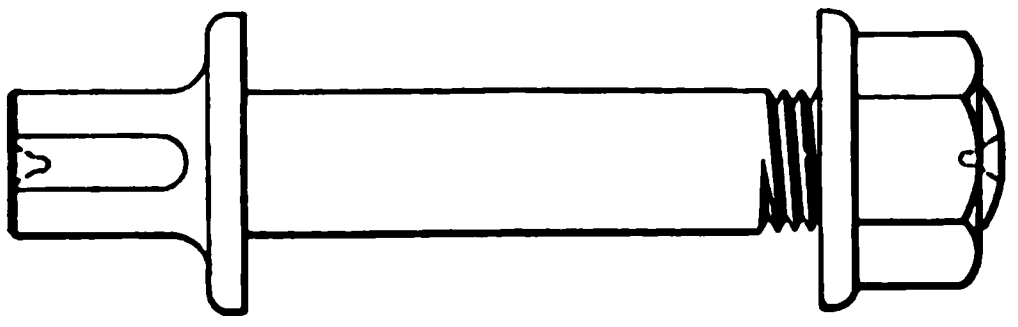

FIG. 23.

driven by a dog, the tail of which engages with the face plate. Such an arbor may occasionally be used for a regular milling machine having an outboard bearing; a live center must then be placed in the milling-machine spindle and suitable arrangements made for driving the arbor.

COLLETS.

84. Plain Collet.—A **collet** is a socket used for bushing down the hole in the milling-machine spindle so that smaller arbors or shanks can be held. Fig. 24 (*a*) shows how such collets are usually made. The outside fits the milling-machine spindle; the inside is bored out true with

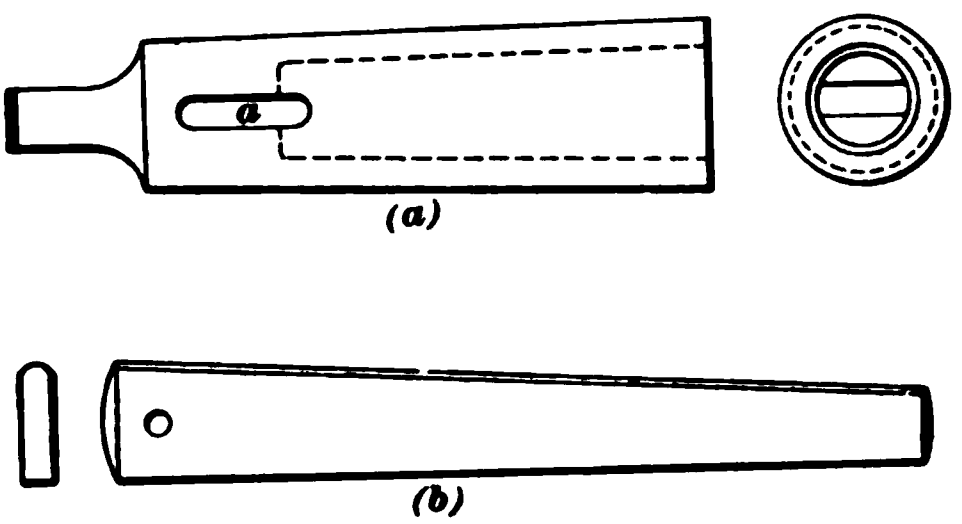

FIG. 24.

the outside, so that an arbor inserted in the collet will run true when the collet is in the machine. The tang of the arbor or of the cutter shank projects into the slot *a*; the arbor can be removed from the collet by driving a taper key into the slot behind the tang.

85. With constant use, a collet will enlarge somewhat inside, so that the shank of the arbor or cutter will finally bottom. A thin piece of writing paper may then be wrapped around the shank; the paper must not be so wide as to lap, however. While this is a makeshift at best, it is one that will often prove very handy. The same thing may be done when the cutter shank or arbor does not bottom in the hole, but has its tang projecting so far into the slot *a* that it will not be possible to get a key in to drive the shank out after it is driven home. The key is usually made as shown in Fig. 24 (*b*); a hole is drilled near the large end so that a chain can be attached to it and to some stationary part of the machine. This insures finding the key when it is wanted.

86. Chuck Collet.—Small cutters are often made with a cylindrical shank, and very small cutters are made from drill rod. Such cutters may be held by means of the **chuck collet** shown in Fig. 25. The front end of the collet is bored out cylindrically, and so that the axis of the cylindrical hole coincides with the axis of the shank *a*. A nut *b* having a plain tapered part is fitted to the front end, which latter has been split into three parts. By reason of the front end being tapered on the outside, the screwing up of the nut *b* will close the split part on the shank of the cutter, thus holding it centrally and firmly.

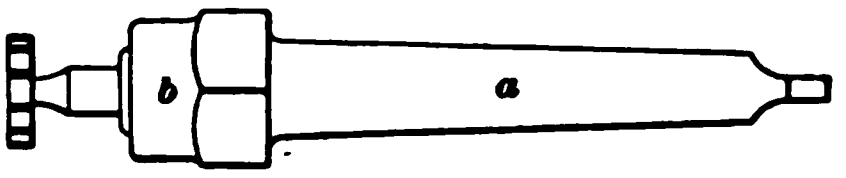

FIG. 25.

87. The chuck collet shown is open to one objection, which is that all cutters to be used with it must have the same diameter of shank. If a chuck collet is intended to take straight shanks of varying diameter, a high grade drill chuck of the Almond or Beach type may be attached to a shank fitting the milling-machine spindle.

CHUCKS AND FACE PLATES.

88. Self-centering lathe chucks may often be fitted to the spindle for holding cutters having larger shanks than the drill chuck will receive. For some work a single-tooth cutter may be mounted in a slot of a face plate fitted to the spindle. Such a construction does not differ essentially from that of a fly cutter, being simply a fly cutter on a larger scale. A cutter attached to a face plate will be found of great service in finishing a surface to a circular profile having a given radius. While this can be done to the best advantage with a regular milling cutter made especially to the required radius, the fact remains that in many cases the expense of making such a cutter is not

warranted by the conditions, and a face-plate cutter will then prove an excellent inexpensive substitute.

89. Fig. 26 shows the general idea of a face-plate cutter; its similarity to the fly cutter will be apparent. Referring to the figure, the face plate *a* is seen to be threaded so as to screw on the spindle. The cutter *c* is adjustable in

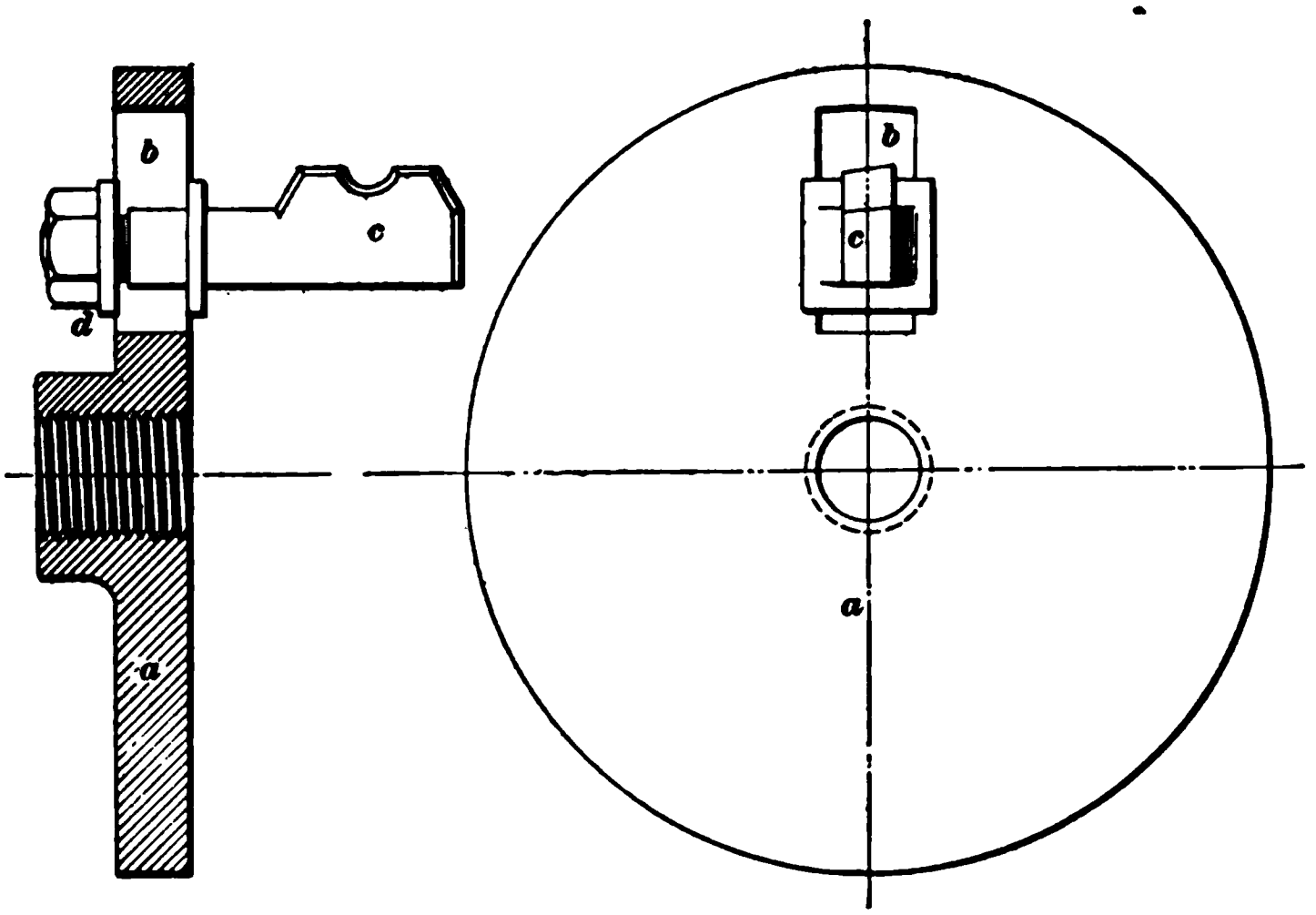

FIG. 26.

the slot *b*, and can be clamped by tightening the nut *d*. The shank of the cutter should have a rectangular cross-section so that the cutter will not turn in the slot.

90. If a circular milling cutter of the right profile, but of smaller diameter, is available, the expense of making a single-tooth cutter can often be saved by clamping the regular cutter to the face plate, passing the clamping bolt through the slot in the face plate. The cutter is then placed with one of its cutting edges in the position occupied by the cutting edge of the fly cutter shown in the illustration, and after adjusting it to the required radius, it is clamped. Any ordinary bolt may be used for clamping. The setting of the cutter so as to mill a given radius is not

a particularly difficult matter. The cutting edge must be set at a distance from the periphery equal to the difference in the required radius and the radius of the face plate. When the cutter projects considerably from the face of the face plate, the blade of a try square may be placed on the cutting edge and the stock held against the face plate; the distance from the edge of the blade to the periphery may then be measured with a steel rule.

When a regular milling cutter is used as a fly cutter, it is advisable to drive a dowel-pin into the face plate in such a position that it will come between two teeth, and thus prevent rotation under the pressure of the cutting operation.

PREPARATION OF STOCK.

91. The term **stock,** when used in connection with a milling operation, refers to the work in its rough condition. The success of the milling operation depends to a large extent on the condition in which the stock reaches the milling machine. If the stock is hard, either in spots or all over, as is the case with unannealed tool steel and often with forgings, or if the stock has a hard skin, as is usually the case with iron castings and steel castings, the hardness will cause the cutter to dull rapidly, which prevents the machine being worked to the best advantage.

92. In some cases, the stock is as soft as it can be rendered; no further preparation is then feasible or necessary. In other cases, the stock can readily be softened and thus be put into a better condition for milling. The softening may consist of a removal of hard scale by pickling and rattling, or uniform softening by annealing, or maybe a combination of these methods.

93. Iron and steel castings, when they leave the mold, usually have a hard, glossy skin, or **scale,** as it is called, in which sand is frequently embedded. This scale, when the size of the casting allows it, can be pretty thoroughly

removed by rattling the castings in a foundry *rattler*, or *tumbler*, as some call it. Castings of a size and shape that prohibit tumbling may have the scale softened so that it will crumble easily by **pickling.** This is done by placing the castings for from 10 to 15 minutes into an acid bath composed of 1 part of sulphuric acid to 25 parts of boiling water. After pickling, the castings must be thoroughly washed in clean boiling water in order to remove all traces of the acid, which would cause them to rust very rapidly. A hard scale is often found on forgings. This may also be removed by rattling or pickling.

94. When castings or forgings are found too hard to mill easily, even after the scale has been removed, they may be annealed by heating them very slowly to a dull-red heat, and allowing them to cool gradually. The annealing will have the further advantage of releasing, to a large extent, the internal stresses that have been set up in forging or casting. This reduces the extent to which the shape of the work will change after machining.

CUTTING SPEEDS AND FEEDS.

CUTTING SPEEDS.

95. Owing to the large variety of work that may be done by milling, no hard and fast rules in regard to proper cutting speed and feed per tooth can be given as applicable to all cases. When much work of the same kind is to be done, it is well to experiment a little, starting in with a feed and speed that judgment indicates to be conservative, and varying both gradually until the maximum production at the minimum expense per piece has been obtained.

96. The cutting speed depends on several factors, one of which is the character of the material to be milled, i. e., its resistance to being severed by the milling cutter. It

may be stated as a general rule that the harder the material the slower the cutting speed must be. Thus, unannealed tool steel calls for a low cutting speed, while soft brass castings can be advantageously milled at a much higher speed. In order to aid the milling-machine operator in judging about where to commence to experiment, the average cutting speeds for different materials are here given.

A peripheral (surface) speed of 15 feet per minute can rarely be exceeded in unannealed tool steel. If well annealed, the speed may be increased to 25 feet per minute. Wrought iron, soft machinery steel, and hard white-iron castings can be successfully machined at a speed of from 30 to 40 feet per minute. Medium-hard iron castings, phosphor bronze, tobin bronze, aluminum bronze, and similar very tough copper alloys may stand a cutting speed of 50 feet per minute, which can be increased to 60 feet for common, soft gray-iron castings, soft steel castings, and malleable-iron castings. Red-brass castings, more commonly but wrongly designated as gun-metal castings, will stand a cutting speed of 80 feet per minute; this can be easily increased to 100 feet for yellow brass.

97. Another factor that enters into the selection of a proper cutting speed is the presence or absence of provision for carrying away the heat generated in the cutting operation. This heat may be carried away by flooding the work and cutter with oil or soda water during the milling operation; when this is done while a sharp cutter is used, the cutting speed may be as much as 50 per cent. in excess of that possible in dry milling.

98. A sharp cutter will easily stand a higher cutting speed than a dull one; in this respect a milling cutter is analogous to a lathe tool. It may be stated that the duller the cutter the more heat will be generated per revolution; hence in order to give a chance for this heat to dissipate into the work and surrounding atmosphere so that the cutting edges will not become overheated, the revolutions per minute must be lowered.

FEEDS.

99. The rate of feed depends on the pitch of the teeth, the provision made for clearing out the chips, the rigidity of the work and machine, the manner in which the work is held, and the degree of finish desired.

When milling cutters were first made, they were constructed with teeth having a very fine pitch. Experience quickly showed that the chips would clog up the spaces between the teeth, packing in so closely that the cutter would refuse to cut at all except when a very fine feed was employed. Such cutters, instead of cutting, really nibbled away little crumbs of metal, as it might be expressed for want of a better term. It became gradually understood that by making the pitch of the teeth coarser, a distinct chip could be taken, whose size, so far as the cutter was concerned, was limited only by the size of the space between the teeth and the provision made for clearing out this space. From this the conclusion may be drawn that, other conditions permitting, the rate of feed per tooth can be greater as the pitch of the teeth is made larger. The rate of feed obviously must never be so large as to break the tooth.

100. The rigidity of the work, that is, its resistance to a change of form under the pressure of the cutting operation, exercises a powerful influence over the rate of feed. Therefore, if the work will spring easily, a fine feed must be employed; when it is very rigid the feed can be increased up to the limit. Likewise, if the work is substantially held, a coarser feed is permissible than when it is lightly held.

As stated in Art. **99,** the permissible feed is influenced largely by the space available between the teeth for the reception of the chip. Evidently, this space can be filled either by a heavy and short chip or a fine and long chip of equal volume. From this the conclusion may be drawn that for a shallow roughing cut the feed may be coarse, and that increasing the depth of the cut requires a decrease of the feed.

101. The degree of finish desired largely influences the choice of feed. As a general rule, it may be stated that for roughing out, a relatively low cutting speed and a heavy feed will be found advantageous, while for finishing, a higher cutting speed and fine feed is needed. The only exception is in the case of side milling with inserted-tooth or inserted-blade cutters. Here a wide, flat-nosed cutting edge can be used, and, consequently, a very wide feed is permissible.

Another point that must be taken into consideration when experimenting for a proper feed and cutting speed for a particular job, is the difficulty of resetting some forms of gang cutters after sharpening so that they will cut exactly the same shape as before. In such cases, it will occasionally prove more economical to use a slower speed and lighter feed in order to make the cutter last longer and thus save the time required for resetting it after it has been sharpened.

102. The peripheral speed (the cutting speed) of a milling cutter can readily be found in feet per minute by multiplying its diameter, in inches, by 3.1416 and by the number of revolutions per minute, and dividing the product by 12. The revolutions per minute can be obtained by using a speed indicator, which is an instrument made for this purpose.

EXAMPLE.—A cutter 3 inches in diameter makes 120 revolutions per minute. What is its cutting speed in feet per minute?

SOLUTION.—Applying the rule given in Art. **102**, we get

$$\frac{3 \times 3.1416 \times 120}{12} = 94.25 \text{ feet.} \quad \text{Ans.}$$

103. Tables I and II were calculated by Mr. C. C. Stutz and first published in "Machinery." These tables are very useful for finding the cutting speeds of milling cutters when the diameter of the cutter and the number of revolutions per minute are known. Likewise, if a cutting speed has been selected and the diameter of the cutter is known, the number of revolutions it must make per minute

can be taken directly from the table. These tables are applicable to lathe work as well, by considering the diameter of the work instead of the diameter of the milling cutter.

104. Suppose the diameter of the cutter (or work) is given, and a cutting speed has been selected. To find the corresponding number of revolutions, look in the first line at the top for the nearest diameter. Follow down the column headed by the diameter until a cutting speed nearest to the one selected is found. In the first column at the left will be found the corresponding number of revolutions per minute.

105. When the revolutions per minute and the diameter of the cutter (or work) are known, to find the corresponding cutting speed, look in the first column at the left for the nearest number of revolutions. Follow this line to the right until the column headed by the diameter is reached. In this column and on the same line with the number of revolutions, the corresponding cutting speed will be found.

CUTTING SPEEDS IN FEET PER MINUTE.

DIAMETER.

Revs. per Min.	⅛"	¼"	⅜"	½"	⅝"	¾"	⅞"	1"	1¼"	1½"	1¾"	2"	2¼"	2½"	2¾"	3"	3¼"	3½"	3¾"	4"	4½"	5"	5½"	6"	6½"	7"	7½"	8"	9"	10"	11"	12"
5																															
8																						10.47	11 52	12 57	13.61	14.66	15 71	16 75	18 85	20.94	23 04	25.03
10																					10.95	11 94	13 09	14 00	15 71	17 02	18.32	19.63	20.94	23.56	26.18	28.80	31.41
15														10.79	11.78	12 76	13 75	14 73	15 71	16 43	17 68	19.63	21 60	23 56	25.52	27 49	29.45	31 41	35 34	39 26	43 19	47.12	51.04
20											10 47	11 78	13 08	14 39	15 71	17 02	18 33	19.64	22 91	23.58	26.18	28.80	31.42	34.03	36 65	39.26	41.91	47 09	52 34	57 60	62.83	68.06
25										11 45	13 09	14 72	16 36	17 99	19.6	21.27	22.92	24 55	27 49	29 47	32 72	36.00	39.27	42 54	45.81	49 08	52 35	58 89	65 45	72 00	78 54		
30									12 76	13 74	15 7	17 67	19 63	21.59	23 56	25 54	27.49	29.46	32 87	34 37	39 27	43 20	47.12	51 05	54 97	58 90	62 82	70 67	78 54				
35								11 45	13.74	16 03	18 32	20 61	22 9	25 19	27.49	29 77	32 08	34 36	38 45	41 27	45 81	50 40	55 00	59 55	64 14	68 72	73 32	83.63				
40								10.47	13.08	15 72	18 32	20.94	23 56	26 17	28 79	31 40	34 03	36.66	39 27	41 82	47 96	52 36	57 [illegible]	62 82	68.06	73 30	78.53	83.79				
45								11 78	14 72	17 67	20.61	23.56	26 52	29 44	32 39	35 34	38.28	41.23	44 18	49.10	53 05	58.90	64.80	70 68	76 57	82.46						
50								13.09	16 36	19.63	22.92	26.20	29.53	32 72	35.99	39.22	42 54	45 8	49.09	54 76	58 90	65.45	72 00	78 54								
55								14 39	17 99	21.61	25.19	28 79	32.40	35 99	39.59	43.20	46 72	50 42	55.00	60 26	64 84	71.90	79.20									
60								15 7	19 63	23 56	27.48	31 41	35 44	39 26	43 19	47 12	51 05	55 00	60.01	65 7	70.73	78.55									
65							10.63	17.01	21 76	25 54	29 77	34 03	38 38	42 53	46 79	51 05	55 30	59 56	64.82	71 22	76.63										
70						11.45	13 74	18 32	22 90	27 52	32.07	36 65	41 33	45 80	50 39	54 98	59.56	64 16	68 72	76.64	82.52											
75						12 27	14 72	19.63	24 54	29 44	34 36	39 27	44 27	49.08	53 99	58 90	63 81	68 75	73.64	82.44												
80					10.47	13.08	15 70	20.94	26 17	31 41	36 65	41 88	47 22	52 35	57 59	62 82	68 06	73 33	78.64												
85					11 12	13.9	16 68	22 25	27.81	33 41	38 [illegible]	44 50	50 16	55 [illegible]	61 [illegible]	66 72	72 12	77 91														
90					11 78	14 72	17 67	23 56	29.44	35 38	41 23	47.12	53 01	58 84	64 73	70.68	76 57	82.50														
95					12 43	15 64	18 64	24.87	31 28	37 44	43 52	49.74	56 [illegible]	62 [illegible]	68 [illegible]	74.61	84.83															
100					13.09	16.40	19.62	26 18	32 72	39 27	45 81	52 36	58 90	65 45	71 99	78 54																
110			12.79	14 39	18.00	21.50	28 79	36 [illegible]	43 25	50 [illegible]	57 [illegible]	64 [illegible]	72 00	79.19	86 [illegible]																	
120			11.77	15 73	19.7	23 55	1.46	19.4[illegible]	47 18	4 47	62 83	70 78	78 55																		
130			12 75	17.01	21 35	25 51	34.03	42 [illegible]	51 [illegible]	59 55	68.06	76.67	85.09																		
140			13 73	18 37	22.95	27 47	36.64	45.8[illegible]	55 [illegible]	64 14	73 30	82.56																			
150			14 72	19.63	24 61	29.44	39 27	49 22	58.88	68 [illegible]	78 54																				
160	10.47	15 7	20.94	26 21	31 40	41 88	52 47	62 8[illegible]	73 [illegible]	83 77																					
170	11 12	16.68	22 25	27 80	33 3[illegible]	44 5[illegible]	55 79	66 81	77 88																						
180	11 78	17 60	23 56	29.48	35 32	47.12	58 [illegible]	70 74	82.46																						
190	12 43	18 64	24.87	31 1[illegible]	37 29	49.74	62 22	74.67																							
200	13 [illegible]	19.62	26 18	32 74	39.2[illegible]	52 3[illegible]	65.45	78 64																							
210	13.79	20 6[illegible]	27.48	34 36	41.21	54.97	68.72	82 52																							
220	14 39	21 50	28 72	35.94	43 18	57 54	71.90																								
230	15.0[illegible]	22 57	30 10	37.61	45 15	60 21	75 26																								
240	15 70	23 55	31.41	39 74	47 11	62 8[illegible]	78 53																								
250	16.3[illegible]	24 53	32.72	40.87	49.0[illegible]	65 45	81 81																								
260	17.0[illegible]	25 50	34 1[illegible]	42 50	51.01	68 [illegible]																									
270	17 72	26 49	35 44	44 [illegible]	52 98	70 [illegible]																									
280	18 [illegible]	27 47	[illegible] 75	45 77	54 94	73 50																									
290	19.0[illegible]	28 45	38.0[illegible]	47 41	56 [illegible]	[illegible] 12																									
300	19.68	29 4[illegible]	39 37	49 [illegible]	58 86	[illegible] 74																									
310	20.3[illegible]	30.41	40 [illegible]	50 68	[illegible]	[illegible] 3[illegible]																									
320	2[illegible]	31 3[illegible]	41 [illegible]	52 31	[illegible]	[illegible]																									
330	21 [illegible]	32 37	43 20	53 [illegible]	[illegible]	[illegible]																									
340	22 3[illegible]	33 3[illegible]	44 60	55 56	[illegible]	[illegible]																									
350	22 95	34 34	45 [illegible]	57 22	[illegible]	[illegible]																									
375	24 [illegible]	36 82	49 18	[illegible] 43	[illegible]	[illegible]																									
400	2[illegible]	39 2[illegible]	[illegible] 45	[illegible]	[illegible]	[illegible]																									
450	2[illegible]	[illegible]	[illegible]	[illegible]	[illegible]	[illegible]																									
500	32 7[illegible]	[illegible]	[illegible]	[illegible]	[illegible]	[illegible]																									

TABLE II.

CUTTING SPEEDS IN FEET PER MINUTE.

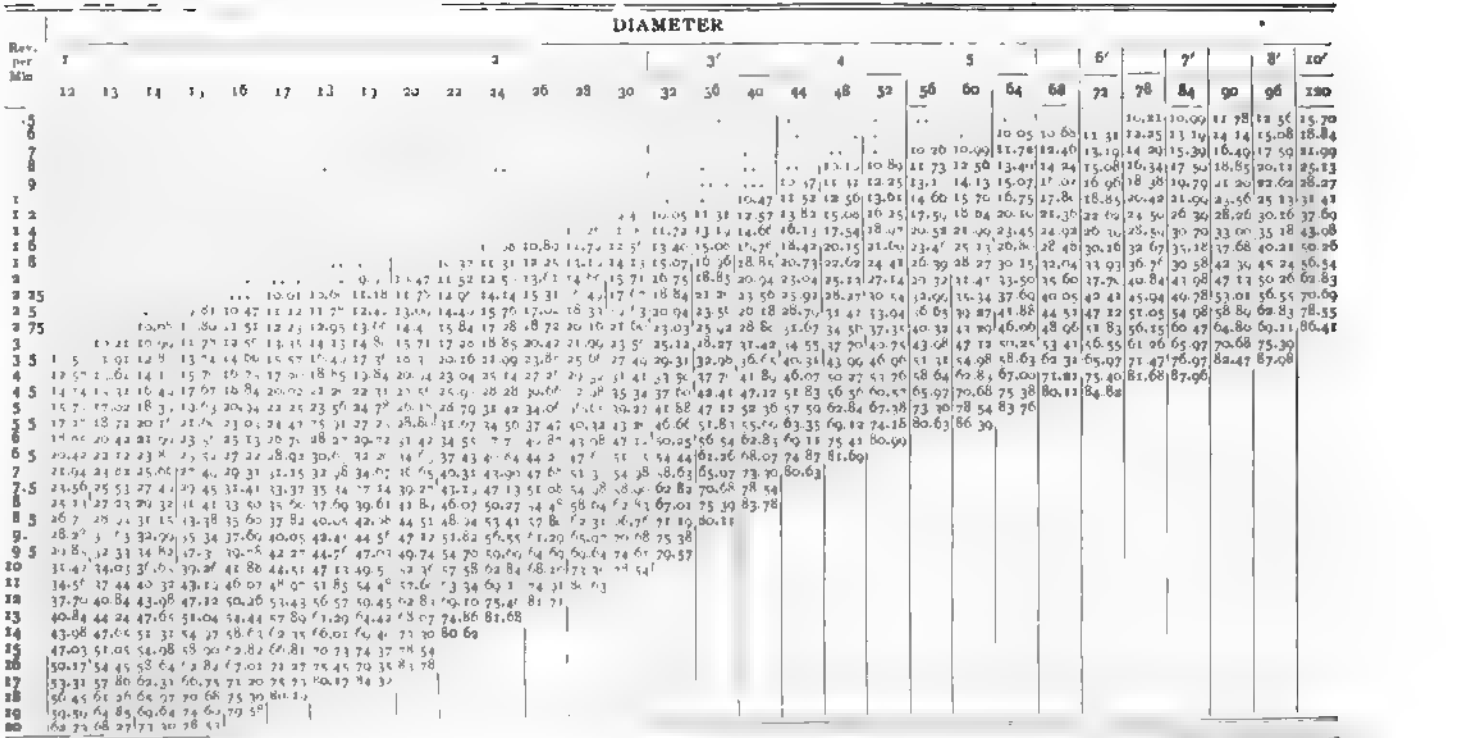

MILLING-MACHINE WORK.

(PART 2.)

LUBRICATION.

INTRODUCTION.

1. Purpose of Lubrication.—An ample lubrication of a milling cutter during the cutting operation not only decreases the friction and thus lessens the heating of the work and cutter, but also carries the heat away to an extent depending on the character, volume, and method of application of the lubricant employed.

The carrying away of the heat is probably the chief benefit derived from an ample application of a lubricant, experience having shown that keeping the cutting edges cool largely prevents them from becoming dull. A proper application of the lubricant will also quite effectively prevent the chips from filling up the spaces between the teeth of the cutter, and will consequently permit an increase in the rate of feed.

2. Materials Requiring Lubrication.—Experience has shown that no lubrication is required for milling ordinary gray cast-iron and yellow-brass castings. For milling wrought iron, steel, steel castings, malleable-iron castings, hard cast iron, bronze, copper, and the various tough copper alloys, lubrication of some sort is usually either necessary or advisable.

Copyright, 1901, by THE COLLIERY ENGINEER COMPANY.
Entered at Stationers' Hall, London.
All rights reserved.

LUBRICANTS.

3. The lubricant generally used for milling cutters is either some oil or a mixture of some oil with soda water and other ingredients. While oil alone is probably the best lubricant, it is also the most expensive; for this reason, it is rarely used for any other than small, fine milling, where ample provision may be made for catching most of the surplus oil and the chips. A cheap mixture of oil with other ingredients is usually preferred for cases where the surplus oil cannot readily be saved.

4. Pure lard oil is by many conceded to be the best lubricant for milling cutters, since it has sufficient body to make it adhere well, and, furthermore, it thickens very slowly from age and use. Its only drawback is the comparatively high first cost. Some of the so-called fish oils are considerably cheaper than a good grade of lard oil, and are considered by some to be fair substitutes. If most of the drippings and chips are caught, the oil may be separated by some form of oil separator, of which a number are in the market, in which case a high-priced lard oil will often prove the cheapest in the long run, since its superior lubricating qualities enable more work to be done.

METHODS OF LUBRICATION.

5. Choice of Method.—The choice of a method of applying a lubricant naturally depends on the service in which the machine is engaged. When only a few pieces are to be milled, an expensive lubricating system is scarcely advisable; when the machine is constantly employed on duplicate work, an elaborate lubricating system will usually pay for itself in a short time by reason of the decrease in cost of maintenance of cutters and increase in production.

The different methods of applying a lubricant to a milling cutter are *by a brush*, *by a gravity feed*, and *by a pump*.

6. By Brush.—The simplest method of lubrication consists of applying the lubricant to the cutter with a brush.

This method is well adapted to delicate work where light cuts are taken. The oil supply being intermittent in this case, it must be frequently renewed, the chips at the same time being cleared out from between the teeth of the cutter. In applying the brush, care must always be taken to so apply it that there is no likelihood of the brush being drawn toward the work by the cutter; that is, apply it to the side of the cutter that runs *away* from the work. A stiff, long-handled, bristle brush is preferable for this work; camel's-hair brushes are too soft for an efficient removal of the chips.

7. By Gravity.—In general, a constant lubrication is preferable to an intermittent one. For this purpose a can or a small tank may be placed at some distance above the cutter; a bent drip pipe with a stop-cock in it may be used for conveying the lubricant to the top of the cutter. The rate of flow is then adjusted by turning the stop-cock. Such a tank is furnished with most milling machines; many machines have the table so designed as to catch all the drippings and chips. The lubricant is then drained off into a suitable receptacle, and after being strained or otherwise purified, it may be used again.

8. When no provision has been made for catching the drippings, a suitable drip pan may be placed under the work. Such a drip pan may easily be made from a piece of sheet tin, bent up to form a box. A piece of brass wire gauze having about 60 meshes to the inch may be soldered to a frame placed into the drip pan, so that the gauze is about 1 inch above the bottom of the pan. This will strain the lubricant automatically to a fairly satisfactory extent; as soon as the drip pan is full, the strainer with the chips is lifted off and the strained lubricant poured into the tank. After the lubricant has been used a number of times, it requires straining in some more efficient manner.

9. By Pumping.—A constant stream of lubricant will not only keep the cutter sharp for a greater length of time, but will also wash the chips out of the cutter. This fact

has gradually become so well recognized that it is becoming quite universally the practice to pump the lubricant on the cutter in a constant stream under a light pressure. As a general rule the pump used is a rotary force pump, which is driven directly from some rotating part of the machine.

10. Fig. 1 shows the arrangement adopted by one manufacturer for a machine intended for fairly heavy milling. In the illustration a rotary pump *a* is shown attached

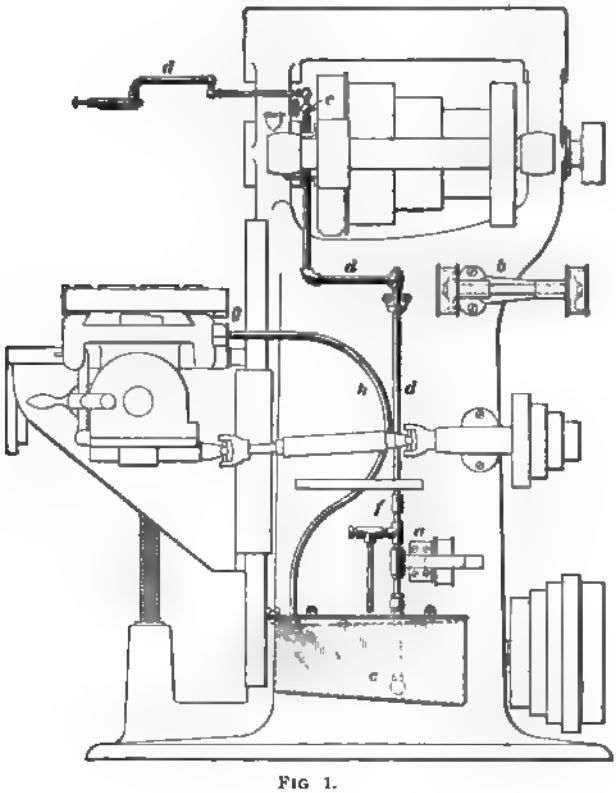

FIG 1.

to the frame of the machine. This pump is driven by a belt from the countershaft *b*, which is carried by a bracket bolted to the frame. The suction end of the pump connects with the tank *c* holding the lubricant, which is pumped

through the pipe system *d d* and is delivered directly on the cutter. In order to accommodate different sizes and positions of the cutter, the upper part of the piping has swivel joints and, hence, can be arranged to deliver the lubricant where it will be most effective. The quantity of lubricant that is discharged can be regulated by the stop-cock *c*. The pump *a* runs at a constant speed and consequently delivers a constant volume of lubricant. When less than this quantity is used, the rising of the pressure in the pipe system will open the relief valve *f*, and the excess will pass back into the tank. In the machine shown, a gutter extends around the table, from which the lubricant drains into the trough *g*, and then through the flexible tubing *h* back to the tank. It is thus seen that the lubricant is used over and over again; the only lubricant lost is that adhering to the chips, but a large percentage of this can be recovered if a separator is available.

11. When the lubricant is supplied in a constant stream, it is well to discharge it as close to the cutter as circumstances permit, in order to prevent splashing; it should be delivered preferably in such a direction that the issuing stream will tend to wash the chips out of the cutter and away from the cuts.

12. Internally Lubricated Cutter. — The advantages to be derived from a forced system of lubrication so

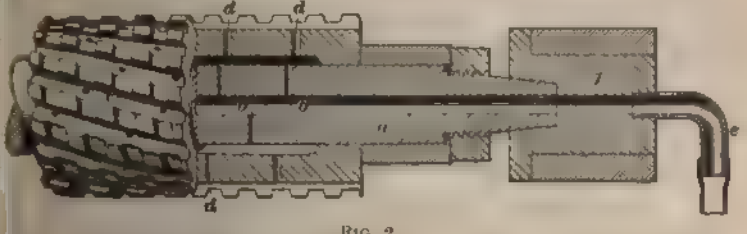

FIG. 2

applied as to effectively clear the cutter have led to the design of internally lubricated cutters. Such a cutter, patented by the Newton Machine Tool Works, is shown in

Fig. 2. Referring to the figure, the arbor *a* is seen to have a central hole drilled into it; this hole extends nearly to the plane of the shoulder against which the cutter is clamped. A number of radial holes, as *b*, *b*, are drilled through the arbor, and hence the recess within the cutter *c* is in communication with the central hole of the arbor. A number of holes, as *d*, *d*, are drilled in the clearance spaces through the shell of the cutter. The lubricant is pumped through a tube *e* into the arbor and issues in fine streams through the holes *d*, *d*, thus effectually clearing the cutter of chips and applying the lubricant where it is most needed, that is, directly to the cutting edges. The end of the arbor is tapering, and fits a tapered hole of the stationary bushing *f*, which is placed in the outboard bearing. This construction allows the arbor to revolve, but prevents any escape of the lubricant except through the radial holes in the arbor.

SELECTION OF CUTTER.

CONDITIONS GOVERNING THE CHOICE.

13. The **selection of a cutter** for a job is a matter that depends not only on the nature of the work, but also on the construction of the machine, the attachments to the machine, the rigidity of the work itself, the manner in which it can be or is held, and the cutters that are available. For instance, if a large surface of a rather springy casting is to be finished by milling, it will often be out of the question to use a wide cylindrical plain cutter, because the pressure of the cutting operation, even with a very fine cut, may be sufficient to seriously spring the work. But, if a small end mill is used, it may be possible to make a very satisfactory job of machining the casting.

14. Some machines are so constructed that only side milling cutters can be used, hence the operator has no latitude at all in the choice of a cutter. Other machines have no outboard bearing to support the arbor; it would be a

mistake to select a wide cylindrical plain cutter for finishing a wide plane surface in such a machine, since the spring of the arbor even under a very light cut may be sufficient to condemn the work. In such a case, a side mill or end mill would probably prove satisfactory.

15. When surfaces parallel to the line of motion are to be finished at an angle to each other, it usually becomes a question of attachments, cutters, and type of machine available. For instance, in a plain milling machine it may be possible to do the job only by the use of angular cutters; in a universal milling machine, when the job may be held between centers, it might be done by a cylindrical plain cutter, and so on.

16. When the choice has narrowed down to a certain type of cutter, the question of which kind of the chosen type of cutter will remove the most stock at the least expense often becomes a very pertinent one. Suppose that it has been determined that a cylindrical plain cutter is to be used. Then, if the surface is narrow, a straight-tooth cutter should be selected, and if heavy milling (i. e., the removal of a large amount of stock) is required, a nicked cutter or its equivalent (an inserted-tooth cutter) would be selected.

17. When it is a question of whether a plain mill, a side mill, or an end mill is to be used, it is to be observed that for side milling and end milling less power is usually required. Furthermore, when the cutter must pass over slender or pointed parts of the work, there is less springing and less breaking of the edges with a side cutter or end cutter than with a plain cutter. On the other hand, the plain cutter will usually produce the work in less time, and is the one to use when other circumstances permit it.

18. Considering now the case of grooving, when the groove is straight, it can usually be cut cheapest by plain cutters, slitting cutters, or formed cutters, depending on the profile of the groove. When the groove follows a helical path, it can be cut by an end mill, a form cutter, a

formed cutter, or an angular cutter; when the cross-section of a helical groove is required to be rectangular, a plain milling cutter or slitting cutter cannot be used, but an end mill must be employed instead. When grooves following an irregular path are to be cut, an end mill will almost invariably have to be used, although it may be possible occasionally to use plain mills or formed mills for part of the groove.

From the foregoing statements it will be seen that the selection of a cutter is a matter of judgment, which must be based on practical experience with different milling operations.

DIAMETER OF CUTTER.

19. The **diameter** of the cutter has an appreciable influence over the length of time required to machine a surface. As a general rule, it may be stated that with equal

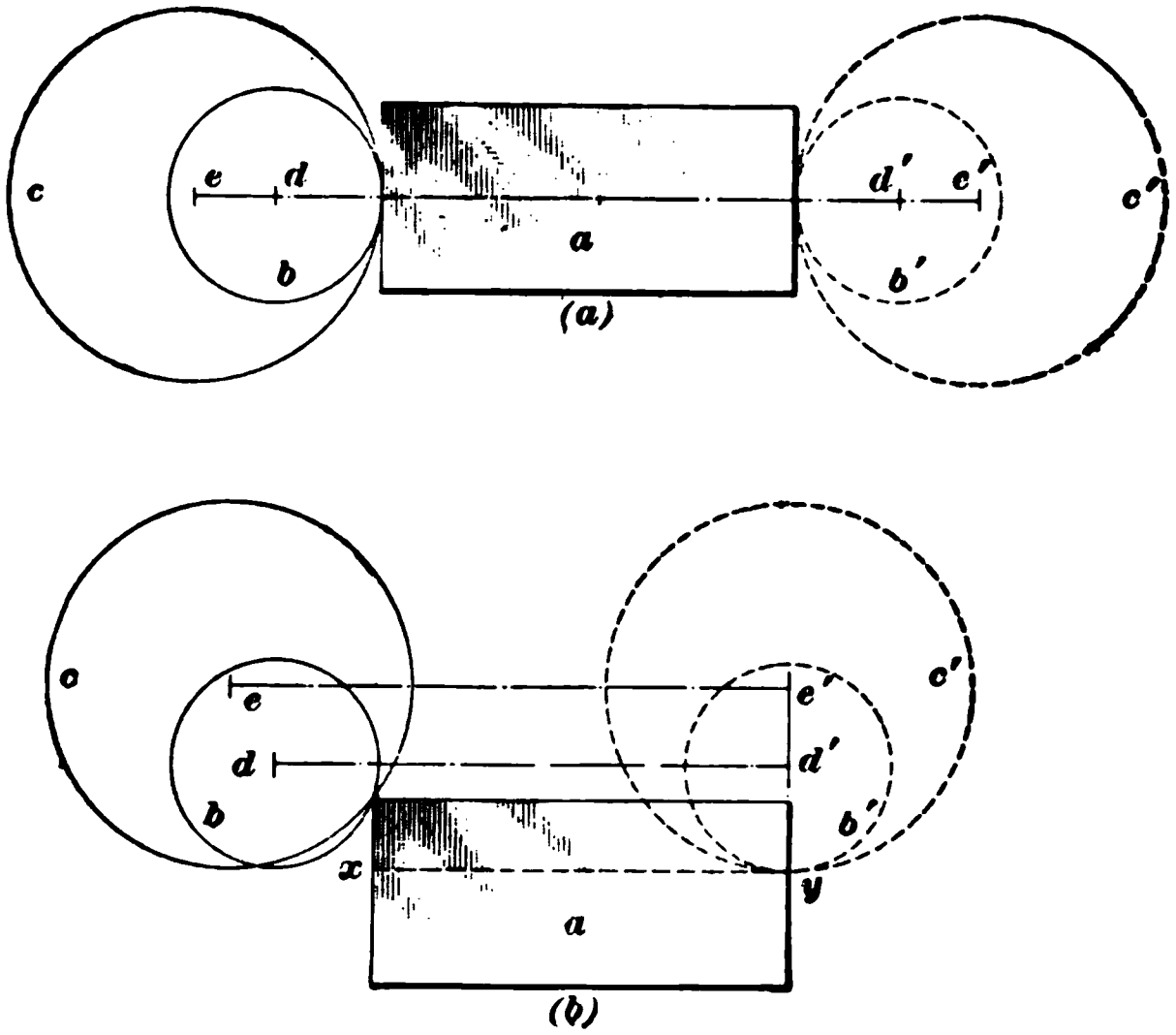

FIG. 3.

feeds per minute, a small cutter will pass over a surface in less time than a large cutter. In order to show the reason

for this statement, Fig. 3 has been drawn; it shows in diagrammatic form the positions occupied by cutters of different diameters when they begin and cease to cut. Referring to Fig. 3 (*a*), let *a* be the surface that is to be machined by an end mill. Let the circle *b* represent the diameter of one of the two cutters that are available, and let *c* be the diameter of the other. Then, at the beginning of the cut the cutters will be in the positions shown, and their axes will be at *d* and *c*. Now, in order to pass clear across the surface *a*, the cutter *b* must advance to *b'*, and its axis will then be at *d'*. It is seen that the length of the path of *b* is equal to the distance *d d'*, while the length of the path of *c* is equal to *e e'*. But, *e e'* is much greater than *d d'*, which shows that a small cutter will travel over a shorter distance than a large cutter in order to pass over the same surface. The same statement applies to plain cutters, angular cutters, formed cutters, etc.

20. Referring to Fig. 3 (*b*), assume that the work *a* is to be milled down to the dotted line *x y*, and that *b* and *c* show the diameter of two plain mills when set to begin cutting. Then, in order to pass across the work, the cutter *b* must travel the distance *d d'*, while the cutter *c* must travel the distance *e e'*, which is greater.

21. A person must not fall into the error of assuming from the foregoing that the mere fact of one cutter being smaller than the other means in itself that the work can be machined quicker in every case by using the smaller cutter, since it is only when circumstances permit equal, or nearly equal, rates of feed per minute that the smaller cutter will have the advantage. Under these conditions, on some classes of work a saving as high as 10 per cent. may be effected in the time cost by the difference of only ½ inch in the diameters of the cutters. It is well to bear in mind that the saving effected by the use of the smaller cutter is proportionally greater for short work than for long work. Referring to Fig. 3 (*a*), the distance saved by the use of the smaller cutter is $e d + d' e'$. Evidently, this saving for the

given difference in diameters remains constant, no matter what the length of the work, and it follows from this that the ratio between the saving effected and the total distance traveled by the larger cutter becomes less as the total distance becomes greater.

22. The minimum size of cutter that can be used is naturally governed by practical considerations. Thus, in the case of an end mill, it must be sufficiently stiff to stand a fair cut without bending; in the case of a plain mill, the advisability of leaving sufficient stock around the hole of the cutter governs its smallest permissible size. Again, a short cutter can usually be smaller than a very wide cutter, since the stresses to which the cutter is subjected by the cutting operation will, as a general rule, be less severe with a narrow than with a wide cutter.

LIMITATIONS AND ERRORS.

23. The limits within which work can be milled to a given size largely depend on the construction of the machine and the character of the workmanship, also on its condition and the nature of the work. With a high-grade machine in first-class condition, and using *sharp* cutters on work that is rigidly held, many jobs can readily be milled within a very small limit of variation, say $\frac{1}{1000}$ inch. In fact, on many classes of duplicate work done in large quantities, all fitting can be entirely done away with, since it is practicable to mill the work close enough for a fair fit. With a springy machine in poor condition, and dull cutters, such results cannot be obtained, and work done on them will usually call for considerable hand fitting, not only on account of the greater variation in the size but also on account of the poor quality of the surfaces produced under such conditions.

24. It is not possible to state definitely what the limit should be within which work should be milled to a given size. This limit naturally depends on the purpose of the

work; for comparatively rough work, as milling nuts, bolt-heads, the squares on the ends of taps and reamers, etc., a limit of $\frac{4}{100}$ inch may usually be considered as allowable. Work that is milled only for finish can often vary considerably from its true size; the amount allowable must obviously be determined on the merits of each case. Parts of sewing machines, typewriters, firearms, and similar fine, small work are usually finished within a limit of $\frac{2}{1000}$ inch, although some parts require to be, and can be, finished within a smaller limit.

25. When milling large work, or finishing a rather wide surface with a plain mill, it is not always possible to obtain as close an approach to a plain surface as the planer tool with its single cutting edge will produce. One reason for this is a lack of rigidity of the machine used; another reason may be found in the fact that with a milling cutter, the pressure on the work during the cutting operation is many times greater than in the case of the planer tool, and, hence, there will be more springing of the work. Furthermore, when a plain cutter is beginning to take a chip while the work is fed against the cutter, the pressure is at first in line, or nearly so, with the surface of the work. Now, as the tooth doing the cutting advances upwards, the direction of the pressure changes, and, being upwards, tends to lift the work from its fastenings. This change in the direction of the pressure is naturally most marked in deep cuts, and if the work yields to a sensible extent, will result in an uneven surface.

26. In a planer, shaper, or slotter, however, the direction of the pressure never changes, and since its intensity is much less than with a milling machine, it follows that as far as large plane surfaces are concerned, the machine tools first mentioned can, in general, be better relied on to produce them. As a matter of course, with a very rigid machine especially designed for surface milling, and with work so rigid that deflection will be so small as to be insensible, a very close approach to a plane surface can be

obtained by milling; in general, however, it will be found that the planer has slightly the advantage. For this reason, it is customary in some places to rough out the surfaces of heavy work on some suitable form of a milling machine, and then to transfer the work to a planer, where it is finished by planing. This will, in many cases, be more economical than planing the whole job, since with a properly designed and handled milling machine, the roughing out can usually be done at a fraction of the cost of planing. While it must be conceded that at present the planer has slightly the advantage so far as truth of large surfaces is concerned, it can be confidently predicted that in the course of time, by the advent of more rigid milling machines, its superiority will not only disappear, but be surpassed. There are many heavy milling machines built today that under favorable conditions will produce true plane surfaces as well as the planer.

27. The commercial limits to the field of usefulness of the milling machine are not known, since new fields for it are constantly being found. While it will probably never entirely supersede the planer, shaper, or slotter, it can safely be predicted that it will more and more take their place for a large variety of work as the machine becomes better developed and understood.

USE OF MILLING MACHINES.

HOLDING WORK.

28. The work may be held in the milling machine by attaching it directly to the table, by holding it in a vise, by holding it between centers, or in a chuck or on an arbor attached to the index head, and, finally, by means of special fixtures. No matter in what manner the work is held, there are certain conditions that must be fulfilled in order that the machining can be done successfully. *First*, the

work must be held so rigid that it cannot slip under the pressure of the cutting operation; *second*, it must not be deformed by the clamping; *third*, it must be so supported by suitable means that it will not deflect either under its own weight or the pressure of the cut; *fourth*, it must be lined up properly so that the machining will take place in the required direction.

HOLDING WORK ON TABLE.

29. Holding Devices.—If circumstances permit, the best way of holding work to a table is to bolt it directly to it, using bolts with low heads that will slip into the T slots of the table. When this cannot be done, clamps must be used. Owing to the fact that the pressure due to the cutting operation is usually much larger than is the case in planer work, the work must be held much tighter to prevent its slipping, and, hence, in general, the clamps should be more rigid and the bolts heavier than would be required for the same job on the planer. Furthermore, a positive stop or stops should be used whenever feasible. If the table has holes in it, pins similar to planer pins may be used; in the absence of holes, a bar can usually be bolted directly to the table to form a stop, and the work can then be pushed against it. Considerable ingenuity will often be required to so clamp the work that there is no danger of its slipping, especially in vertical milling machines when the work that is attached to the table is intended to be machined all around its circumference in one setting. In such a case, there will be a tendency to rotate the work, which tendency must be counteracted either by the friction caused by clamping or by stop-pins.

30. The general character of the clamps, pins, screw pins, toe dogs, and similar clamping devices used does not differ in any essential particular from that of the corresponding devices used in planer work. Neither is there any difference as far as their application is concerned, except

that more attention must usually be paid to supporting the work on a milling machine than is required for a planer.

31. Construction of Rotary Planer.—An example of how work may be clamped to a milling-machine table is given in Fig. 4. In this case, the machine used belongs to a type designed especially for producing flat surfaces by the use of a large side milling cutter. Such machines are commonly called **rotary planers.** In the machine shown, the bed *a* has flat ways on top to which the saddle *b* is fitted. The saddle carries the spindle and cutter, which are driven by gearing from the belt pulley *c*. A suitable feed arrangement allows the saddle to be moved along the bed either by

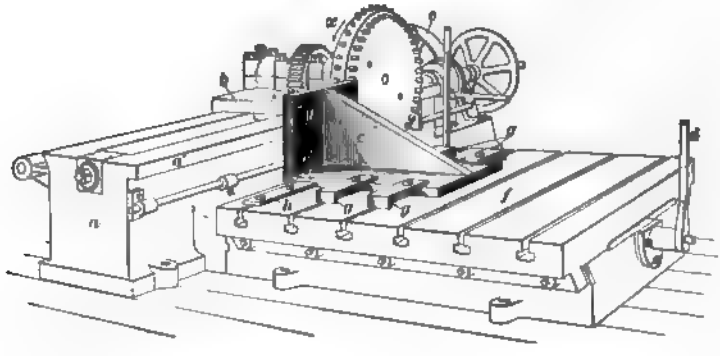

FIG. 4.

hand or automatically; most machines have adjustable tappets by means of which the feed can be stopped at a predetermined point. As far as adjusting the cutter for the proper depth of cut is concerned, practice varies. In some machines, the spindle and cutter are movable axially to a limited extent, while in others, the table can be moved in a direction parallel to that of the spindle. Both designs accomplish the same thing and incidentally show that frequently there are a number of different ways of performing the same operation. In the particular machine shown, the table is moved by means of a feed-screw operated by the handle *d*.

32. Lining the Work.—The work *e* is a large bracket; it is intended to machine the surface toward the bed so as to be at right angles to the surface that rests upon the table. Now, in rotary planers, and also in nearly all milling machines, except those of the vertical type, and in some special machines, the axis of the spindle is parallel to the surface of the table *f*; and since a side cutter produces a surface at right angles to the axis of the spindle, it follows from the construction of the machine that if one surface of the bracket *e* rests upon the table, the other surface will be machined at right angles to it.

33. When it is required that the surface about to be machined is to be at right angles to the surface *e'*, the work must be fastened in the proper position to accomplish this. If the edge of the table that is toward the bed is parallel to the line of motion of the saddle, as is usually the case, a try square may be used for lining up the work. The stock of the square is then placed against the edge of the table and the casting is shifted until its surface *e'* touches the blade of the square throughout its length. In many cases, it will be possible to set work square by placing the stock of the try square against the edge *a'* of the bed, which naturally is parallel to the line of motion of the saddle, since it is a part of the ways on which the saddle slides. Work may be set parallel to the line of motion by the aid of inside calipers applied between *a'* and the work. When this cannot be done, the milling cutter itself may be used for testing the setting by having it first in the position shown and measuring the distance between some tooth and the work. The saddle is then fed along the bed until the tooth selected for testing is near the left-hand edge of the work; its distance from the work is then measured, and if the two measurements agree, the work is correctly set. It will be understood that the cutter must not be in motion during the process of testing.

34. Clamping the Work.—A job of the nature shown in the illustration would most likely be clamped by using

bolts and clamps, as *g*, *g*. These clamps may have one end bent to obviate the use of blocking, or they may be straight, in which case they must be blocked up. With the cutter revolving in the direction of the arrow *x*, the pressure of the cut will tend to shift the work in the direction of the arrow *y*; for this reason, a stop *h* is bolted to the table and against the surface *e'* of the work. The stop is simply a strap having two holes in it; bolts are slipped into a T slot in the table and pass through the holes of the strap, which is clamped by tightening the nuts on the bolts. It will be observed that the strap is held from slipping by friction only; it is wise for this reason to place a piece of manila paper between the table and the strap, since experience has shown that this will greatly increase the resistance to slipping. If the table has holes in it for the reception of pins, it is better to use pins for stops, since they cannot slip.

35. Use of Angle Plate for Plain Milling Machine.—Fig. 5 is an example of how a job may be clamped to the table of a plain milling machine of the pillar type, using an angle plate to hold the work square with the table. In this case, the work *a* is a sliding table for a machine tool; it has a dovetailed bottom that is to be accurately machined so that the bottom surfaces are parallel to the top. A little study will show that with this type of a machine, the milling can be done only with end mills and an angular mill fastened to a shank, if the whole bottom is to be finished in one setting, which is necessary if all surfaces of the bottom are to be correctly machined. This means that the work must be set up on edge, and since it would have but a very small bearing on the milling-machine table, an angle plate *b* can be advantageously used to insure that the bottom will be milled parallel to the top, and also to steady the work. Since the work has T slots in it, bolts can be slipped into these; they are then passed through the slots of the angle plate in order to bolt the work to it. In case the angle plate has no slots that will come opposite the slots in the work, the latter could be attached by bolts and clamps to

the angle plate. The work is held down on the milling-machine table by the clamps *c*, *c*, the rear ends of which rest on packing blocks *d*, *d*. The pressure of the cutting

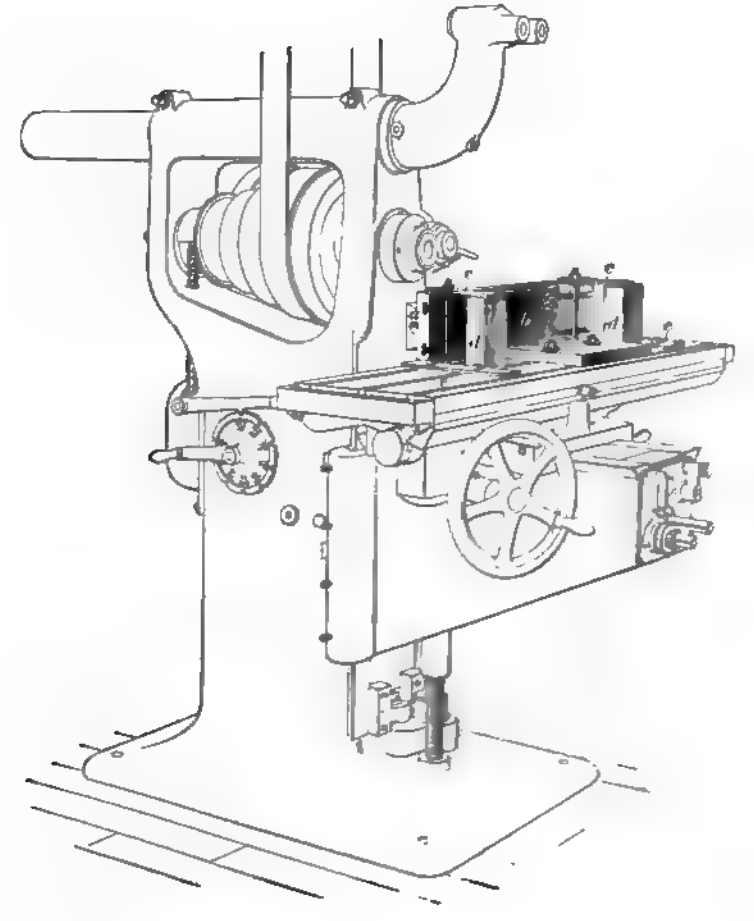

FIG. 5.

operation in this case tends to overturn the work and also to slide it along the milling-machine table: the first tendency is resisted by the angle plate and the second by

the stops *e*, *e*, which are bolted to the table in contact with the ends of the work.

36. Lining the Work.—Lining the work is accomplished, in this case, by a proper lining up of the angle plate. Since the surface of the milling-machine table, in all machines of the type shown, is parallel to the axis of the spindle, the surface of the angle plate that is toward the spindle will be at right angles to the axis, if the plate is bolted directly to the table; consequently, it only remains to line up the plate parallel to the line of motion of the table. This can be done by the aid of some suitable tool with a blunt point that is held in the spindle. Run out the table until the marking point is near one edge of the angle plate, say the right-hand one; then, by means of the cross-feed screw in the knee, move the table toward the marking point until a piece of paper will just be nipped between the marking point and angle plate. Now run the table back until the marking point is near the left-hand edge of the angle plate and see if the paper will be nipped again. If this is not the case, it shows that the angle plate must be shifted; after each shifting, the setting must be tested again in the same manner.

37. Testing the Setting of Work. — In milling machines arranged for plain or angular milling, as in the machine shown in Fig. 5, the setting of work may be tested for parallelism with the surface of the table by means of a surface gauge, which is used exactly as in planer work. When for any reason a surface gauge cannot be employed, a scriber may be clamped between the washers of the milling-machine arbor and used for testing the setting by moving the table under it. It will be understood that the spindle must be stationary during the testing.

38. A piece of work of the nature shown in Fig. 5 could have been set quicker in a vertical milling machine, since in such a machine it could have been clamped directly to the surface of the table, using finger clamps inserted in the T slots of the work for holding it.

39. Holding Work in a Vertical Milling Machine.—Fig. 6 is an example of how work may be clamped to the table *e* of a vertical milling machine when it is required to machine the circumference of the work. In this case, the job is the strap for a steam-engine connecting-rod that is to be milled with a cylindrical end mill *a*. In order

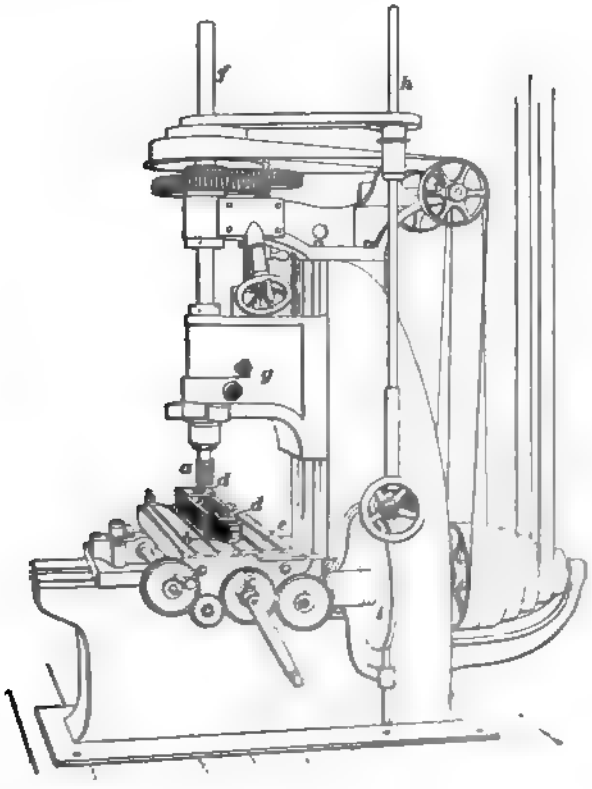

FIG. 6.

that the end of the mill may clear the table, the work *c* is placed on two parallel blocks *b*, *b*, which raise its bottom above the table. Short clamps *d*, *d* are placed on top of the strap over the clamping bolts, which have previously been inserted in the T slots of the table. The outside of

the strap can easily be finished by milling without changing the setting. After the outside is finished, clamps may be applied from the outside before the inside clamps are removed; when these outside clamps have been tightened, the inside clamps *d*, *d* are removed. By proceeding in this manner, the setting of the work will not be changed and the inside of the strap will be left clear for milling.

The straight surfaces of the strap are finished by using the regular feeds; the curved end must, however, be finished by working both feeds simultaneously by hand, cutting to a line previously drawn on the top surface of the strap, which line shows the edges of the work when finished.

40. When a job is held to the table in such a manner that it can be machined all around its circumference, it will usually be a rather difficult matter to provide positive stops that will prevent shifting, and the friction created in clamping must be relied on. It may be stated as a general rule, that whenever it is possible to use positive stops, it is advisable to do so. When friction alone prevents slipping, lighter cuts and lighter feeds must be used, and special care is required in starting the cut.

41. Construction of a Vertical Milling Machine. The vertical milling machine shown in Fig. 6 is one of the many designs in the market. The table *e* is arranged to be fed in two horizontal directions at right angles to each other; its level is fixed. The spindle *f* is adjustable in a vertical direction, and a good support close to the cutter is provided by making the headstock *g* adjustable. The table is provided with an automatic feed in both directions; the feed-shaft *h* is driven by belting it to a pulley on the spindle *f* and carries a small friction wheel that is in contact with the feed disk *i* and rotates it by friction. The friction wheel on the feed-shaft is fitted in such a manner that it can be moved along the shaft, and, consequently, its position in regard to the center of the disk *i* may be varied. Since the rate at which the feed disk revolves depends directly on the distance of the friction wheel from the center of the disk, it

follows that, by moving the friction wheel to different positions, the rate of feed is varied, and by shifting it past the center of the feed disk, the feed is reversed.

42. Some vertical milling machines have a removable bottom bearing for the end of the spindle; this corresponds to the outboard bearing of the horizontal milling machine and serves the same purpose. The vertical milling machine cannot be said to be able to do work that cannot be done on the horizontal type of machine; it is more convenient, however, for work that requires to be finished with end mills, since the work is in plain sight. The job shown in Fig. 6 might have been done in the machine shown in Fig. 5 by strapping it to an angle plate; it would not have been in as plain sight, however. While the vertical milling machine shown is a *plain* machine, it is also built as a *universal* machine.

43. The peculiar advantage of the vertical machine for some work, as far as having the cut in plain sight is concerned, has led to the design of special attachments for converting a horizontal machine temporarily into a vertical spindle machine. Such attachments are supplied by all the makers of milling machines on regular orders, and are a convenient makeshift for some work, as, for example, the job shown in Fig. 7. This piece of work requires to have its top surface and all the surfaces of the recess finished by milling. If a vertical spindle machine is available, it should be chosen for doing the job; in the absence of one, a vertical milling attachment may be used on a horizontal machine. When no such attachment is available for a horizontal machine, the work must be fastened to an angle plate.

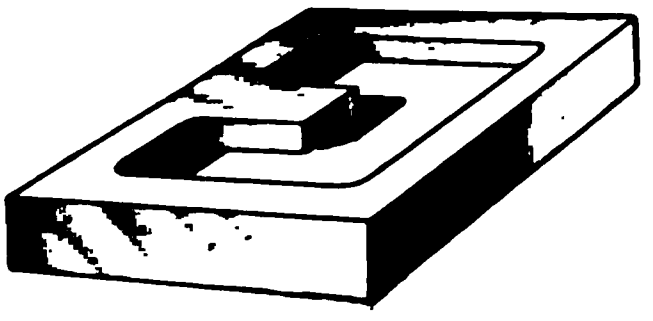

FIG. 7.

44. Lining the Work.—When it is required that the top surface of a job be finished parallel to the surface of the

milling-machine table, its setting in most cases is most conveniently tested with a surface gauge. When the sides of work are to be lined up parallel with either direction of motion of the table, the setting may be tested with a pointer clamped to the spindle, traversing the work along the pointer.

In some cases a large try square may be used; in that case, the blade may be applied to the work while the stock is placed against one of the edges of the table, which are usually made exactly parallel to the line of motion for this very purpose.

45. A Double-Headed Machine.—Fig. 8 is an example showing how work may be held on the table of a machine that resembles a planer in some respects. This

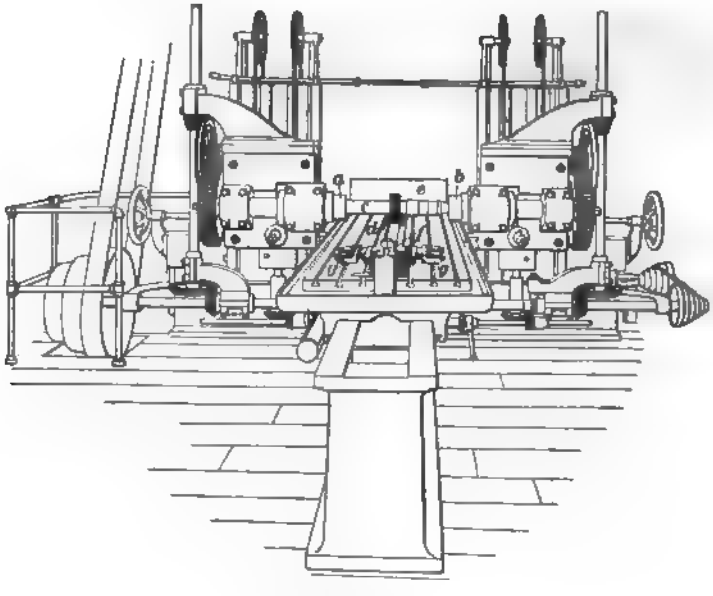

FIG. 8.

particular machine is of the multispindle type, having two independently adjustable spindles *a* and *b*, which, however, can be used for driving an arbor *c* from both ends, as is done

in this case. The work *d* is a side rod for a locomotive, which is to be milled out between the ends to an I section. The cut that is taken is quite heavy, being about 4½ inches wide, 1 3/16 inches deep, and feeding at the rate of 2 inches per minute. In consequence of this, the pressure of the cutting operation that tends to slide the work along the table is quite heavy. In this case, movement of the work is prevented by letting it butt against an angle plate *e*, which is bolted to the table at the rear, and which, in turn, is prevented from shifting by struts that are placed between it and the end of the table. Owing to the view taken, these struts cannot be seen. The work is held down on the table by bolts and clamps placed at each end; the clamp *f* at the front end can be plainly seen in the illustration. Jacks *g*, *g*, each of which has two setscrews, are bolted to the table and are used for adjusting and confining the work sidewise. A double-headed machine, like the one shown, is well adapted for finishing two surfaces parallel to each other in one passage of the work past the cutters.

46. Clamping Work for Grooving.—Fig. 9 (*a*) shows how cylindrical work may be held on the table of a horizontal milling machine when a slot or groove is to be milled in it in line with the axis of the work. A milling-machine strip *a*, which has a tongue *a'* at the bottom, is bolted to the table with the tongue in one of the T slots. The surface *a''* of the strip is machined parallel to the line of motion of the table, hence, any work placed against it is parallel to the line of motion. Persons familiar with planer work will recognize the milling-machine strip as the device known as a *planer strip*, which is constructed in the same manner and serves the same purpose.

Let *b* be a shaft in which a keyway (shown in dotted lines at the top) is to be cut throughout its whole length. Then, evidently, the clamps must be clear of the cutter and, hence, must be placed about in the position shown. When the clamp is tightened on the work, the pressure will be exerted along a line as *c d*, so that the shaft will be held to

the table and against the milling-machine strip at the same time. In consequence of the direction in which the pressure acts, the clamp tends to slip in the direction of the arrow x; if the clamp used is a U clamp, it will simply slide off. From this it follows that a clamp with a hole to fit the

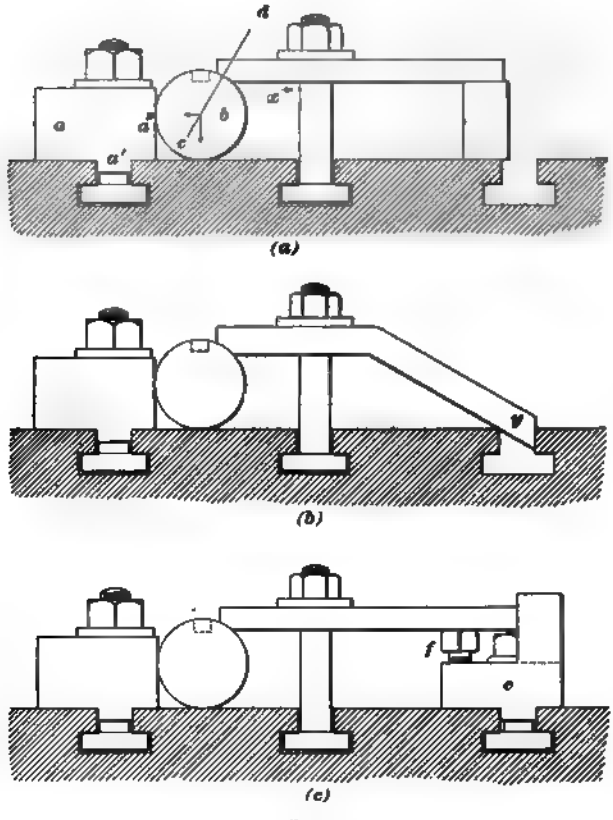

FIG. 9.

clamping bolt must be used. With such a clamp, the slipping is resisted only by the resistance of the clamping bolt to bending; if this bolt is short and stiff, it will usually be sufficient, but if it is rather long, as must be the case when the diameter of the work is large, it will bend.

47. Fig. 9 (*b*) shows how the clamp may be constructed to prevent it from slipping back. The clamp is bent and made of such a length that its rear end *y* will catch the edge of a T slot. Fig. 9 (*c*) shows a way of accomplishing the same thing by the use of a special packing block *e*, which has a projection on it to prevent the clamp from moving, and is bolted to the table. The block may be adjusted for different heights of work by turning the setscrew *f*; the rear end of the clamp rests on the head of this setscrew.

48. Adjustable Packing Block.—Fig. 10 is a suggestion of how a shaft that is to be splined may be held for milling with an end mill in a horizontal machine, or with a slotting cutter in a vertical machine. The shaft *b* is placed in one of the T slots of the table, the edges of which, being parallel to the line of motion, will line the shaft properly. The packing block *a* is adjustable for height, being made in

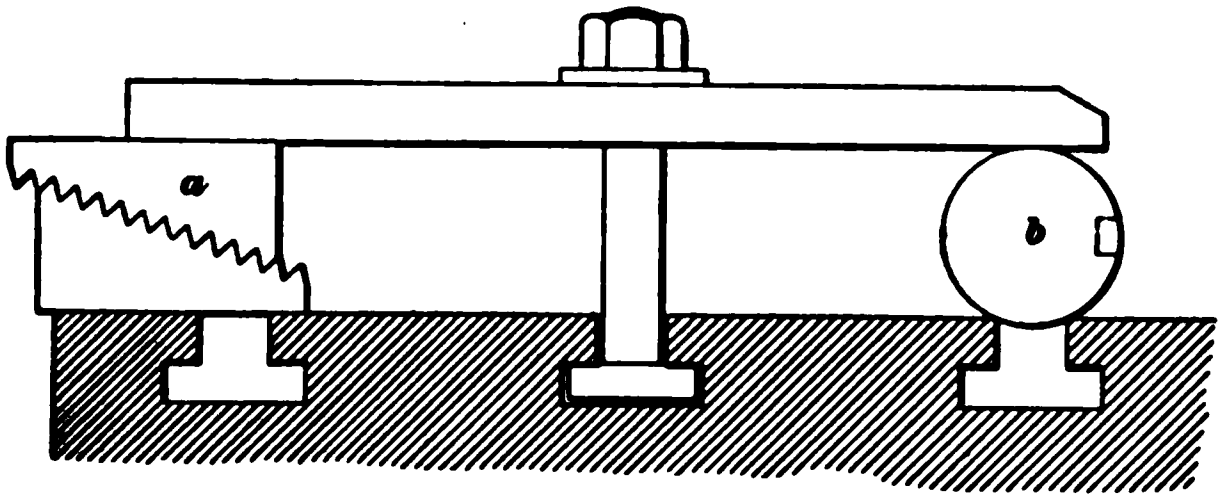

FIG. 10.

two parts that are duplicates of each other, and with saw teeth of about $\frac{1}{8}$- to $\frac{1}{4}$-inch pitch on their inclined sides. This style of packing block is very little known at present; it will be found one of the most useful articles for the milling machine, planer, drill press, etc., when much work is to be held by clamps. When work is held in the manner shown in Fig. 10, there is no tendency for the clamp to slip off in clamping, hence, U clamps may be used to advantage.

HOLDING WORK IN THE VISE.

49. Purpose of the Vise.—The vise used in milling-machine work is intended for holding small work having two parallel surfaces, and can only be used for other work by substituting special jaws for the regular ones. Milling-machine vises are made in various ways by the different makers; when the machine is used only for plain milling, the vise is usually made so that it can be placed on the

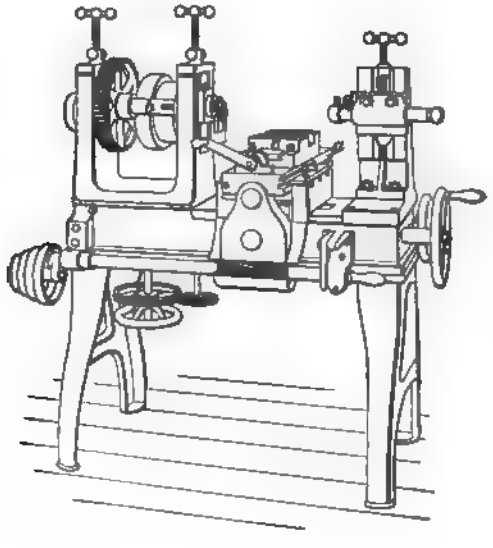

FIG. 11.

machine either with its jaws in line or at right angles to the direction of motion of the table, but not at any other angle. Such a vise is called a **plain vise,** and is most frequently used with plain milling machines, as, for instance, the so-called *Lincoln* type of machine shown in Fig. 11, which is intended especially for vise milling on duplicate work done in large quantities.

50. Construction of the Lincoln Miller.—The distinguishing feature of the **Lincoln** type of machine is a

vertically adjustable horizontal spindle *b* and a corresponding outboard bearing *d*. The table *a* is movable both in line with, and at right angles to, the spindle *b*; the plain vise *c* is rigidly bolted to the table (with its jaws parallel to the axis of the spindle in this case). The Lincoln type of machine is especially adapted for short cuts on work that can be held in a vise, or in any fixture that is the equivalent of a vise, and is capable, with proper handling, of doing very accurate work of the class it is intended for, since the design allows a very compact, rigid, and comparatively inexpensive machine. Machines of this design are largely used in typewriter, sewing-machine, and armory work.

51. Swivel Vise.—For general work, milling-machine vises are usually constructed with a swivel base, and are then called **swivel vises.** One design of such a vise is shown in Fig. 12 (*a*). It has a movable jaw *a* and a fixed jaw *b*; the jaw *a* can be set up by the screw *c* and crank handle *d*. The base is circular and graduated into degrees; it can be swiveled around on the subbase *e* and clamped to it in any position. This subbase is bolted to the milling-machine table; it usually has tongues that fit a T slot of the table and insure that a zero mark on the subbase is in line with one, and at right angles to the other, direction of motion of the table. The

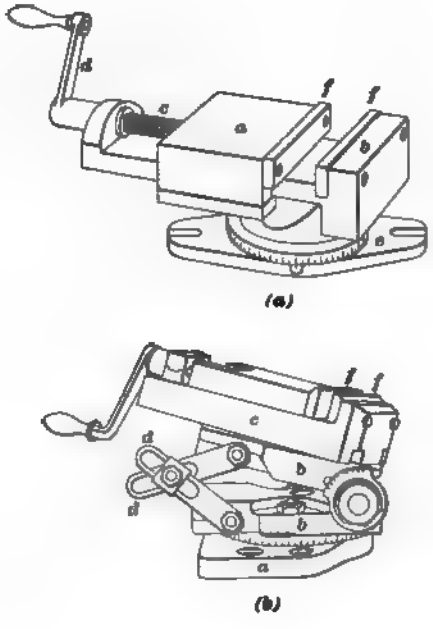

FIG. 12.

graduation on the base of the vise, as a general rule, is so placed that when its zero coincides with the zero mark on the subbase, the jaws will be in line with the spindle. Consequently, the reading of the graduation indicates the angle included between the vise jaws and the axis of the spindle.

52. In a regular milling-machine vise, the vertical surface of the jaws is always exactly at right angles to the surface of the table; consequently, if any work is held between the jaws, its top surface will be milled square with the sides in contact with the vise jaws when a cut is taken in a direction across the jaws, and the measurement is made in the direction of the cut.

53. The milling-machine vise is used in the same manner as in planer work, and the same appliances and methods are employed for lining up the work and holding it fairly against the fixed jaw. It must always be remembered, however, that the pressure of the cutting operation is much greater in milling-machine work; for this reason, the vise must be clamped very solidly to the bed, and in case a cut is taken parallel to the vise jaws, the work must be held very tight.

54. Universal Vise.—The milling-machine vise shown in Fig. 12 (*a*) can only be swiveled in a horizontal plane. Toolmakers, however, often have occasion to take cuts where a vise adjustable in a vertical plane would be not only very convenient, but would also allow the work to be held in a better manner than is possible if only a swivel vise is at hand. Such a vise is shown in Fig. 12 (*b*); it is known as a **universal** vise. The universal vise shown consists of three parts, which are the base *a*, the knee *b b*, and the vise *c*. The knee is made in two parts, which are hinged together; the lower part of the knee can swivel on the base and can be clamped thereto. The vise itself swivels on the upper part of the knee. The knee can be opened sufficiently to bring the vise vertical, and can be securely braced in any position by the bracing levers *d*, *d*, which are joined by a clamping bolt. This vise can be swung to almost any

position, and, consequently, its range of usefulness is greatly extended over that of the swivel-base vise.

55. False Jaws.—In all milling-machine vises, the jaws are faced with removable false steel jaws, as *f*, *f*, Fig. 12, which makes it an easy matter to substitute special jaws to hold special forms of work. Fig. 13 shows such a pair of special jaws, with the work *a* between them; it will be suggestive of other ways in which such jaws may be made. The false jaws *b*, *b* are fastened to the jaws of the vise by fillister-headed screws that fit the tapped holes *c*, *c*. These special jaws not only serve to hold work of a special form, but also support it close to the cut. Thus, in Fig. 13, the exposed top surface of the work is to be finished by a formed cutter; reference to the illustration shows the top of the false jaws to have been made to conform to the profile of the work, but clearing it slightly. The rigid support of the work prevents any springing and allows a wide cut to be taken with very little, if any, chattering.

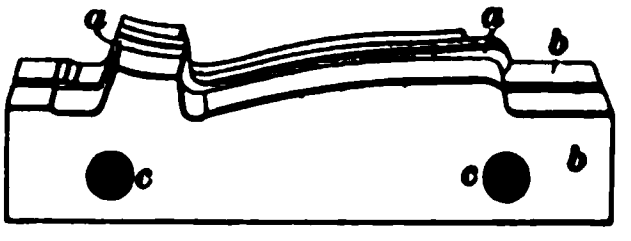

FIG. 13.

56. Setting the Vise.—There are two cases that arise in practice in setting a vise, which are: setting it at a given angle to the axis of the spindle, and setting it at a given angle to the line of motion of the table. In plain horizontal milling machines, the two cases do not differ in the least, since the construction of the machine insures that when the vise is set in respect to the axis of the spindle, it is also set correct for the line of motion of the table. In vertical milling machines, and also in universal milling machines, when the table is swung from its zero position, that is, when its line of motion is not at right angles to the axis of the spindle, the vise must be lined up with the line of motion.

57. Plain milling-machine vises as a general rule have two slots at right angles to each other cut in the bottom; tongues that fit a T slot of the table are fastened in these

slots and insure that the vise jaws are at right angles to, or in line with, the line of motion of the table. In horizontal machines in which the table cannot be swiveled, as in plain milling machines, and also in universal machines *when the table is set at zero*, the tongues insure that the vise jaws are either at right angles or parallel to the axis of the spindle, depending on the position of the vise.

58. Graduated swivel-base vises usually have the zero mark on the base so placed that when it coincides with the zero of the graduation, the jaws will be at right angles to the line of motion of the table. Hence, to set the jaws in line with the line of motion, make the 90° mark coincide with the zero mark.

59. There are various designs of swivel-base vises in use that have no graduations. In horizontal machines where the table cannot be swiveled, and in universal machines when the table is at zero, the vise may be lined so that its jaws are parallel to the axis of the spindle (at right angles to the direction of motion of the table) by

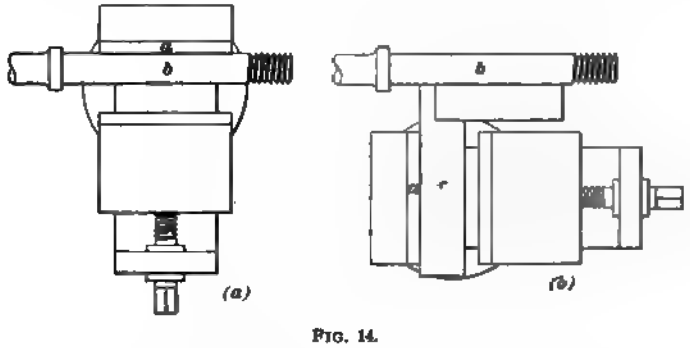

FIG. 14.

placing the fixed jaw *a* against the arbor *b*, as shown in Fig. 14 (*a*). To place the jaws at right angles to the axis of the spindle, apply a try square *c* to the fixed jaw *a* and the arbor *b*, as shown in Fig. 14 (*b*). To set the jaws at a given angle other than a right angle, apply a bevel protractor to the arbor and fixed jaw.

60. So far it has been supposed that the arbor runs exactly true. If this is not the case, the vise jaws must be set in a slightly different manner. Run back the table until one of the corners of the fixed jaw, as *b*, touches the arbor, as shown in Fig. 15 (*a*). Measure the amount of opening between the corner *a* of the fixed jaw and the arbor. Now give the spindle half a turn and move the table until the corner *a* is in contact with the arbor. Measure the amount of space between the corner *b* and the arbor;

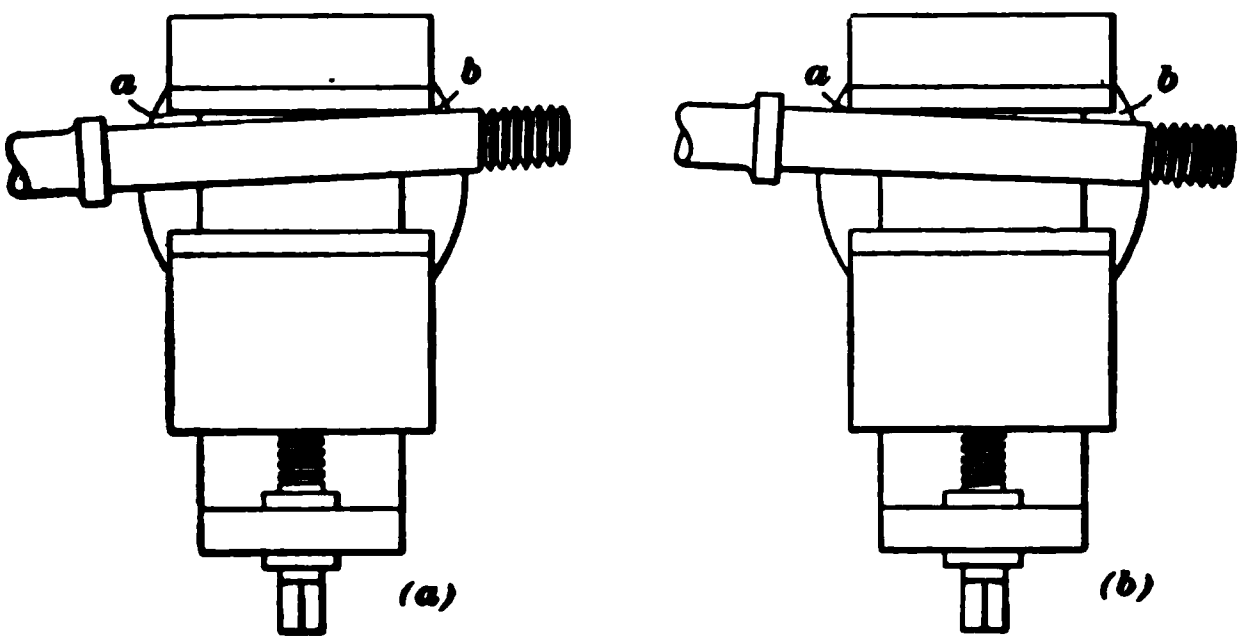

FIG. 15.

if this agrees with the first measurement, the vise is correctly set; otherwise, it must be shifted until the measurements do agree. The same operation may be used for setting the vise jaws square to the axis of the spindle, or at an angle.

It has here been supposed that the arbor is bent directly at the shoulder. When this is not the case, as, for instance, when the arbor has one or more short kinks in it, the method of testing the setting that has just been explained, should not be relied on. The proper thing to do is to procure a true-running arbor.

61. A swivel-base vise without a graduation, or a graduated-base vise that is to be tested for the correction of its zero mark, may be set with its jaws parallel to the line of motion of a vertical milling-machine table as follows: put an arbor in the spindle and move the table until the arbor *a*, Fig. 16 (*a*), is near one corner of the fixed jaw *b*. Put a

parallel strip of metal *c* between the arbor and the vise jaw, and by means of the cross-feed, move the vise toward the arbor until the feeling piece *c* just touches the arbor and the fixed jaw. Remove the feeling piece and then move the table in the direction of its line of motion, which is shown

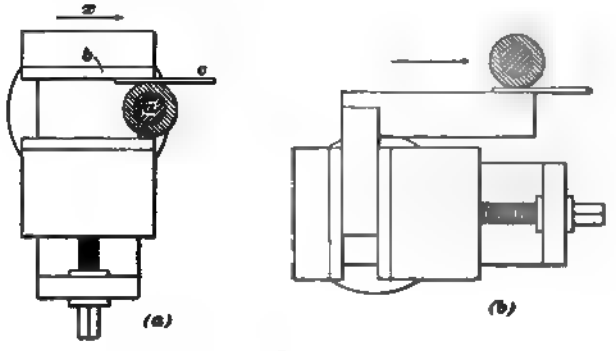

FIG. 16.

by the arrow *x*, until the arbor is near the opposite corner of the fixed jaw. Insert the feeling piece again and observe if it is in contact with the fixed jaw and arbor. If this is not the case, or when the feeling piece will not go in, the vise must be shifted and the testing repeated.

62. To set the vise jaws square to the line of motion, clamp a try square between the jaws and test along the blade, as shown in Fig. 16 (*b*). To set the vise to an angle when the base is not graduated, instead of the try square, use a bevel protractor set to the correct angle.

The method of setting a vise explained in connection with Fig 16 may also be used for horizontal milling machines, clamping a heavy bent piece of wire to the arbor and using its point for testing.

63. Holding Round Work.—The regular milling-machine vise is not well adapted for holding round work, owing to the fact that the jaws are in contact with such work only along one line. Hence, if the vise is tightened on the work, the jaws will mar it along the lines of contact.

If the vise is used for holding round work, the marring may be lessened, and, at the same time, the work may be held more firmly by placing strips of soft sheet copper or sheet brass between the jaws and the work.

64. When much round work is to be done in the vise, it will be found advisable to make a V-shaped false jaw, as is shown in Fig. 17, which will cause the work to be held along three lines of contact, as *a*, *b*, and *c*, and prevent it from tipping upwards or downwards when a cut is taken over its top surface. Strips of sheet brass may be placed between the jaws and the work to prevent marring.

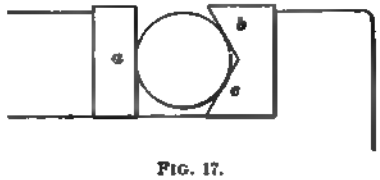

FIG. 17.

65. Split Vise Chuck.—When a large quantity of cylindrical work (all pieces having the same diameter) is

FIG. 18.

to have milling done on it after the cylindrical surface is nicely finished, the **split vise chuck** shown in Fig. 18 may be used. This is made from a rectangular piece of steel; it has a hole bored through it to fit the work and is split on top throughout the whole length. In use, the flat surface *a* is placed against the fixed jaw and the curved surface *b* against the movable jaw; the vise is then tightened somewhat and the chuck holding the work is seated fair on the bottom of the fixed jaw by tapping it lightly with a soft hammer. When this

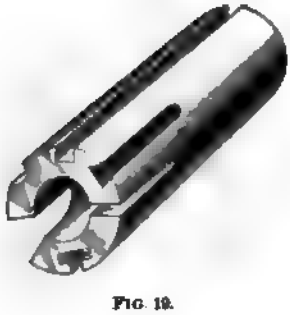
FIG. 19.

has been done, the vise is tightened again. The curved surface *b* allows a slight variation in diameter of the work, since it allows the chuck to easily adjust itself. At the same time, it insures a fair bearing of the flat surface against the fixed jaw. Fig. 19 is given as a suggestion of what work may be done on a cylindrical job held in a split vise chuck.

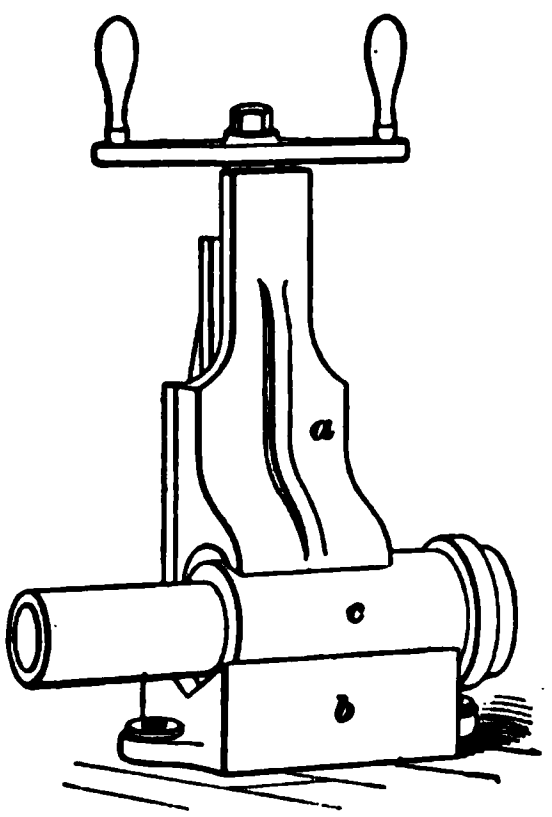

FIG. 20.

66. A Special Vise.—Plain milling machines are often used entirely for making simple cuts on cylindrical work; in such a case, a special vise may be used, as, for instance, the one shown in Fig. 20. In this vise, which may be made vertical, as, for instance, the one shown, when the character of the work makes it a more convenient design, the movable jaw *a* is flat and the fixed jaw *b* is V-shaped; hence, the work *c* will be automatically lined up and firmly held. The resemblance of the vise jaws to the special jaws shown in Fig. 17 should be noted.

HOLDING WORK WITH INDEX CENTERS.

67. Types.—Index centers are made in two types to suit different classes of work, which are known respectively as *plain* and *universal index centers*. Each manufacturer naturally has designs of his own for each type; they all embody the same general features, however, which are: a live spindle that can be rotated at will through a definite part of a revolution, and a tailstock carrying the dead center. The distance between the two centers is made adjustable to accommodate different lengths of work.

68. Plain Index Centers.—Fig. 21 shows one design of a set of plain index centers, which consists of an **index**

head *a* and a **tailstock** *b*. In this particular case, the tailstock forms part of the bedplate *b'*, and the index head is movable along this bedplate. In many designs, however, the index head and tailstock are not placed on a bed, but are clamped directly to the table of the milling machine; in that case they usually have tongues on the bottom that fit a T slot of the table and insure the proper alinement of the index centers. The headstock *a* carries the live spindle to which an index plate *c* is fitted. The back of the index plate has several concentric rows of holes, which are spaced equidistant in each separate row; an index pin *d* is inserted

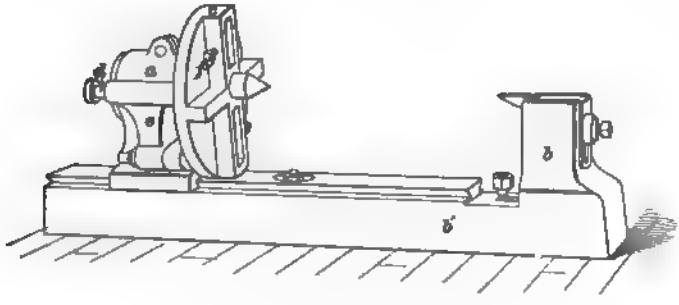

FIG. 21.

in a movable bracket *e* in such a manner that its pointed end may be made to engage with any row of holes. The holes in the index plate are used for obtaining divisions of the circle, that is, to indicate when the spindle has been revolved a given number of degrees. The divisions obtainable depend on the number of holes in the different rows; they are the quotients obtained by dividing the number of holes in each row by all the whole numbers by which it is divisible. In each case, the divisor shows how many holes the index plate must be moved for each division.

The spindle is placed in line with the dead center, and cannot be moved in a vertical plane. It carries a live center and a face plate that takes the tail of the dog used for confining the work; a setscrew *f* confines the tail of the dog. The dead center has a limited range of adjustment in line

with the axis to allow work to be placed and removed from between the centers without having to move the index head.

Some designs of a plain index head allow a universal lathe chuck to be screwed to the live spindle; this greatly increases the range of usefulness. Practically all designs allow the live center to be removed; an arbor or a collet may then be inserted for holding the work.

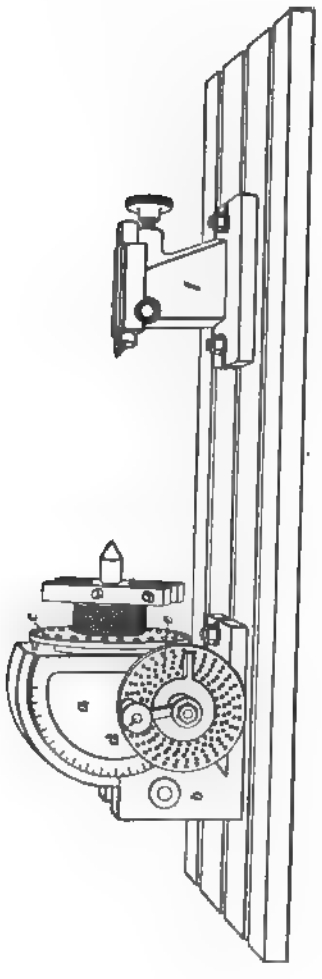

FIG. 21.

69. Universal Index Head. — Fig. 22 shows one construction of a universal index head. The chief point of difference from the plain index head is that the index-head spindle is movable in a vertical plane, and can be swung, according to construction, through an arc of from 110° to 200°. In the design shown, the head *a*, which carries the spindle, is mounted in a circular guide of the frame *b*, and may be rigidly clamped to it in any position within its range of movement. The head *a* is graduated into degrees, and a zero mark placed on the frame indicates, by its coincidence with a graduation mark, how many degrees the axis of the spindle deviates from its horizontal position. The tailstock *f* is bolted to the table, and is made movable in order to accommodate different lengths of work.

70. In this particular design, the spindle carries an index plate *c* with holes in it, which may be used for rapid indexing for the most commonly used divisions of the circle. A worm-wheel, which is inside of the head, is fastened to the live spindle; a worm, keyed to a shaft, meshes with this wheel. This shaft carries an index pin *d*, which can be made to engage with any of the concentric rows of holes of the index plate *e*, which is fastened to the head. The spindle is rotated by turning the worm-shaft by means of the index pin, which, when withdrawn from the plate, forms the handle of a crank.

Universal index heads are often constructed in such manner that the feed-screw of the table and the worm-shaft may be connected by suitable gearing; the spindle of the index head will then revolve at the same time that the table moves in a straight line, and the combination of these two movements will allow helixes and spirals to be cut. Such a universal index head is given the name of **spiral index head.**

71. Work Done Between Centers.—The work that is most commonly done between centers is the fluting of taps and reamers; the milling of the spaces of milling cutters; the cutting of small gear-wheels and sprocket wheels; the milling of squares on the end of cylindrical tools; the cutting of short keyways, and similar work.

72. Confining the Work.—Work held between the centers is caused to rotate with the spindle by a dog; to prevent any rocking of the work the tail of the dog must be confined by a setscrew, which is always fitted to the face plate or driver. When the tail cannot be confined with the setscrew, a wooden wedge may be driven in between the tail and the driver. Ordinary lathe dogs are not particularly well adapted for milling-machine work, since their tails will rarely come opposite the setscrew in the driver. A regular clamp dog will be found to be more satisfactory in all respects than the lathe dog, since not only will it not

mar the work as much, but it will also allow the tail to be brought opposite the setscrew on all kinds of work within its range.

73. Lining the Centers.—The construction of plain index centers insures that they are always in line. Universal milling-machine centers, however, require lining up in a vertical plane when a cut is to be taken parallel to the axis of the work. Their construction insures that a line joining the live center and the tailstock center will always lie in a vertical plane parallel to the line of motion; hence, no lining up sidewise is ever required, if their tongues are placed in a T slot of the table.

74. There are two cases that may arise in practice, which require a slightly different method of procedure to line the centers up to the same height. When the tailstock center is not movable in a vertical plane, as in the case of the tailstocks shown in Figs. 21 and 22, proceed as follows: Set the index head as closely as possible by the zero mark on the frame and the zero of the graduation on the head. Then place some piece of metal, as *a* in Fig. 23, one end of which has been turned to run true, between the centers, with the turned end toward the tailstock. Now adjust the pointer *p* of a surface gauge to just touch a feeling strip of paper placed on top of the turned end. Next, turn the piece *a* end for end, set up the tailstock center, and placing the feeling strip on *a* again, notice if the pointer will touch it. If it does not touch, it shows that the spindle has been depressed too much and requires raising; conversely, if the pointer will not pass over the piece, the spindle is too high.

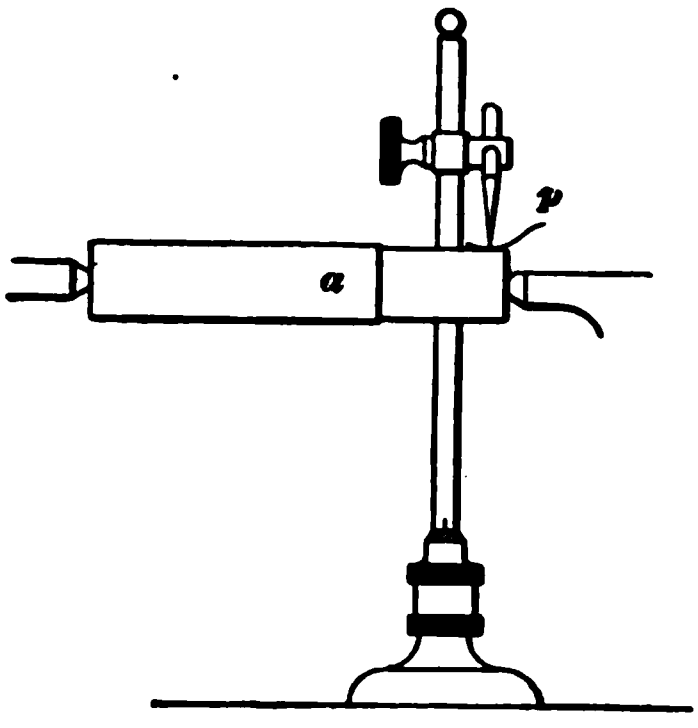

FIG. 23.

75. When the tailstock is so arranged that the dead center is movable in a vertical plane, set the index head to zero as accurately as possible. Now place a true-running milling-machine arbor in the index-head spindle (practically all modern milling machines have the same taper hole in the spindle and index-head spindle, and, hence, the arbor intended for cutters may be used) and adjust the pointer *p* of a surface gauge to just touch its top near the shoulder, as shown in Fig. 24. Shift the surface gauge to the end of the arbor; if the pointer just touches the top again, the index-head spindle is set parallel to the line of motion of the table. To adjust the tailstock center, use a piece as explained in connection with Fig. 23, placing its turned end toward the index head at first. Raise or depress the tailstock center until the pointer of the surface gauge shows it to be of the same height as the live center. When the centers are in line, the cut will be parallel to the axis of the work, no matter what kind of a cutter is used.

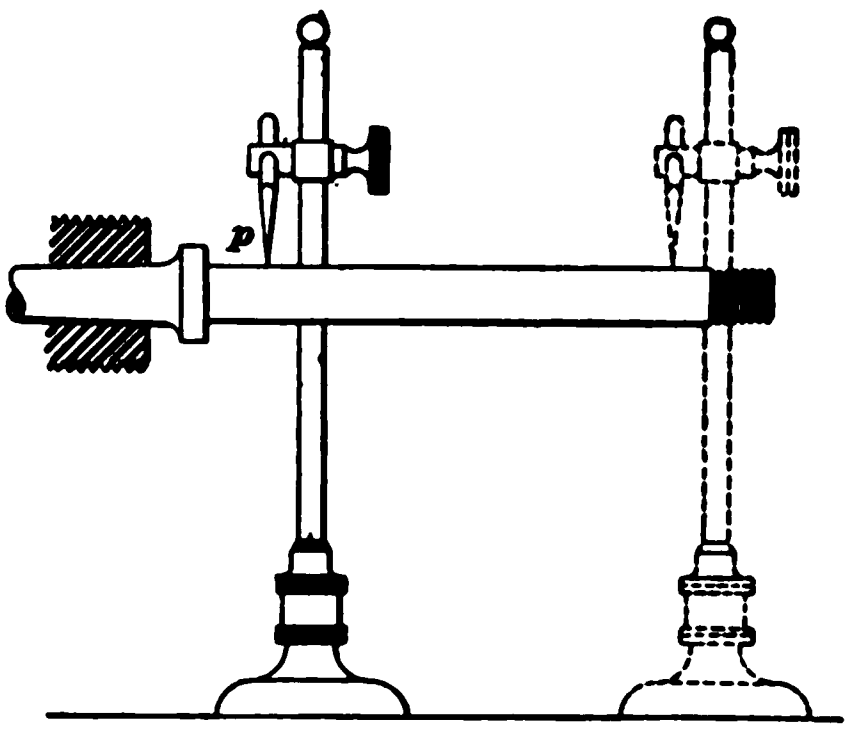

FIG. 24.

TAPER WORK BETWEEN CENTERS.

76. Cases Arising in Practice.—When cuts are to be taken at an inclination to the axis of work held between milling-machine centers, that is, when tapering work is to be milled, the work may be set to the required inclination in various ways depending on the construction of the milling-machine centers available.

The cases that may arise in practice are as follows: (*a*) Neither the index-head spindle nor the tailstock is

adjustable in a vertical plane, as is the case with the plain centers shown in Fig. 21. (*b*) The tailstock is adjustable in a vertical plane. (*c*) The index-head spindle may be swung in a vertical plane. (*d*) The index-head spindle may be swung in a vertical plane and the tailstock is adjustable vertically in the same plane. (*e*) The index-head spindle and the tailstock may be swung simultaneously in a vertical plane around the center of rotation of the index head.

77. Non-Adjustable Index Head and Tailstock. Taking up case (*a*), there are two ways in which tapers may be milled, depending on the kind of machine and milling cutter available. Using a horizontal machine and a plain cutter, the axis of the work *a*, Fig. 25 (*a*), may be brought to the required inclination to the line of motion *x y*, by packing up under one end of the bed *b'*, Fig. 21. This preserves the true alinement of the centers; that is, the axis of the index-head spindle coincides with the axis of the dead center irrespective of the inclination of the axis of the index-head spindle to the line of motion. When this is the case, the work will always revolve in perfect unison with the spindle; that is, the angular movements of the spindle and work will always be alike, in consequence of which, it is possible to divide tapering work into even divisions. There is no axial movement of the tail of the dog during the revolution of the work, and there is no cramping and springing.

78. When plain centers are used for a vertical milling machine and an end milling cutter is employed, the adjustment is identical with the one just described. When a plain cutter is to be used in a vertical milling machine, or an end mill in a horizontal machine, the centers must be shifted sidewise; that is, they must be moved in a horizontal plane until the horizontal angle between the axis of the work and the line of motion of the table is equal to the desired angle. When the bed of the centers has tongues fitting a T slot of the table, it will be necessary to interpose parallel bars between the table and the bottom of the bed.

79. Raising the Tailstock.—Case (*b*) usually occurs with plain centers that are fastened directly to the table, and when using a face cutter in a horizontal milling machine, or an end mill in a vertical machine. The axis of

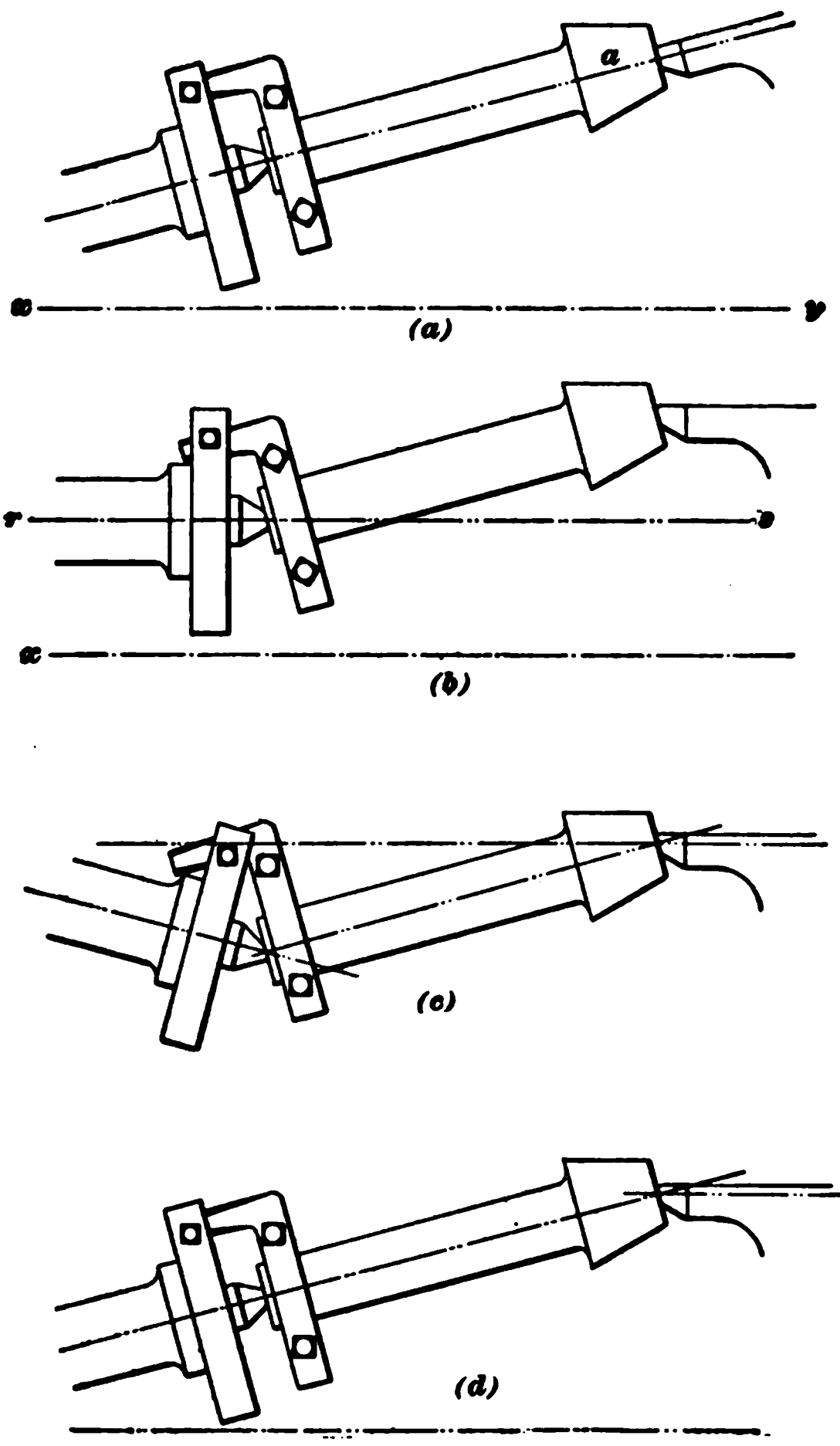

FIG. 25.

the work is then often given the required inclination by blocking up either the index head or the tailstock with suitable packing blocks. The position of the centers in that

case is shown in Fig. 25 (*b*). Now, in packing up with parallel packing blocks, the axis of rotation *r s* of the spindle remains parallel to the line of motion *x y* of the table, but the axis of the work and spindle are at an inclination to each other. This condition is equivalent to that existing in lathe work when taper turning is done with the tailstock center set over, and the same trouble is experienced as in lathe work; that is, the angular movements of the spindle and work are not equal. In other words, with the centers out of line, it is not possible to obtain even divisions of the work with even indexing. The trouble is intensified by the fact that the tail of the dog in milling-machine work requires to be confined with a setscrew. If the different positions of the tail during one revolution of the work be observed carefully, it will be seen that it not only slips to and fro in the slot of the driver, but it also has a rocking motion at the same time. Now, if the spindle is revolved while the setscrew is set against the tail, the latter will be cramped, and either must bend or the work must spring. For this reason, whenever work held between centers that are not in line with each other is revolved, the setscrew should be loosened before revolving the index-head spindle and tightened again on the completion of the movement. While this will prevent springing of the work, it will *not* insure even divisions.

80. When plain centers or universal centers intended to be fastened directly to the table are to be used in a horizontal machine for taper work where the cutting is to be done by an end mill, or by a plain mill in a vertical machine, the centers must be shifted sidewise; i. e., in a horizontal plane, until the line joining them makes the required horizontal angle to the line of motion of the table. For this purpose, raising blocks, if available, may be used; in the absence of such blocks, the centers may be blocked up on parallel bars. In order to obtain even divisions, place the tailstock center so that it coincides with the axis of the index-head spindle. Instead of fastening the centers separately to the table, it will be found much better to have them attached to a

temporary bed, which insures their always being in line, and swivel the bed upon the table.

81. Adjustable Index Head.—Case (*c*) occurs with some designs of universal index centers, where the tailstock is not adjustable in a vertical plane, and when the work is done with a face cutter in a horizontal machine, or an end mill in a vertical machine. The index head is then raised or depressed to suit the taper. All that can be said for this method is that it still further aggravates the evils of unequal spacing and cramping of the dog. Comparing equal tapers, case (*c*) will give errors slightly more than double those due to case (*b*). Whenever the nature of the work allows it at all, it is best to place the work between the centers so that the index-head spindle is raised above a horizontal plane; the tailstock can then usually be blocked up by packing blocks or parallel bars until the axis of rotation of the index-head spindle coincides with the dead center, as shown in Fig. 25 (*d*). When this is done, even divisions will be obtained and there is no cramping of the dog or springing of the work. The only objection to the use of a parallel packing block, or parallel bars, for raising the tailstock is that the dead center will not have a fair bearing in the countersink of the work. When conditions permit, a tapering packing block may be made in order to overcome this trouble.

82. Adjustable Index Head and Tailstock.—When the tailstock center is adjustable in a vertical plane independently of the live center, which is case (*d*), the tailstock center may be raised until it coincides with the axis of rotation of the spindle. Even divisions may then be obtained.

83. Taper Attachment.—Case (*e*) involves a special construction of the index centers ; Fig. 26 shows the design that has been adopted by the Brown & Sharpe Manufacturing Company for this purpose. In this device, the live center *a*, which fits the tapering hole of the index-head spindle, has a large cylindrical collar in front that closely fits a bored

hole in an arm of the bed *b*. The tailstock *c* is mounted on this bed in such a manner that it can be moved along to accommodate different lengths of work; the construction of the bed insures that the dead center is always in line with the axis of rotation of the live center. In use, the live center is driven home in the index-head spindle; the index head is then raised until the required inclination has

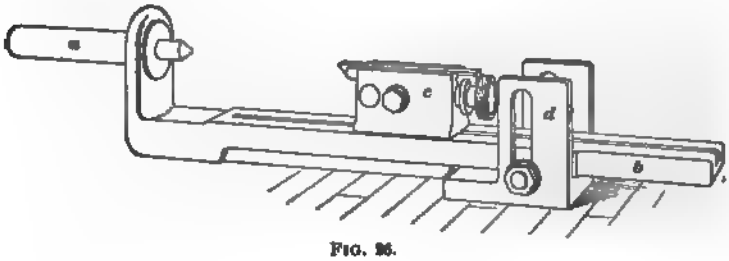

FIG. 26.

been reached and the free end of the bed, which swings with the index head, is tied to the table by clamping it to the bracket *d*. This bracket has previously been bolted to the table. The device shown insures that the axis of rotation of the live center always coincides with the dead center, and, consequently, even divisions may be obtained.

84. Precautions to be Observed.—The precautions to be observed in milling taper work between centers when even divisions are to be obtained may be summed up as follows: *the axis of rotation of the spindle and the axis of rotation of the work must coincide.* When this condition is not attainable, it is impossible to obtain even divisions. When the angle of inclination is small, the errors of division will be very small; they will rapidly increase, however, for any increase of the inclination.

85. It is to be noted that with a constant difference of elevation between the centers, the angle of inclination of the axis of the work to the line of motion of the table in cases (*b*), (*c*), and (*d*) will vary for different lengths of work, and, hence, the tailstock center must be moved up or down for different lengths of work if the angle of inclination

is to be kept constant. In cases where the two centers are attached to a separate bed that preserves their alinement, and where the bed is then inclined or swiveled, as in case (*a*) or (*e*), for instance, the angle of inclination to the line of motion is not affected by the distance between the centers; i. e., by the length of the work. In case (*c*), it is to be further noted that no attention must be paid to the graduation marks of the index head ; these do not show the angle of inclination between the axis of the work and the line of motion of the table. In case (*d*), however, the graduations will correctly indicate the angle of inclination, but only when the tailstock center has been raised enough to make the axis of rotation of the index-head spindle and work coincide. As far as case (*e*) is concerned, the construction insures that the graduation marks correctly indicate the inclination.

86. Milling-Machine Dog.—In Art. **79** it was mentioned that the tail of the dog will cramp badly when taper work is done with the centers set out of line. The dog shown in Fig. 27 (*a*) overcomes this trouble entirely; it requires a pair of special driving jaws to be attached to the regular driver or face plate. Referring to the figure, it

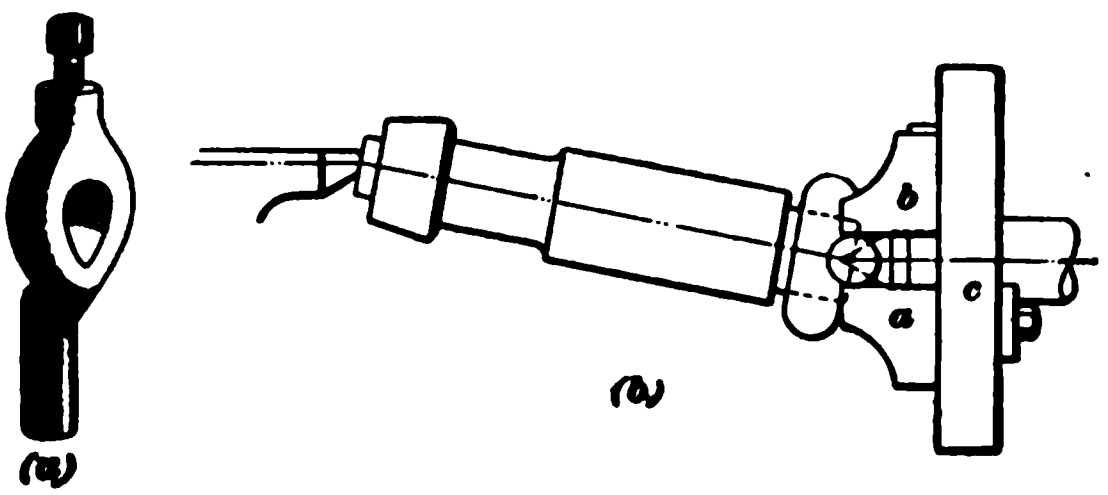

FIG. 27.

is seen that the dog has an offset cylindrical tail that is placed between the special jaws *a* and *b*, as shown in Fig. 27 (*b*). The jaw *a* is bolted to the face plate *c* and carries a small slide to which the movable jaw *b* is clamped. In use, the dog is placed on the work so that the axis of the tail is about flush with the end of the work. The tail is

now placed in contact with the fixed jaw *a*, and the movable jaw *b* is pushed against it and locked. Owing to the construction, the dog can rock freely during the revolution of the work and there is a complete absence of cramping or bending of the work. This kind of dog produces less error in dividing work than the bent tail-dog; it will not, however, as is commonly claimed, allow even divisions to be made while the centers are out of line.

87. Lining the Centers for Taper Work.—As previously stated, when even divisions are to be produced on work done between centers, it is absolutely necessary that the centers be in line; that is, the axis of rotation of the work and of the index-head spindle must coincide. The shifting of the centers to bring them into alinement is a matter that naturally depends on their construction and the conditions of each case, and no general direction that could be given would be of the same value as the exercise of a little judgment. Their correct alinement may be tested in various ways; one of the simplest and most accurate methods is here given, which has the advantage that it requires no special tools whatsoever, is rapid, and does not call for the exercise of any special skill.

88. Place the work *a*, Fig. 28, between the centers with a clamp dog mounted on it. Revolve it until the tail of the dog is on top and in the vertical plane passing through the axis of the work. Now adjust the dog until the end of the tail will just touch a feeling piece *b* placed between it and the driver *c*. This feeling piece may be a strip of tin, paper, brass, etc. Remove the feeling piece and give the index-head spindle one-half turn, thus bringing the spot on the driver that was opposite the end of the tail to the bottom. Revolve the work one-half

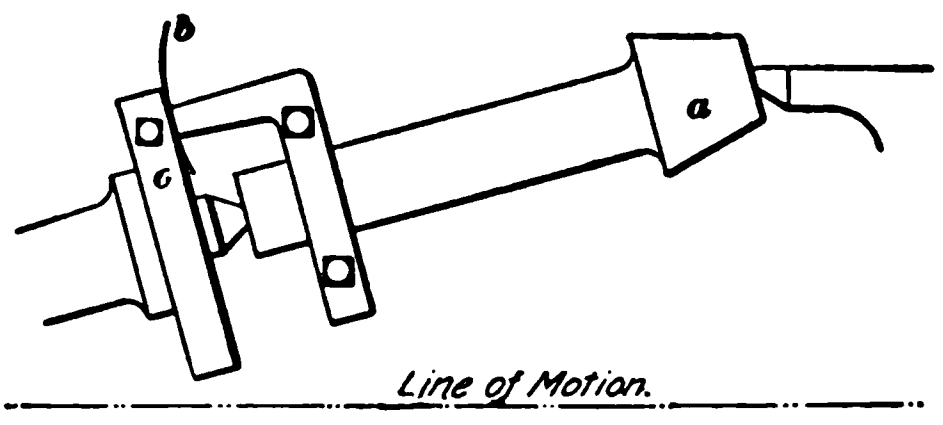

FIG. 28.

revolution and observe if the feeling piece will go between the driver and the dog. If it does not do so, the tailstock center is too low; if it enters freer than it did in the first position, the tailstock center is too high, and if it just goes in with the same degree of tightness that it did in the first position, the centers are in line in a vertical direction. To test their alinement sidewise, place the driver and dog into their two horizontal positions and apply the feeling piece in each position. If for any reason the work itself cannot be used, a mandrel of the same length as the work may be employed instead. In that case, the size of the centers in the mandrel must be the same as that of the centers of the work.

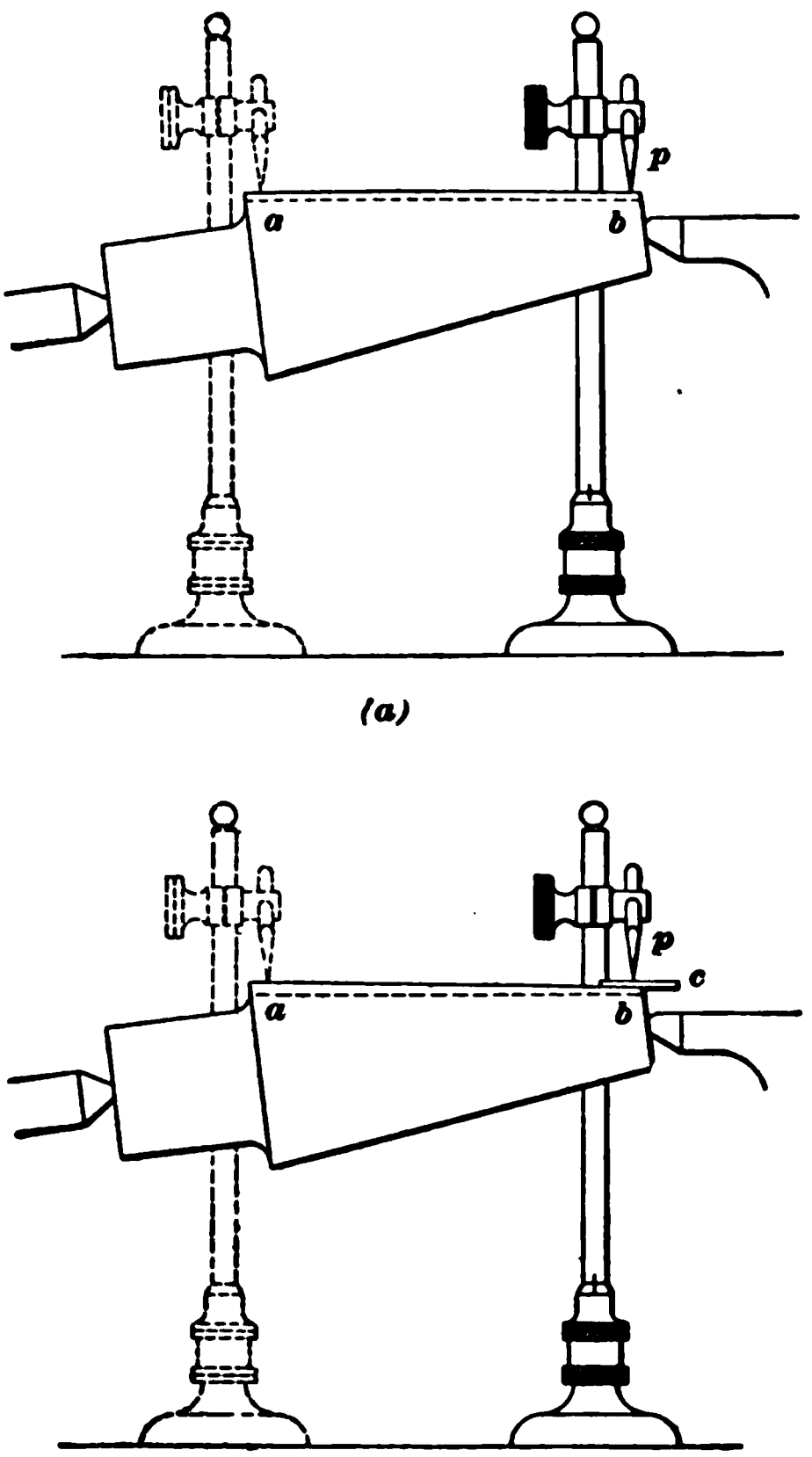

FIG. 29.

89. Setting Taper Work.— The cases that arise in practice in milling taper work between centers require the cut to be taken either parallel to the surface of the work or at an inclination to it. When setting the centers so that the cut, the depth of which is represented by the dotted line *a b* in Fig. 29 (*a*), will be parallel to the surface of the

work, a surface gauge may be employed for testing when using a horizontal milling machine and a plain cutter, or a vertical milling machine and an end mill.

90. The work having been placed between the centers, these are adjusted by eye until the top of the work appears about parallel to the surface of the milling-machine table. The pointer *p*, Fig. 29 (*a*), of a surface gauge is then adjusted to just touch the work at one end ; the gauge is now shifted to the other end, into the position shown in dotted lines, and it is noted if the pointer is again in contact with the work. If it does not touch, it shows that the work must be raised at the left end, or the right end must be depressed. After shifting, the testing is repeated until the surface gauge shows the work to be parallel to the line of motion.

91. When the cut is to be deeper on one end than at the other, as indicated by the dotted line *a b* in Fig. 29 (*b*), the setting may be tested by a surface gauge and an auxiliary test piece *c*. This test piece should be a very narrow strip of metal whose height is made equal to the difference in the depth of the cut at the two ends. Place the block on top of the work, holding it parallel to the table and set the pointer *p* of a surface gauge to touch it. Then shift the surface gauge to the other end and note whether the pointer touches the work. If it does touch, the work is correctly set; otherwise, it must be shifted and the testing repeated.

92. When using a plain cutter in a vertical machine, or an end mill in a horizontal machine, the surface gauge cannot be readily used for lining the work. In these cases, a pointer may be clamped to the spindle, or one of the cutting edges of the cutter itself may be used for testing the setting, traversing the work past the selected testing point by moving the table. In the case of a plain mill used in a horizontal machine, or an end mill used in a vertical machine, the setting may be tested by the cutter; but, as a general rule, it is more convenient to use a surface gauge in the manner explained.

93. On some classes of work, as, for instance, when a bevel gear is to be cut between centers, the angle that the cut makes with the axis of the work is given. With a universal head, raise the index head until the graduations indicate the given angle; now place the work between the centers and raise the tailstock until it is in line, testing by means of the method described in Art. **88.** When a special attachment like that shown in Fig. 26 is used, the testing is superfluous; all that is required is to set the index head to the given angle.

94. When the centers are to be set sidewise to a given angle, as occurs when using them in a horizontal machine

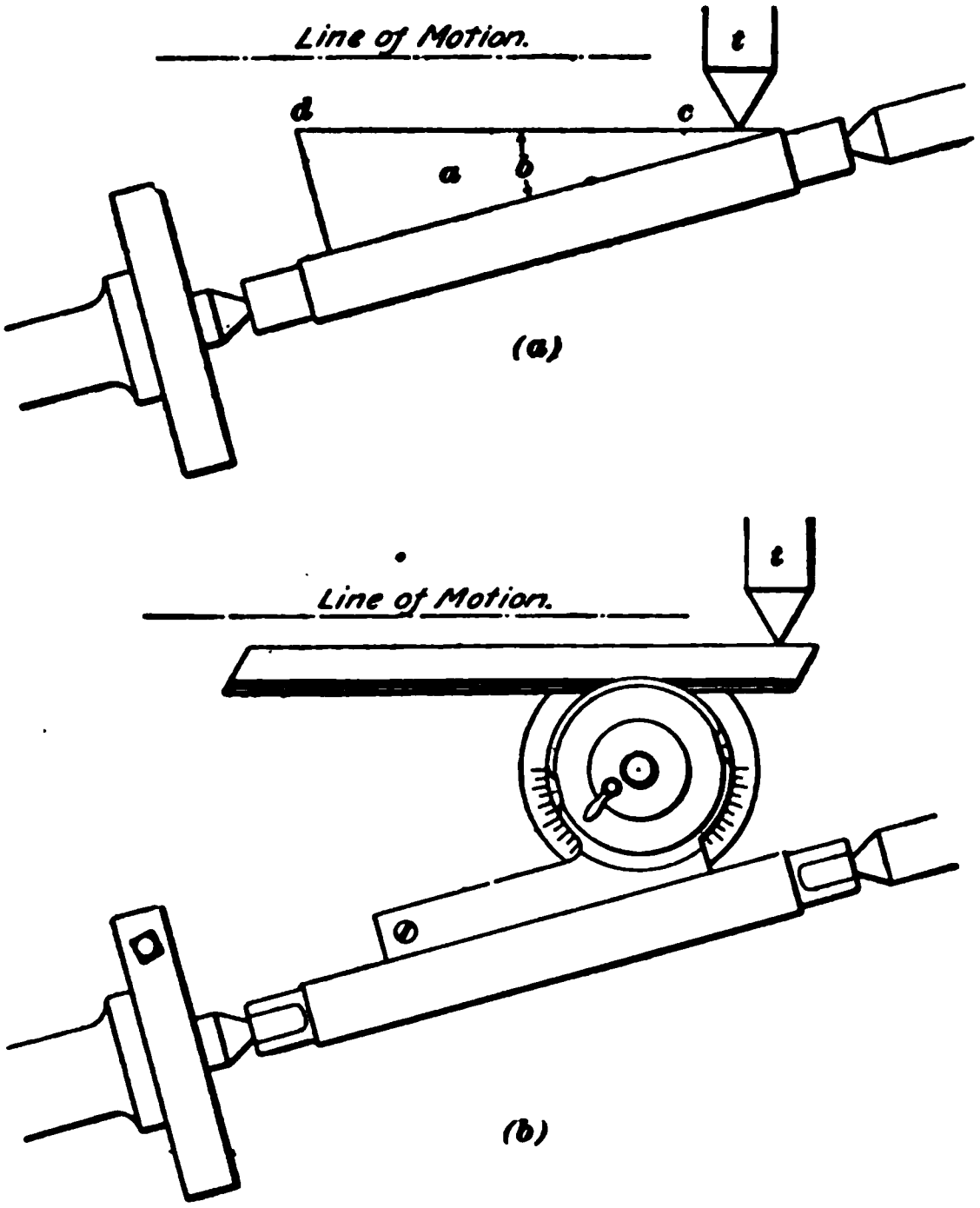

FIG. 80.

with an end mill, or a vertical machine with a plain mill, there are usually no graduations available by which to set

the centers. Various expedients may then be adopted. For instance, a piece of tin, as *a*, Fig. 30 (*a*), may be cut so that the angle *b* equals the given angle. This is then placed against a cylindrical mandrel held between the centers, which are now shifted until a traversing of the table past the stationary testing point *t* shows the side *c d* of the triangle *a* to be parallel to the line of motion of the table. The testing point may be a piece of wire clamped to the spindle.

95. When a bevel protractor of the type shown in Fig. 30 (*b*) is available, it may be set to the required angle and placed against a cylindrical mandrel held between the centers. Their setting may then be tested by traversing the table, and, hence, the blade of the bevel protractor, past a stationary testing point *t*.

96. When the two centers are mounted upon a bed, this bed will usually have some vertical surface that is parallel to a vertical plane passing through the centers. In that case the bevel protractor or the tin triangle may be applied to that surface, instead of to the mandrel, observing the necessary precaution of holding the instrument used parallel to the surface of the milling-machine table.

MILLING-MACHINE WORK.

(PART 3.)

USE OF MILLING MACHINE.

HOLDING WORK IN A CHUCK.

1. Milling-Machine Chuck.—As a general rule, the chuck used in milling-machine work is a self-centering lathe chuck that is fitted to a face plate screwed to the index-head spindle. For holding small cylindrical work, a high-grade self-centering drill chuck of the Almond or Beach type may be fitted to a shank that fits the hole of the index-head spindle. Regular independent-jaw lathe chucks may be used for the index-head spindle; these have the advantage that work held in them can be trued up until its axis coincides with the axis of rotation of the spindle. It is rarely advisable, however, to fit an independent-jaw chuck to the index head unless the milling-machine spindle is threaded the same as the index-head spindle; the chuck can then be screwed to the milling-machine spindle and the work there trued up easily. After truing, the chuck is transferred to the index head. It is a very tedious job to true work in a chuck while on the index-head spindle, except in those machines which are provided with means for disengaging the worm and worm-wheel.

2. Self-centering drill chucks, if of a high grade and carefully fitted, can be relied on to hold work within their

Copyright, 1901, by THE COLLIERY ENGINEER COMPANY.
Entered at Stationers' Hall, London.
All rights r---

capacity very true; they will also stay true for a long time if used with a reasonable amount of care. Self-centering lathe chucks, even though made with the greatest of care, will rarely hold work so that its axis coincides with the axis of rotation; in spite of careful use, they will soon wear still further out of true. For this reason, it is not advisable to use a self-centering lathe chuck for work that requires cuts to be very true in respect to its axis; when this is considered essential, the work should be trued up in some other manner, as, for instance, by clamping it to a true-running arbor or similar device.

3. Examples of Chuck Work.—There is a great variety of work that can advantageously be done with the piece held in a chuck, among which may be mentioned the milling of squares on the ends of taps and reamers, the cutting of axial grooves on work too long to go between the centers but small enough to pass through the index-head spindle, milling out the spaces of spring dies and hollow mills, and similar work. A few examples are here given, which will act as suggestions as to the class of work and the kind of cuts for which the chuck is adapted.

4. Grooving Work Held in Chuck.—Fig. 1 is a front view, looking in the direction of the line of motion of the table, of one style of an index head, which carries the three-jawed chuck *a*, in which the work *b* is held. A straight groove having a rectangular cross-section is to be milled in the work to take a feather; in other words, the work, which may be assumed to be a shaft, is to be splined for a part of its length. When the groove is to terminate in the manner shown in Fig. 2 (*a*), an end mill *c* would have to be used, as

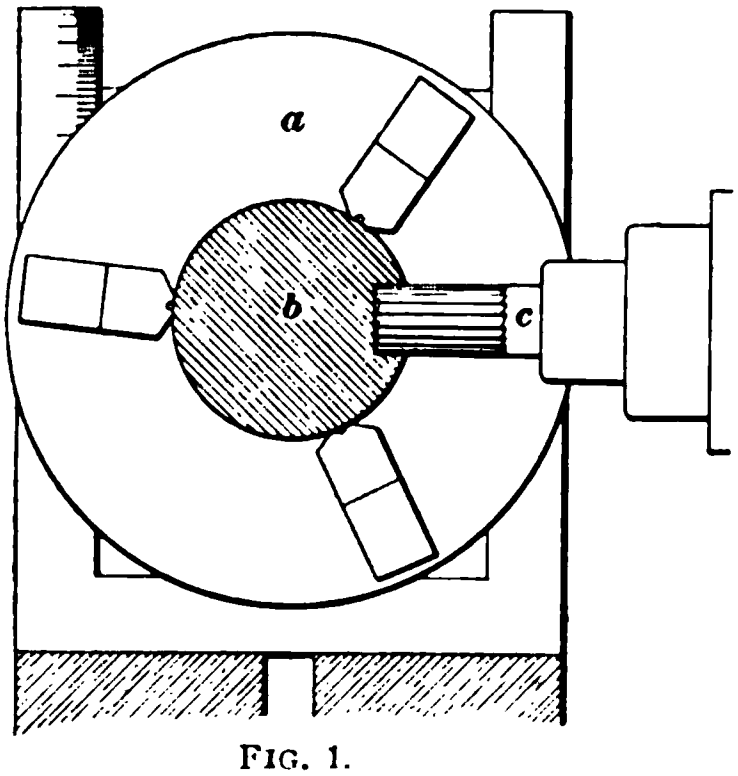

FIG. 1.

shown in Fig. 1. When such a groove is to begin at some distance from the end, a hole slightly smaller than the finished width of the groove should be drilled where the groove is to start; this hole should have the same depth as the groove, and will make it easier to sink the end mill into the metal. Some workmen prefer to drill a hole where the groove is to terminate, but there is no particular advantage to be derived from this practice. If it is done, it is recommended to drill this hole considerably smaller than the width of the groove, in order to allow the end mill to finish the groove nicely.

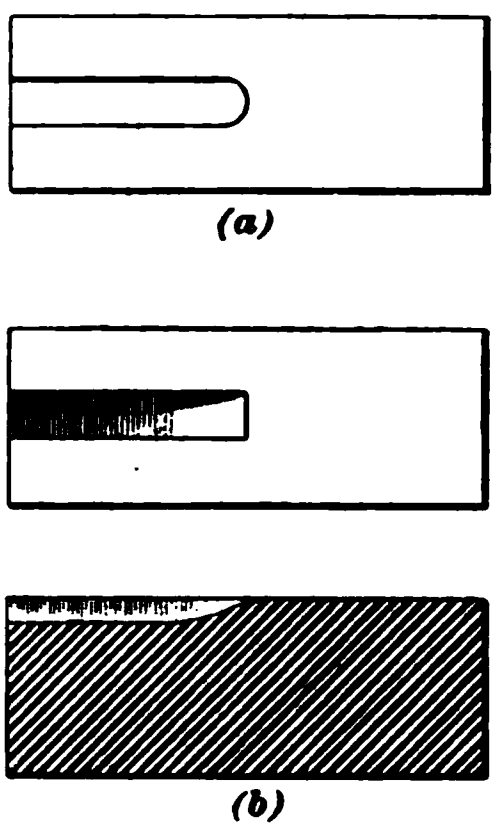

FIG. 2.

5. When the character of the work demands that the groove terminate in the manner shown in the top view and longitudinal section in Fig. 2 (*b*), a plain cutter must be selected. In that case (for a horizontal milling machine), the cut would be taken on top of the work, as shown in Fig. 3. When a groove like that shown in Fig. 2 (*b*) does not begin at the end, it can be easily cut by dropping the cutter into the work; no hole need be drilled and no chipping out is required, as the plain cutter will easily clear itself of chips.

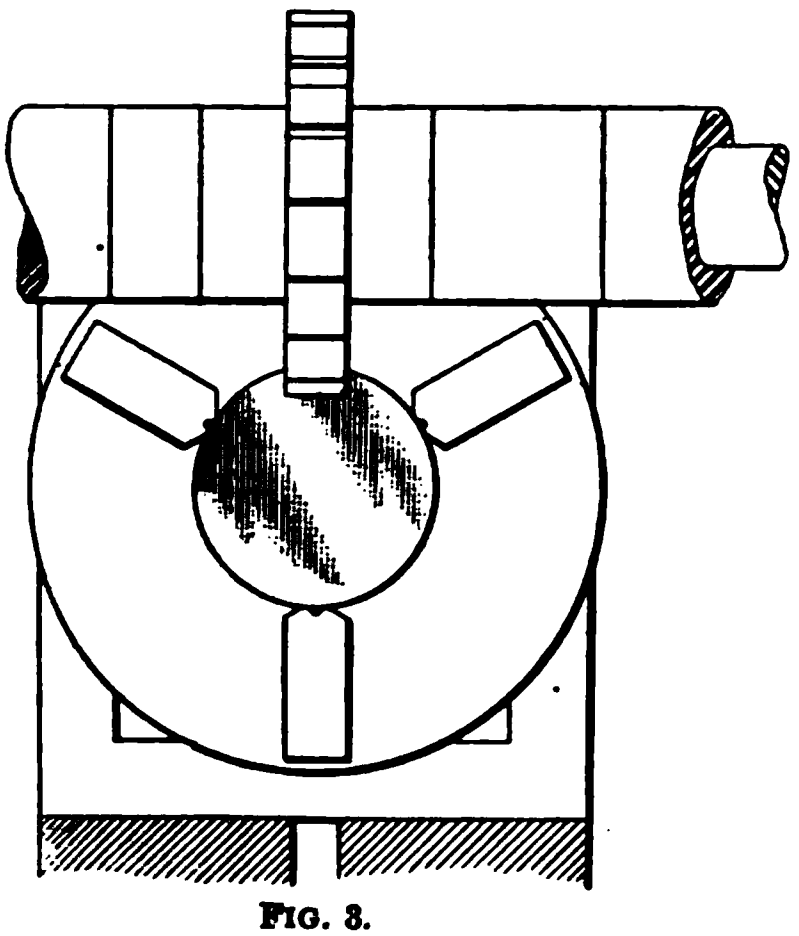
FIG. 3.

6. Milling Polygons.—When milling a square, or any other polygon, on the end of round work held in the chuck, the way in which the cut is to terminate will determine the

kind of cutter to be used and the direction of the feed. For instance, when a horizontal machine and a plain cutter are used, with a direction of feed as indicated by the arrow *x* in Fig. 4 (*a*), the cut must be taken over the top of the work, and will terminate in a curved shoulder having a radius of curvature equal to the radius of the cutter. For some work, this may be a decided advantage, as, for instance, when milling a punch, since this way of terminating the cut will leave the punch very strong and greatly reduce its liability to crack in hardening; for other work, again, it may be a decided disadvantage. Thus, assume that the square at the end of a tap was cut in the manner illustrated in Fig. 4 (*a*). Then, the tap wrench will jam on the curved shoulders and become difficult to remove. In this case, it is better to terminate each flat with a shoulder; this may be done by using an end mill or a side mill, feeding in the direction of the arrow *x* in Fig. 4 (*b*).

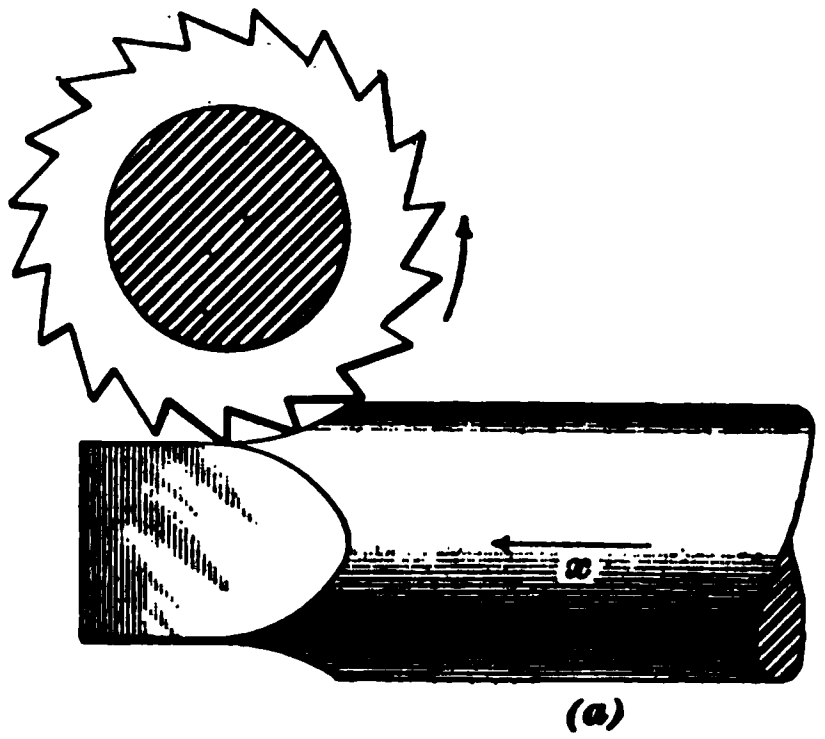

FIG. 4.

7. When conditions permit a cut to terminate in a shoulder curved as shown in Fig. 4 (*c*), the milling may be done with an end mill, a side mill, or a pair of side mills used as straddle mills, feeding in the direction of the arrow *x*. In that case, the axis of the work should intersect the axis of rotation of the cutter. Comparing squares and cutters of equal size, it will be found that a square made as in Fig. 4 (*c*) can be finished in a fraction of the time that is required for finishing it in the manner shown in Fig. 4 (*b*). The reason is to be found in the difference in the distances the cutter has to travel in order to complete the cut; the distance to be traveled by the cutter is least when milling as shown in Fig. 4 (*c*).

8. Circular Chuck Work.—Fig. 5 is a suggestion of what may be done in the way of circular milling, using in this case a horizontal machine and an end mill. The work is shown to an enlarged scale in Fig. 5 (*a*); it is required to finish the curved surface *a*, and also the rest of the face. This may be done by holding the stem *b* of the work in the chuck and using an end mill, as shown in Fig. 5 (*b*). For finishing the curved surface, the axes of rotation of the cutter and of the work should not intersect, but the axis of the cutter should be below the axis of the work a distance at least equal to the radius of the central hole in which the

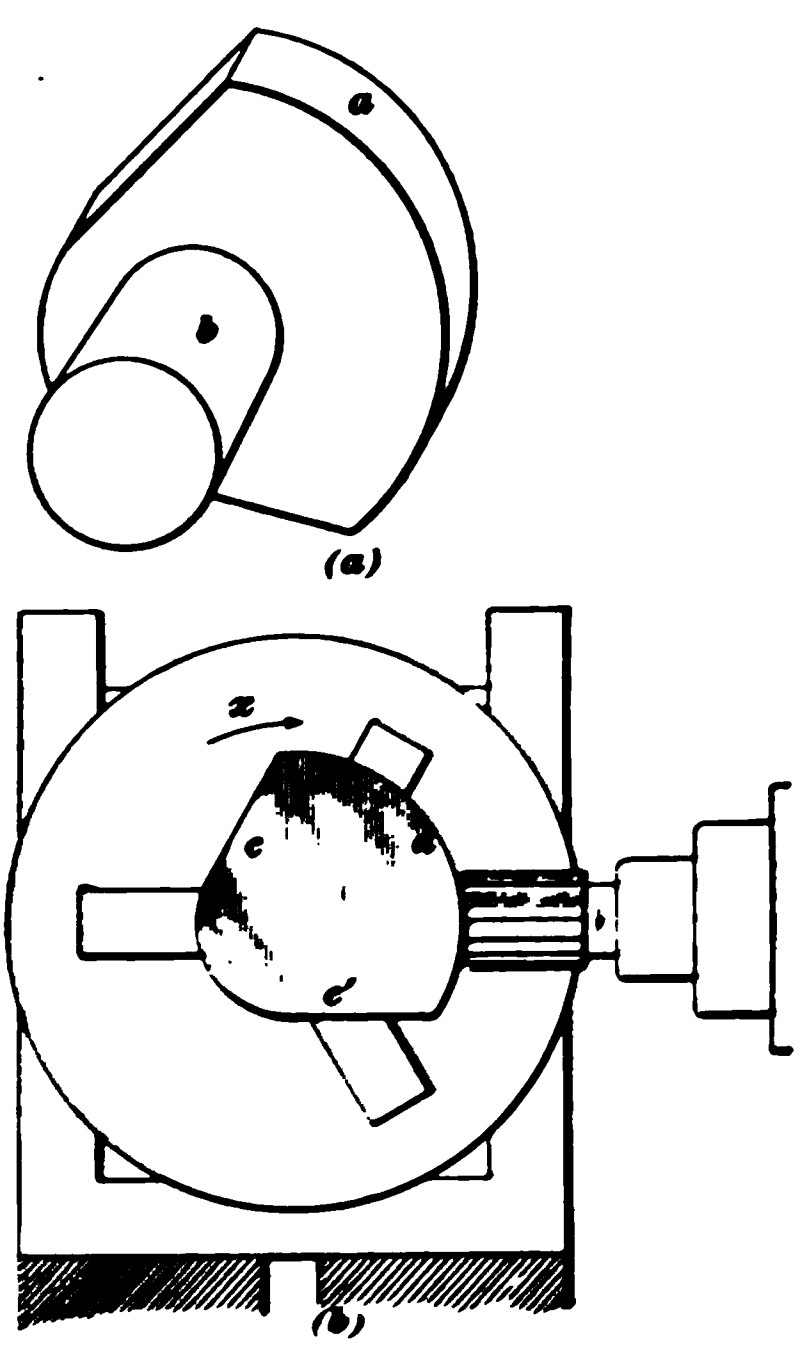

FIG. 5.

teeth of an end mill terminate. When cutting the curved surface *a* of the work, the feeding is done by rotating the index-head spindle in the direction of the arrow *x*. As soon as the cutter has passed clear over the curved surface, the knee of the milling machine is raised; the work is then rotated until the face *c* is vertical.

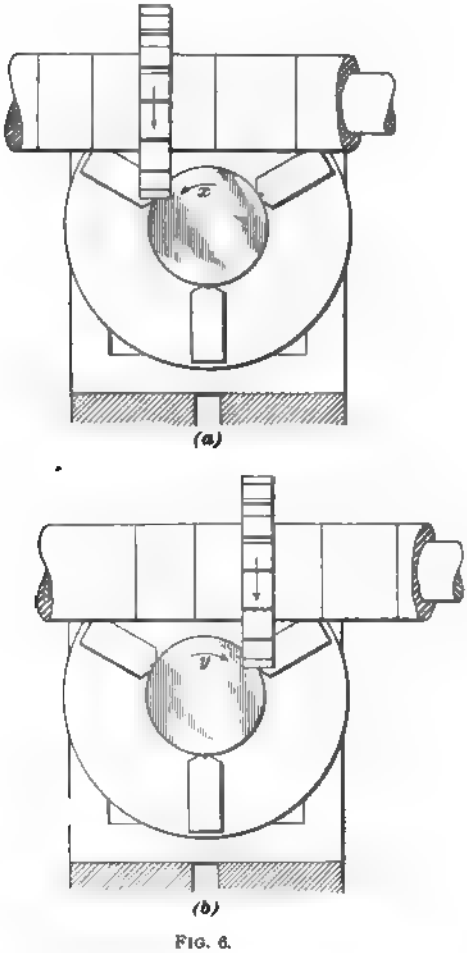

FIG. 6.

By means of the cross-feed screw, the table is fed toward the cutter until the required depth of cut is reached; the feeding is then done by lowering the knee until the curved part of the work is reached The index-head spindle is now slowly rotated in the direction of the arrow *x* until the side *c'* comes vertical; the knee is then fed upwards until the cutter has passed over *c'*, which completes the milling of the work.

The method of finishing the piece shown in Fig. 5 (*a*) that has just been explained is not given as the only way in which this job can be done, nor is it claimed to be the best way. It is given merely for the purpose of suggesting

to the operator the character of work that may be done in this manner

9. Precautions.—When cuts are to be taken at one side of the center on work held in the chuck, it should always be the aim to select the cutter or arrange the machine so that the pressure of the cut will not unscrew the chuck from the spindle.

Suppose a cut is taken as shown in Fig. 6 (*a*), and that the chuck is screwed on with a right-hand thread. Then, the pressure of the cut will tend to rotate the chuck in the direction of the arrow *x*, that is, left-handed; this will unscrew the chuck. For making the cut, the cutter should occupy the position shown in Fig. 6 (*b*); the pressure of the cut will then tend to rotate the chuck in the direction of the arrow *y*, and thus tend to screw it home more firmly.

10. It is not always possible to select the cutter or arrange the machine so that the pressure of the cut will not tend to unscrew the chuck. A good example of this is the hollow mill shown in Fig. 7, which is extensively used in turret-lathe and screw machine work. Such mills, as a general rule, cut right-handed, the term *right-handed* being

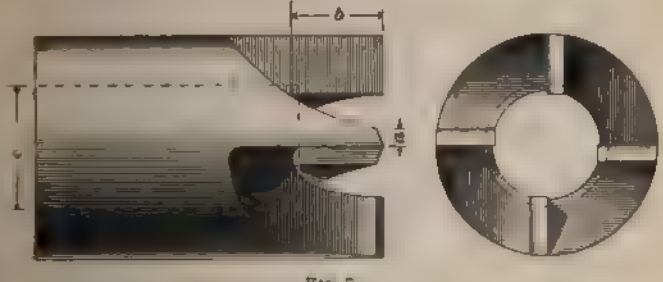

FIG. 7

applied to this mill in accordance with the practice existing in regard to milling cutters. It can readily be seen that in milling out a hollow mill in order to form the cutting edges, the cut must be taken to the left of the center, or as in Fig. 6 (*a*). Now, if the chuck is screwed on with a right-handed thread, there is a tendency to unscrew the chuck,

which is quite pronounced on account of the width and depth of the cut. For this reason, special care is required to jam the chuck firmly against the shoulder on the index-head spindle, when the thread is right-handed, and great care must also be exercised when taking the cut. It sometimes is possible to block the chuck by putting a jack under one of the jaws, and this should be done whenever circumstances permit. When a chuck that is fitted to the index-head spindle by a shank is available, and is of sufficient size, it should be used in preference to a screwed chuck.

11. Angular Cuts.—Cuts may be made at an angle to the axis of work held in the chuck by inclining the universal head, as shown in Fig. 8. A great variety of work can thus be done, as, for instance, milling the teeth on the end of end mills, or the teeth on the sides of solid side mills, milling bevel gears, etc. Some varieties of work can advantageously be held in the chuck, while others can be done more readily and accurately by using some other holding device, as an arbor, for instance.

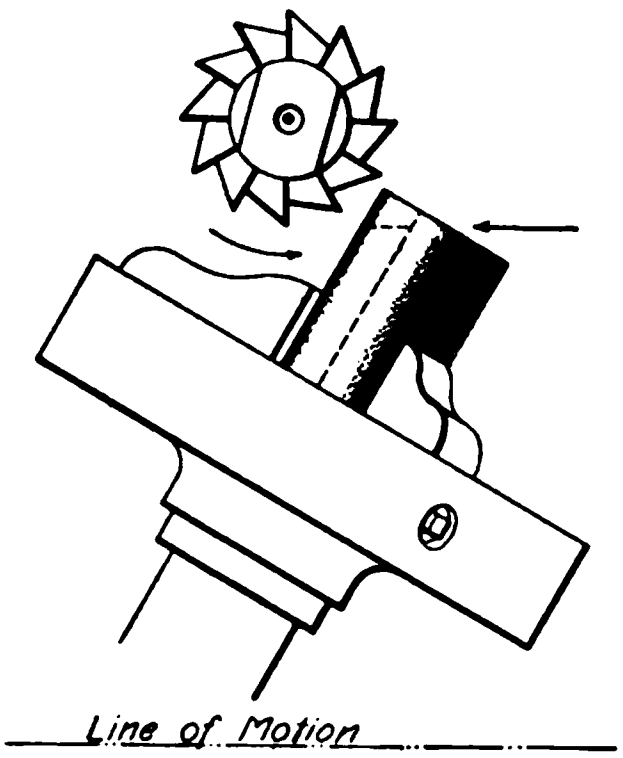

FIG. 8.

12. In order that the chuck jaws may not cut into the surface of finished work, strips of soft copper, brass, or sheet tin may be placed between the jaws and the work. When using the chuck, the work should project as little as circumstances permit, both in order to get a fair bearing of the jaws and also to reduce the spring of the work during the cutting operation.

ARBORS FOR INDEX-HEAD USE.

13. Milling-Machine Arbor.—Arbors that are to be used in the index head may be made in many different ways to suit the nature of the job. For holding saw blanks, face

cutters, solid side cutters, and other similar cutting tools for the milling machine while milling the teeth in them, a regular milling-machine arbor can often be used to advantage.

On many jobs, such an arbor cannot be used very readily on account of its being in the way of the milling cutter; in such a case, some other design of arbor must be adopted. In designing such a special arbor, the nature of the job will largely determine its shape, and will usually narrow the choice down to a very limited range of designs. Several special designs are here given as suggestions of what may be done.

14. Expanding Arbors.—Fig. 9 (*a*) is one design of a special arbor intended for holding work with a central hole

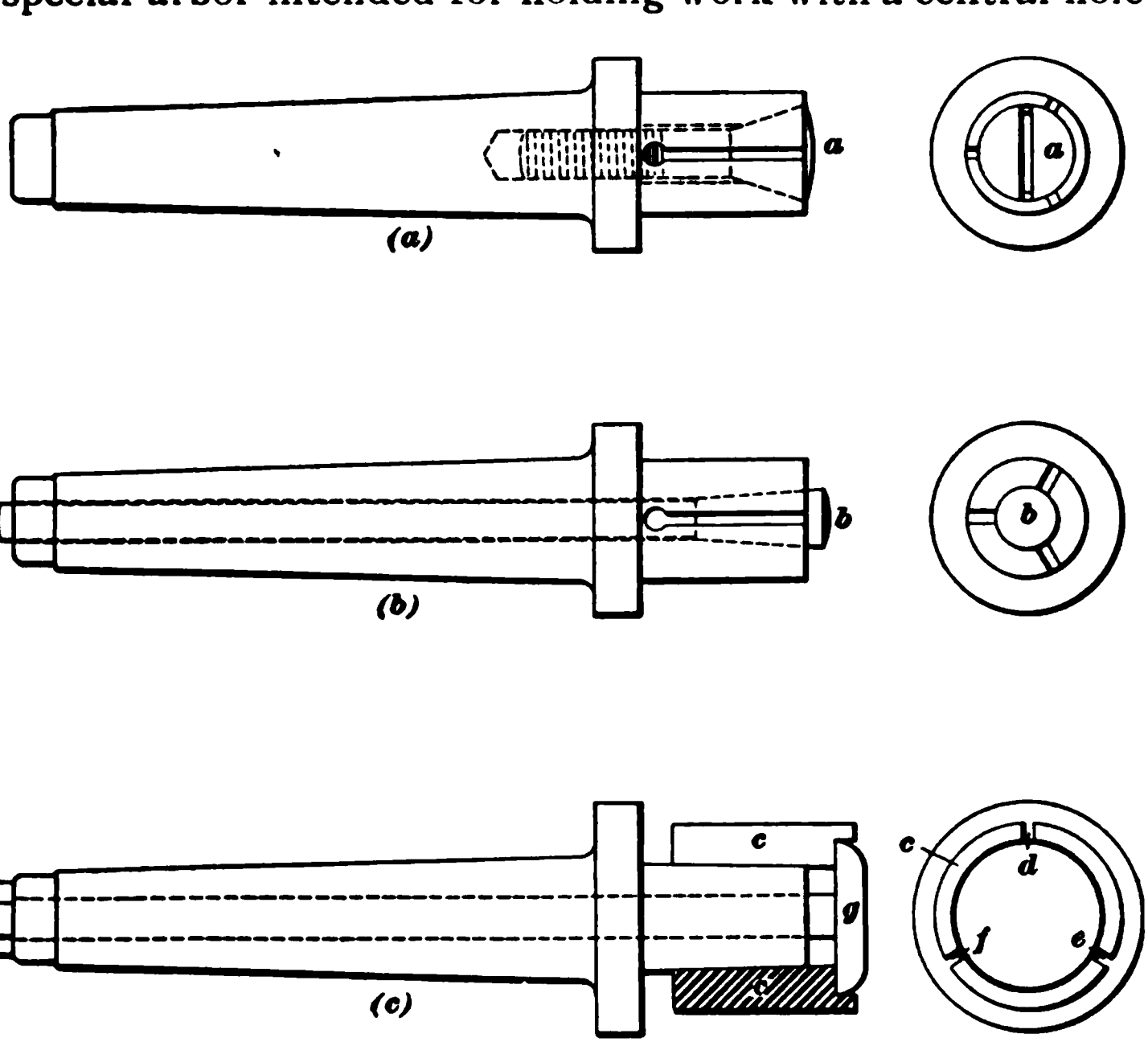

FIG. 9.

in such a manner as to allow it to be milled on the side; as, for instance, a small side milling cutter, or a bevel gear.

The front end of the arbor is split into three or more parts by slots terminating in holes close to the shoulder. A screw with a tapering head will expand the split end so as to hold the work, which is slipped on the arbor before the screw is tightened. The split end of the arbor must be a fair fit in the hole of the work before expanding. The arbor shown will hold the work central, and is cheap in first cost. Its disadvantages are that it can be used for only one size of hole, and that it will not hold the work as firmly as some other designs.

15. Fig. 9 (*b*) shows a design intended to overcome one of the disadvantages of the arbor just shown. The end is split into three or more parts and is made to fit the hole of the work; a central hole is drilled clear through the arbor and is reamed out tapering at the front end. A taper pin *b* is fitted to it, and is driven in to expand the arbor. To loosen the work, the pin is driven out. This may be done with a rod and hammer; the rod may be dispensed with if the taper pin is made with a long, straight shank extending beyond the end of the index-head spindle, as is shown in the illustration. If the split end before expanding is a fair fit in the hole of the work, it will hold the latter central and also very firmly, since a greater pressure, and hence more friction, can be created by driving the taper pin home than it is possible to obtain by tightening a conical-headed screw with a screwdriver. This design is perhaps slightly more expensive than the previous one, but it is to be preferred because it holds the work more firmly. It retains the disadvantage of being adapted for but one size of hole.

16. Bushed Expanding Arbor.—A design that can easily be adapted to various sizes of holes at a comparatively slight expense is shown in Fig. 9 (*c*). Here the front end of the arbor is tapered slightly, so that the included angle is, say, from 2° to 3°. A bushing *c* is bored to fit the tapered end of the arbor, and is turned outside to fit the hole of the work. It is split by an axial slot *d*; in order to allow it to expand easily, several slots, as *e* and *f*, may be cut around its

circumference. The bushing may be expanded by a bolt *g* extending clear through the arbor and having a nut at the rear end, or it may be locked by simply driving it home. In order to adapt the arbor to a different size of hole, a new bushing is the only thing required. The arbor shown must be removed from the index-head spindle to change the work, since the work can only be removed from the arbor by driving it off. A nut may be placed back of the bushing so that the work can be forced off without removing the arbor.

17. Chuck Arbor.—Fig. 10 is a design of arbor that would, perhaps, more properly be called a chuck, since it is used to hold work with a cylindrical part. The front end of the arbor is bored out to fit the work closely; its outside is turned tapering and threaded at the rear. It is split into three or more parts (four in this case) and has a sleeve nut *a* fitted to it. This sleeve nut has holes, as *b*, *b*, drilled

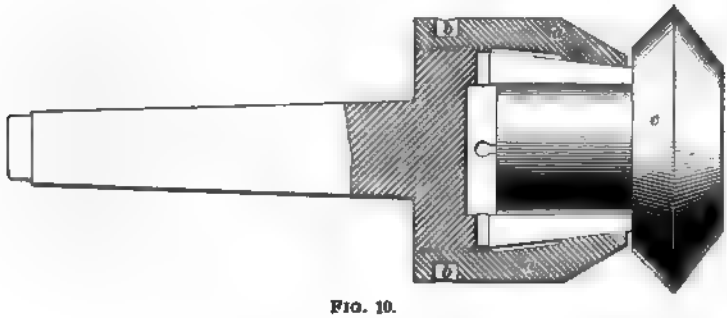

FIG. 10.

in it to take the pin of a spanner wrench. The work, as, for instance, the bevel-gear blank *c*, is placed in the arbor and the nut *a* is screwed home with a spanner wrench; this causes the split end to hold the work centrally and grip it quite firmly. In order to hold the work securely, it is necessary that the cylindrical part of the work is a fair fit in the hole of the arbor.

The arbor shown can be adapted to a limited range of sizes by fitting concentric split bushings to it; it cannot be expected in that case to grip the work as firmly as it does when no adapting bushing is used.

HOLDING WORK ON FACE PLATE.

18. Use of Face Plate.—For many jobs, it is possible to use a face plate for holding the work. When the index-head spindle is threaded, the face plate can be screwed to it; when this is not the case, it may be fitted to a shank fitting the hole of the index-head spindle. If this is done, it is not advisable to use a thread for uniting the shank and face plate on account of the danger of unscrewing the face plate, unless a round key is sunk half into the shank and half into the face plate. When a face plate is screwed to the index-head spindle, the same precaution must be taken as in case of a chuck fastened by screwing; that is, whenever circumstances permit, the cut should be taken in such a manner that there will be no tendency to unscrew the face plate.

19. Work is fastened to a face plate and is trued up in the same manner as in lathe work; it must always be remembered, however, that the pressure of the cut is much greater than in lathe work, and hence the clamping must be done very carefully. If circumstances permit, stop-pins may be inserted in the face plate to prevent slipping of the work, or stops may be bolted to it.

20. Lining the Face Plate.—Most of the face-plate work done in a milling machine requires the plane of the face plate to be at right angles to the axis of rotation of the milling-machine spindle. The setting may then be tested in the following manner: Place the index-head spindle about in line with the milling-machine spindle, as is shown in Fig. 11. No particular degree of accuracy is required for this; it will be good enough for the purpose if this is done as nearly as can be judged by the eye. Fasten a bent piece of wire, as *a*, to the milling-machine spindle in any convenient manner; by moving the table, bring the pointed end in contact with the face plate, or, if desired, with a feeling piece *b* placed against the face plate. Revolve the milling-machine spindle one-half of a revolution, thus bringing the point of the wire into the position shown in dotted

lines, and test the distance between the end of the wire and the face plate. If it is greater than in the first position, the index-head spindle requires shifting in the direction of the arrow x; if it is less, the shifting must be done in the direction of the arrow y. Test next in two positions at right

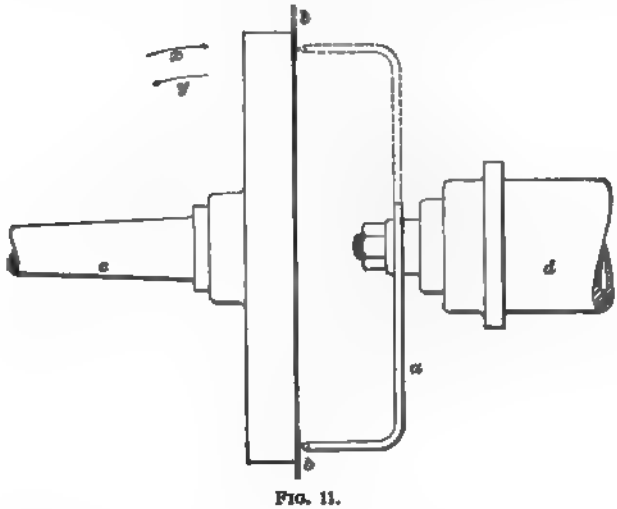

FIG. 11.

angles to those shown in the illustration, and shift the index-head spindle until the end of the wire remains at a constant distance from the face plate during a complete revolution of the milling-machine spindle. The wire used for testing should be quite stiff, say about $\frac{1}{4}$ inch in diameter.

21. Example of Face-Plate Work.—Fig. 12 is an example of circular milling that may be done with the work clamped to the face plate. Here the two slots a and b are circular; the slot a has its center of curvature at a' and the slot b at b', while the center of the work is at c. In order to mill the slots, the work must be set so that for the slot a, the point a' will coincide with the axis of rotation of the index-head spindle; for the slot b, the point b'

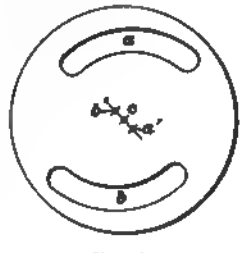

FIG. 12.

must coincide with the axis just mentioned. Fine center-punch marks may be made at these points; the work can then be trued up either with the face plate mounted on the milling-machine spindle or temporarily mounted in any suitable lathe that is available. The slots should be milled with an end mill; the feeding is then done by rotating the index-head spindle, and, hence, the face plate.

HOLDING WORK IN JIGS.

22. Purpose of Jigs.—When a great number of equal pieces are to be finished by milling, and especially when their form is such that they cannot be readily held in the vise or on the table in a simple and efficient manner, they can often be held to advantage in special holding devices called **milling jigs.**

A properly constructed milling jig should serve simultaneously for two different purposes in order to warrant the expense of constructing it. In the first place, it must hold the work securely without distorting it, leaving the surfaces to be machined exposed to the cutter; in the second place, the act of clamping must automatically aline the work properly for the subsequent cutting operation.

Milling jigs may be constructed in a great variety of ways to suit the nature of the work, and no specific rules can be given as to how they can best be constructed. A number of actual examples are here given; these examples will serve as suggestions of what may be done.

23. Splining Jig.—Fig. 13 shows a jig designed for holding shafts for key-seating or splining, plain cutters being used for the purpose; it is intended for milling two shafts simultaneously, as a general rule, but, as will become apparent when its construction is studied, it can be used for machining one shaft at a time. Referring to the illustration, a false table *a* is bolted to the milling-machine table. This false table has two parallel **V** grooves milled in it throughout its length; these grooves are parallel to the line

of motion of the milling-machine table. The shafts *b*, *b*, which are to be splined or key-seated, are laid into these grooves and are clamped by means of the clamps *c*, *c*, and *d*. It is thus seen that each shaft is held by two clamps at each clamping point. Owing to the way in which the clamps must be applied in order to be clear of the milling cutters *e*, *e*, one clamp would fail to insure a rigid holding of the

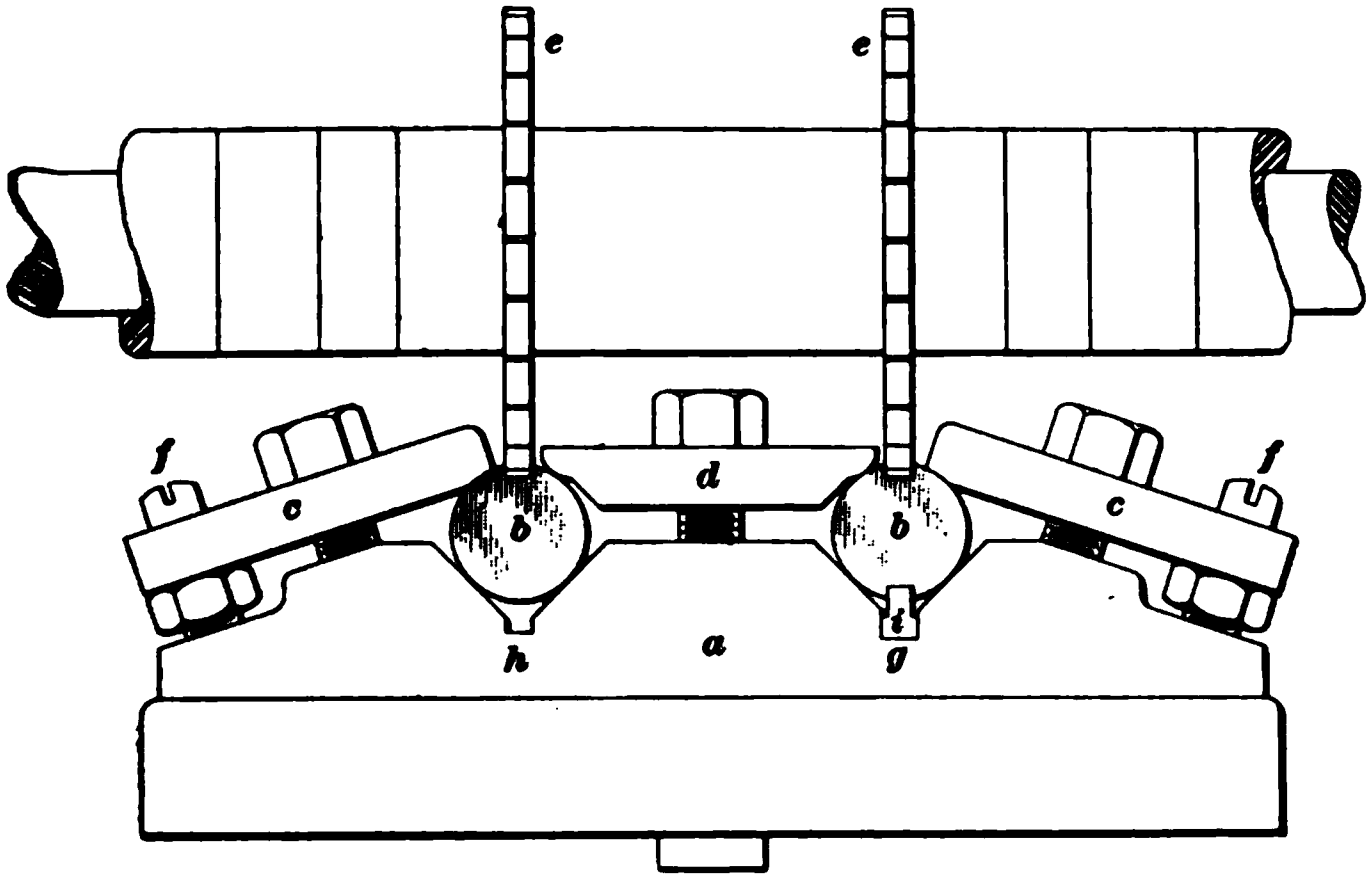

FIG. 18.

work, since it would not press the work with an equal pressure against both sides of the V groove. This inequality of pressure is corrected by applying a second clamp opposite the first. The jig is adapted for different sizes of shafts by making the blocking for the clamps *c*, *c* adjustable for height. The blocking consists of studs *f*, *f* with nuts screwed on them; the clamps *c*, *c* have clearance holes in them for the studs to pass through, and rest on the nuts, which are screwed up or down to suit different diameters of work.

24. The design shown is so constructed that shafts may be automatically lined up so as to have two keyways, or splines, cut diametrically opposite each other; the design can readily be modified to cut the keyways at any predetermined

must coincide with the axis just mentioned. . punch marks may be made at these points; t then be trued up either with the face plate mou milling-machine spindle or temporarily mou suitable lathe that is available. The slots sho with an end mill; the feeding is then done by index-head spindle, and, hence, the face plate.

HOLDING WORK IN JIGS.

22. Purpose of Jigs.—When a great nu pieces are to be finished by milling, and esp their form is such that they cannot be readily vise or on the table in a simple and efficient n can often be held to advantage in special hol called **milling jigs.**

A properly constructed milling jig should taneously for two different purposes in order to expense of constructing it. In the first place, i the work securely without distorting it, leaving to be machined exposed to the cutter; in the s the act of clamping must automatically alin properly for the subsequent cutting operation.

Milling jigs may be constructed in a great va to suit the nature of the work, and no specific given as to how they can best be constructed. of actual examples are here given; these e serve as suggestions of what may be done.

23. Splining Jig.—Fig. 13 shows a jig holding shafts for key-seating or splining, p being used for the purpose; it is intended for shafts simultaneously, as a general rule, but, as apparent when its construction is studied, it ca machining one shaft at a time. Referring to tion, a false table *a* is bolted to the milling-ma This false table has two parallel V grooves throughout its length; these grooves are paralle

·l for holding
ied with an
is bolted to

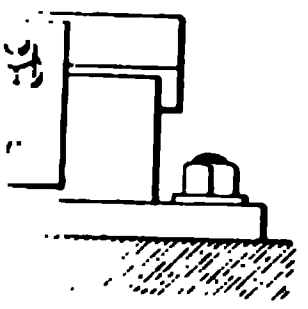

·d to hold
· used for

·ay occa-
ne simple

angle with each other. For the purpose of insuring a correct location of the second keyway, a rectangular groove, as *g* or *h*, is cut in the false table; a block *i*, with a tongue that fits the key seat, or spline, previously cut, is placed into the groove and the work is then placed on top with the key seat, or spline, engaging the tongue of the block.

25. Special Jig.—Fig. 14 (*a*) shows a machine part that is to have a dovetailed groove *a* cut into the bottom in line with the axis of the two holes bored through the standards *b*, *b*. Owing to the shape of the work, it is rather difficult to hold it properly for machining, and it will become a

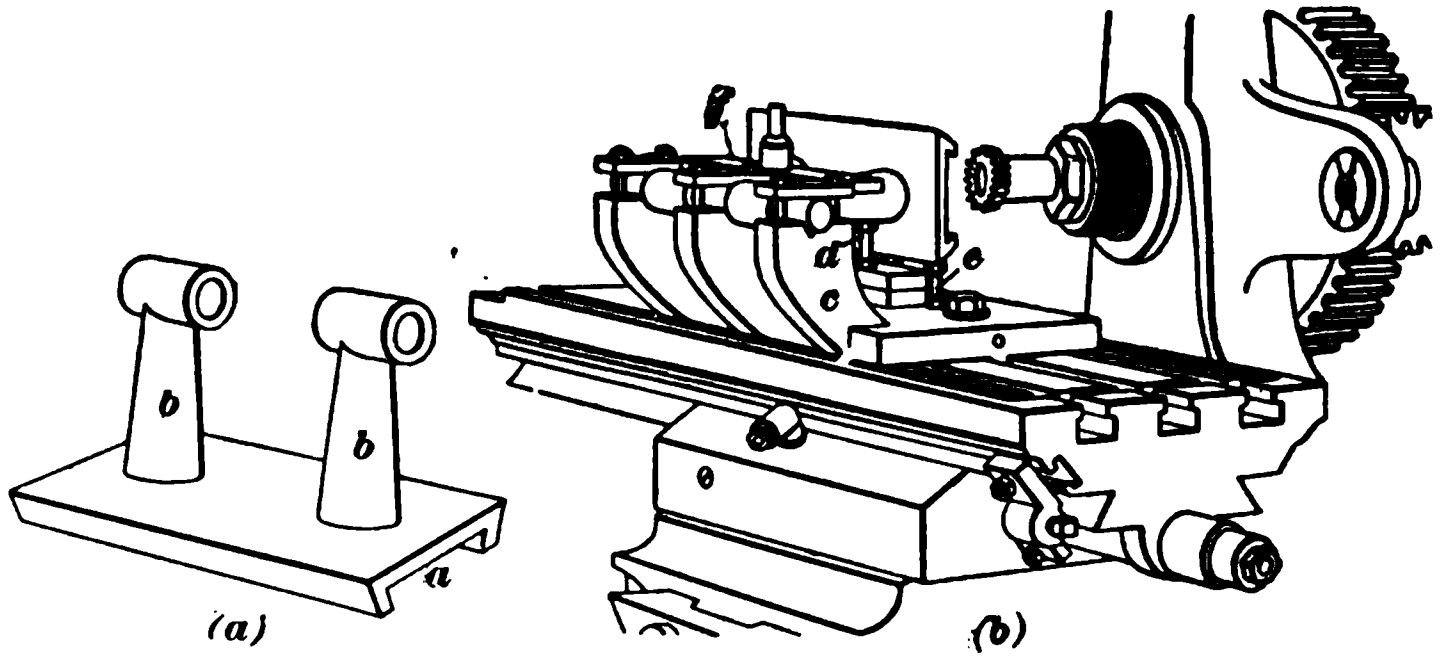

FIG. 14.

rather expensive job if a number of such castings are to be finished. The work may, however, be securely held, quickly set, and automatically lined up by the use of the jig shown in Fig. 14 (*b*).

This jig consists of a body *c* that is bolted to the milling-machine table. It has three brackets with **V** grooves milled in the top of them in line with the line of motion of the table. A cylindrical mandrel is passed through the holes in the standards of the work; this mandrel is then laid into the **V** grooves and clamped by means of the bolts and clamps shown. The free end of the work is lined up for height by means of the jack-screws *d* and *e*, and is finally confined by the clamp *f*.

26. Gib Jig.—Fig. 15 shows a jig designed for holding gibs to allow the angle on the edges to be finished with an end mill. The jig consists of a body *a*, which is bolted to

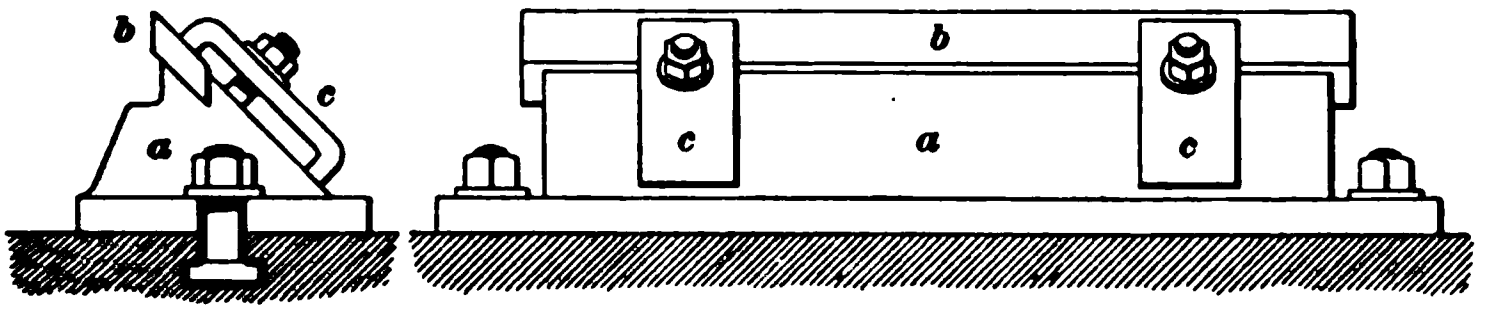

FIG. 15.

the table. The upper edge of the body is recessed to hold the gib *b* at the proper angle; two clamps *c*, *c* are used for holding the gib to the jig.

27. Multiple Jigs.—A number of pieces may occasionally be held at once in a jig in order to have some simple

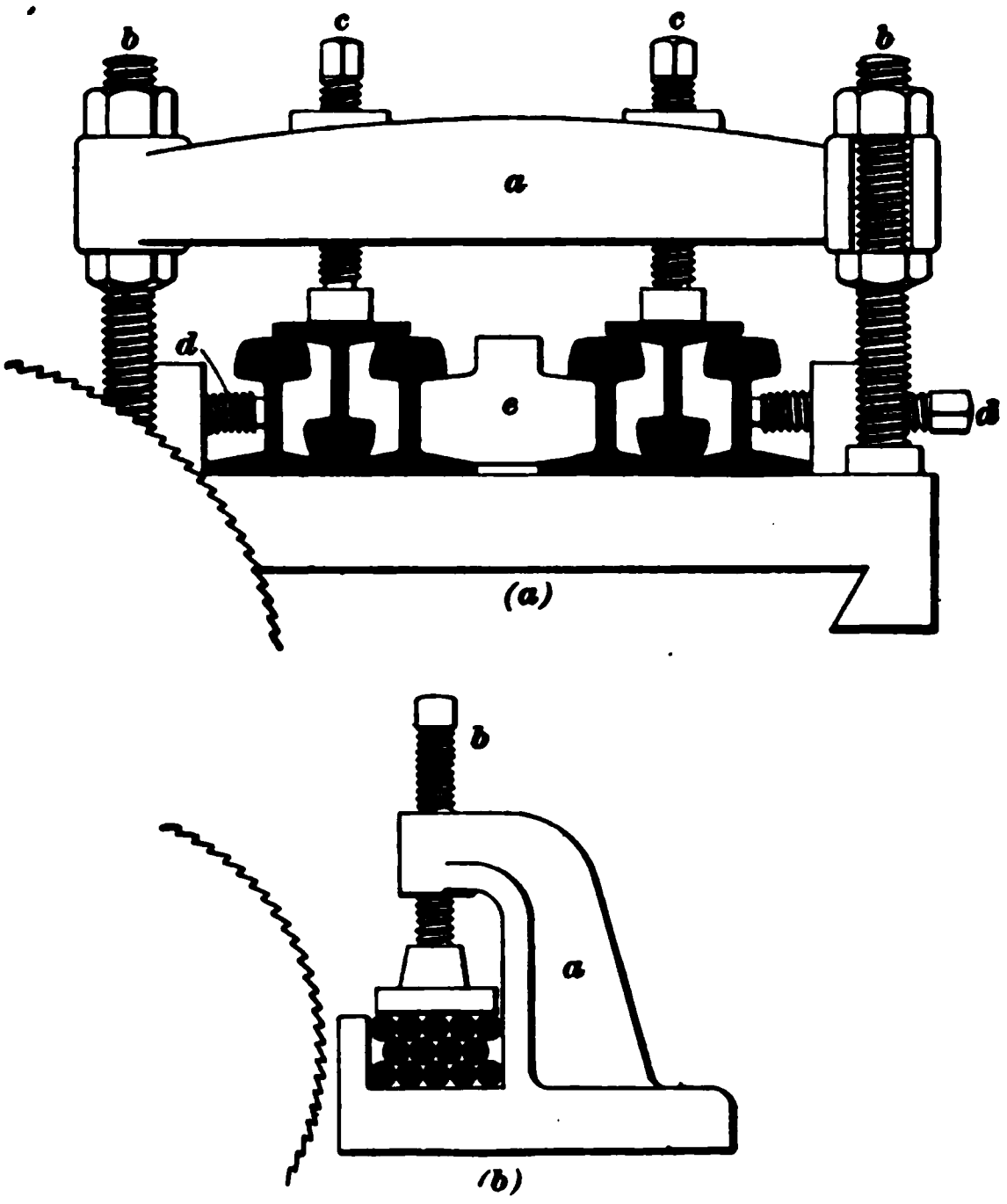

FIG. 16.

milling operation performed on them, as, for instance, the

squaring up of the ends of rails, as shown in Fig. 16 (*a*), or the squaring up of the ends of round work, as shown in Fig. 16 (*b*). In the first case, a yoke *a* is bolted to the table of the milling machine by means of the studs *b*, *b*. This yoke carries the setscrews *c*, *c*. The rails are confined sidewise by the setscrews *d*, *d*, which push each set of rails against the central packing-block *e*.

28. In Fig. 16 (*b*), a bracket *a* is bolted to the table of a milling machine; the bottom of the bracket has a rectangular opening in which the rods are placed and then confined by tightening the setscrew *b*. The act of tightening the setscrew causes the round rods to spread so that the outer ones come in contact with the sides of the opening; since each rod is in contact with at least two others, they will all be held firmly.

USE OF THE STEADY REST.

29. Purpose and Application.—As implied by the name, the **steady rest** used in milling-machine work is used for supporting slender work against the pressure of the cutting operation. Steady rests may be made in quite a

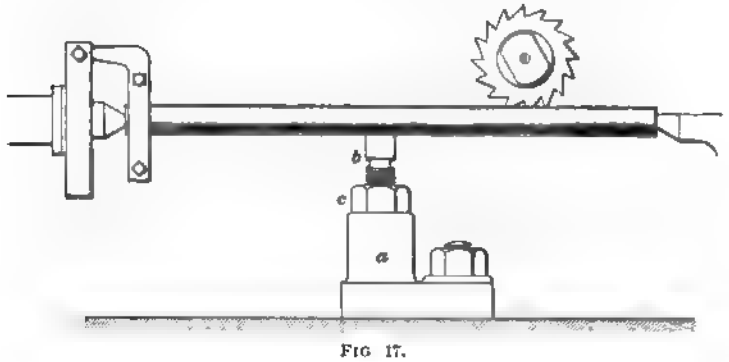

FIG 17.

number of ways to suit special jobs; Fig. 17 shows one form and incidentally gives its application to work held between the centers. The steady rest has a base *a*, which is bolted to the milling-machine table in a position about midway

between the ends of the work. A flat-ended setscrew *b*, having a check-nut *c*, is screwed into the top of the base, and is adjusted by turning until it is just in contact with the bottom of the work. The check-nut is then set up in order to lock the setscrew.

30. Supporting Work Sidewise.—A flat-ended setscrew will support the work in a vertical plane, but will not support it sidewise. For some classes of work, as, for instance, when fluting small taps held in a chuck, it is a decided advantage to support the work sidewise as well, since, in that case, the cut develops a sidewise bending action. For this purpose, the steady rest may be made with a setscrew having a V groove cut into its end, as shown in Fig. 18. Such a setscrew should not be screwed into the base, but should closely fit a cylindrical hole reamed in it; a nut *c*, applied as shown in Fig. 17, is then used for bringing the setscrew in contact with the work.

FIG. 18.

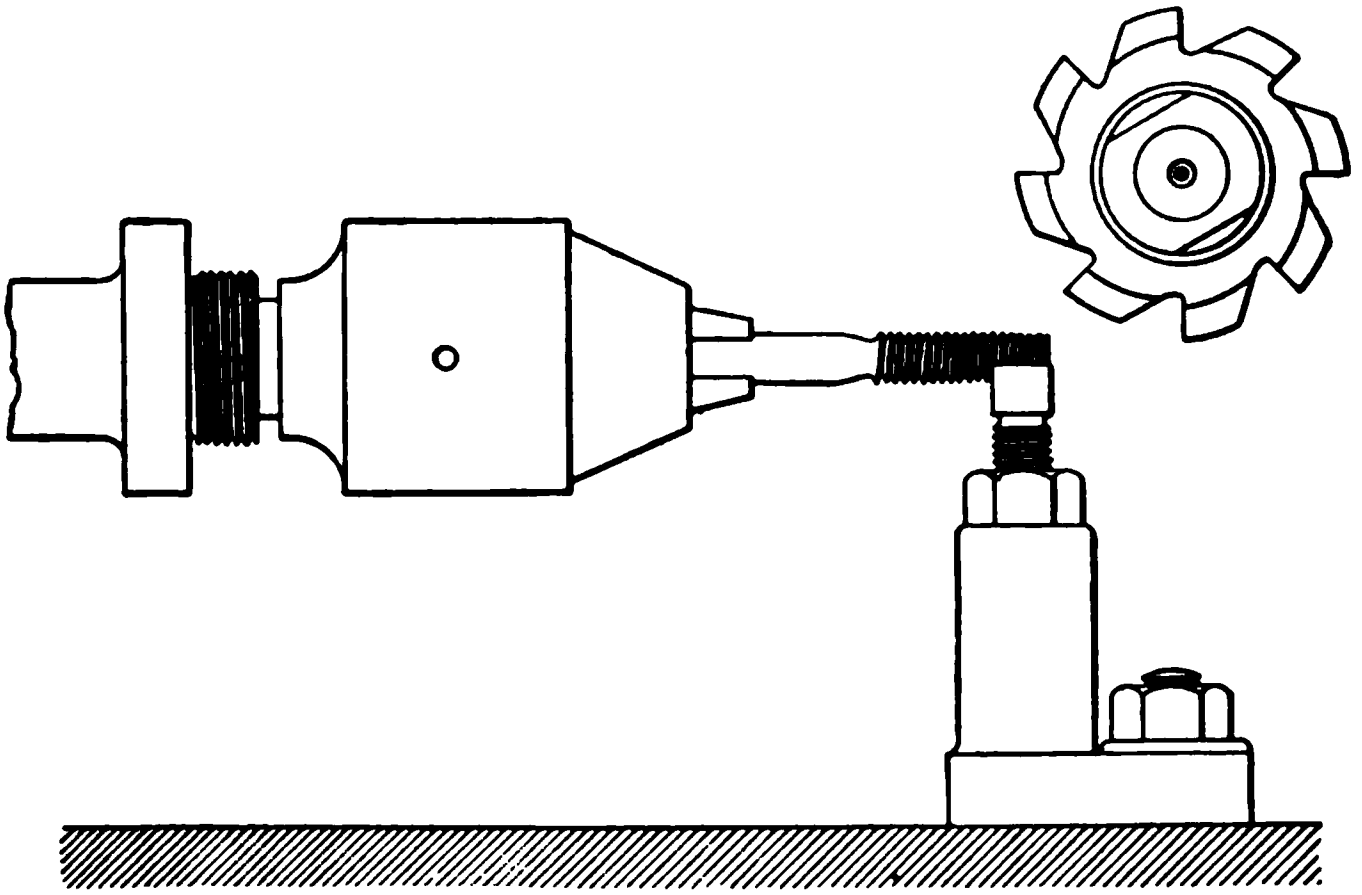

FIG. 19.

Fig. 19 shows an application of a steady rest with a V-ended setscrew to work held in a chuck; in this particular case, the work is a tap that is to be fluted. Since the work itself will hold the setscrew from turning, there is no

need of splining it and fitting a feather to the base, as is occasionally done.

31. Limitations of Ordinary Steady Rest.—The ordinary steady rest supplied by manufacturers, of which the one shown in Fig. 17 is an example, will answer very well for comparatively stiff work, but since it supports the work at one point only, as can be seen by referring to Fig. 17, it will, if the work is slender, still allow considerable bending of the unsupported parts during the cutting operation.

32. The ideal steady rest will always support the work directly beneath the cutter; this condition can be attained in two ways for cylindrical work; that is, either by a special steady rest made to suit the nature of the work, and constructed in such a manner as to support the work through its whole length, or by a *follow rest* attached to the frame of the machine and adjusted so as to be directly beneath the cutter.

A follow rest is open to practical objections, one of which is that it is applicable to none but cylindrical work, and to that only when the direction of the cut is parallel to the axis of the work. Another objection is the difficulty of attaching and designing it in such a manner as to have a fairly satisfactory range of application.

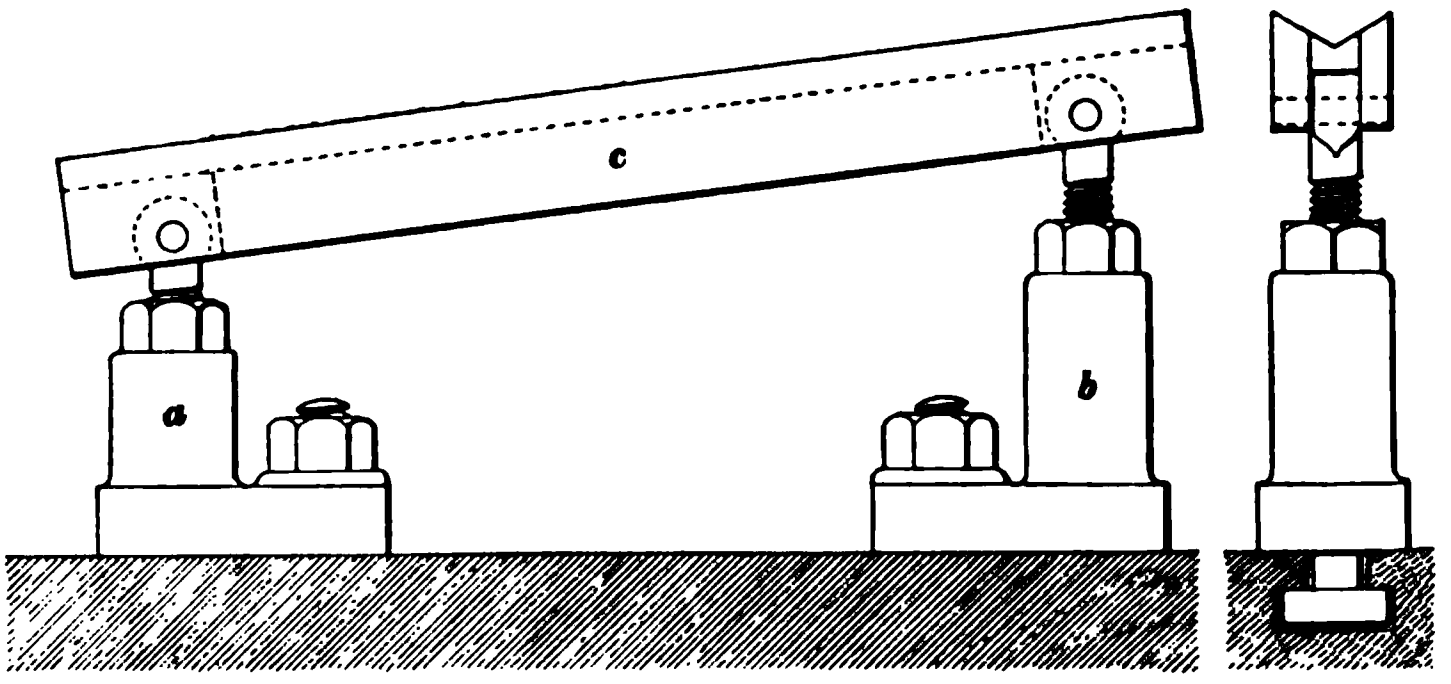

FIG. 20.

33. Universal Steady Rest.—Fig. 20 shows how a rather satisfactory universal steady rest applicable to straight

and taper work may be constructed for a horizontal milling machine. There are two bases *a* and *b*, which carry jack-screws and adjusting nuts. The ends of the jack-screws form eyes that are hinged to a supporting bar *c*, which may have a V groove milled in its upper side or be flat on top. As shown in the figure, it can readily be adjusted to suit taper work. Its range of usefulness can be extended by having several bars of different lengths.

INDEXING.

SIMPLE INDEXING.

34. Definitions. — There are many designs of index heads in the market and in use that differ only in detail and arrangement. All these designs make use of at least one of two methods of dividing the periphery of circular work into equal parts, and some designs make use of both methods. The process of dividing the circle by means of the index head is known in shop parlance as **indexing.** The two methods of indexing that are in use may be classified as *direct indexing* and *indirect indexing.*

Direct indexing is done by the aid of an index plate fastened direct to the index-head spindle; that is, the index plate is moved to obtain the divisions.

In **indirect indexing,** the index plate is normally stationary, and the index-head spindle is rotated by the use of suitable gearing. Indirect indexing is divided into two classes, which are known, respectively, as *simple* and *compound* indexing. In simple indexing, only one movement of the indexing mechanism is required; in compound indexing, two movements are made.

35. Construction of Indexing Mechanism.—Fig. 21 shows the indirect indexing arrangement reduced to the elementary form in which it appears in all index heads adapted to indirect indexing. The arrangements of the

details may vary in different designs, but the principle involved is common to all. The index-head spindle *a* has fastened to it a worm-wheel *b*; a worm *c*, which is keyed to the worm-shaft *d*, meshes with the worm-wheel. The worm-shaft carries at one end a radially adjustable crank *e*, which is fitted with a latch pin *f* having a cylindrical projection that fits the holes of the stationary index plate *g*. The index plate is usually kept from rotating by means of an axially movable pin, called the **stop-pin**, which is fitted

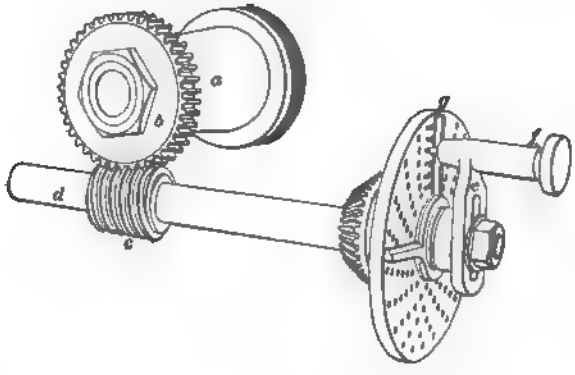

FIG. 21.

to the frame. This stop-pin can be withdrawn in order to allow the index plate to be rotated, should this become necessary. In most designs of index heads, the position of the stop-pin in respect to the axis of the worm-shaft is fixed; in other words, it can be made to engage with only one row or circle of holes in the index plate. There are some designs, however, where the stop-pin is fitted to the frame of the index head in such a manner that it can be shifted to engage any row of holes in the index plate.

36. Calculating Turns of Index Crank.—Referring now to the illustration, it will be apparent that the part of a revolution made by the index-head spindle for one complete turn of the worm-shaft depends on the number of teeth of the worm-wheel, and whether the worm has a single thread or a double thread. All modern index heads

regularly manufactured use a single-threaded worm, and, for these, one turn of the worm will produce that part of the revolution of the index-head spindle represented by the fraction $\frac{1}{\text{number of teeth in worm-wheel}}$. Now, suppose that the latch pin *f* engages the index circle having 20 holes, and that it is moved from one hole to the next adjoining one. Then, the worm is rotated $\frac{1}{20}$ of a revolution; assuming the worm-wheel to have 40 teeth, the index-head spindle is revolved $\frac{1}{40} \times \frac{1}{20} = \frac{1}{800}$ part of a revolution, and, hence, by making successive moves of 1 hole in the index circle having 20 holes, a circle is divided into $\frac{800}{1} = 800$ parts.

37. Now, suppose that, instead of moving the latch pin only 1 hole, it is moved 5 holes. Then, the worm-shaft makes $\frac{5}{20}$ of a revolution, the index-head spindle makes $\frac{1}{40} \times \frac{5}{20} = \frac{5}{800}$ of a turn, and, hence, a circle is divided into $\frac{800}{5} = 160$ parts. From the foregoing explanation of the principle involved, the following rule is deduced:

Rule.—*To obtain the number of turns the index crank must make, divide the number of turns required for one revolution of the index-head spindle by the number of divisions into which the periphery of the work is to be divided.*

EXAMPLE.—In a certain make of index head, the crank must make 40 revolutions to produce 1 revolution of the index spindle. How many turns must the crank make to divide the periphery of the given work into 6 parts?

SOLUTION.—Applying the rule just given, we get

$$40 \div 6 = 6\tfrac{4}{6} \text{ turns.} \quad \text{Ans.}$$

38. Selecting the Index Circle.—Taking the example of Art. **37**, it has been calculated that 6 whole turns and $\frac{2}{3}$ of a turn are required. The question now arises: How can we measure $\frac{2}{3}$ of a turn? For convenience of measuring fractional parts of a turn of different values, as $\frac{1}{2}$ of a turn, $\frac{5}{17}$ of a turn, $\frac{1}{19}$ of a turn, $\frac{2}{3}$ of a turn, etc., the index plate is provided with several concentric index circles, each circle having a different number of holes; several more

index plates are provided in order to extend the range of divisions obtainable.

39. With the latch pin adjusted to the circle having 20 holes, as in Fig. 21, to measure $\frac{2}{3}$ of a turn, the pin would evidently have to be moved $20 \times \frac{2}{3} = 13\frac{1}{3}$ holes. But it is much more convenient and also safer to move the latch pin an integral number of holes; this is done by selecting a suitable index circle. The index circle that is to be used is the one having a number of holes divisible, without a remainder, by the denominator of the fraction expressing the fractional part of a turn of the index crank. Referring again to Fig. 21, it is seen that the index circles have 20, 19, 18, 17, 16, and 15 holes. It will be noticed that there are two index circles divisible by the denominator 3 of the fractional part of turn, which are the 18-hole and 15-hole circles. This shows that either one of these two circles may be used.

Suppose we use the index circle having 15 holes. Then, to make $\frac{2}{3}$ of a turn, the latch pin must be moved $15 \times \frac{2}{3} = 10$ holes. If the circle having 18 holes is used, the latch pin must be moved $18 \times \frac{2}{3} = 12$ holes. From the foregoing statements, the following rule is obtained:

Rule.—*To measure fractional parts of a turn of the index crank, select an index circle having a number of holes that is divisible by the denominator of the fraction when reduced to its lowest terms. Multiply the number of holes in the index circle thus selected by the fraction to obtain the number of holes that the latch pin must be moved for the fractional part of a turn.*

EXAMPLE.—In a given index head, 40 turns of the index crank will produce one turn of the index-head spindle. How many turns must the index crank make, and what index circle would be used to divide the periphery of work into 28 divisions? The index plate available has the following number of holes in the various circles, 37, 39, 41, 43, and 49.

SOLUTION.—By the rule given in Art. **37**, to obtain 28 divisions, the index crank must make $\frac{40}{28} = 1\frac{12}{28}$ turns. Reducing the fraction giving the fractional part of a turn to its lowest terms, we get $\frac{3}{7}$. Now, according to the rule given in Art. **39**, we select the index circle

having 49 holes, it being the only one having a number of holes divisible by 7. The number of holes that the latch pin must be moved is $49 \times \frac{3}{7} = 21$.

Then, to obtain 28 divisions, make one complete turn and move the latch pin 21 holes additional in the circle having 49 holes. Ans.

40. Use of Sector.—The **sector** is a device used in connection with an index plate primarily for the purpose of saving the labor of counting the number of holes for each move of the latch pin, and incidentally for obviating mistakes in counting. Fig. 22 shows a sector in place on an

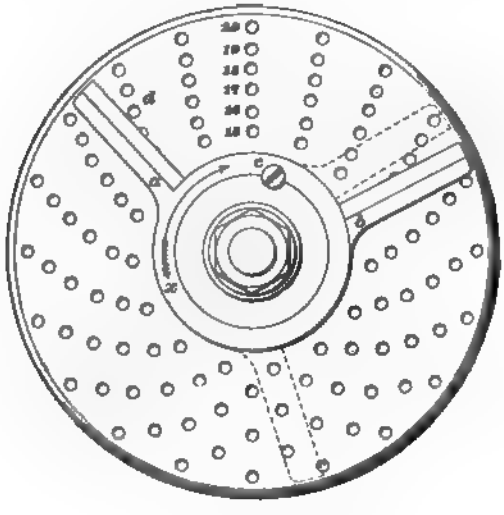

FIG. 22.

index plate. The sector consists of two radial arms *a* and *b*, which are so put together that the angle included between them can be changed; the two arms can be locked by tightening the screw *c*.

After the index crank has been adjusted so that the latch pin will drop fairly into the holes of the index circle that has been selected, say the circle having 18 holes in Fig. 22, drop the latch pin into one of the holes of that circle, as *d*, for instance. Bring the arm *a* against the left side of the latch pin and then move the arm *b* in the same direction in

which the latch pin is to turn, as in the direction of the arrow *x*, until the required number of holes in the circle used is between the latch pin and the arm *b*. Then lock the arms together. Thus, if it is required to move 5 holes in the index circle having 18 holes, place the arm *b* in the position it occupies in the illustration. In setting the arms of the sector, always observe the precaution of omitting to count the hole in which the latch pin is inserted; that is, count the hole next to this as the first hole. After the cut has been taken, withdraw the latch pin and make the required number of whole turns of the index crank, using the hole from which the latch pin was withdrawn as the starting point. Then move the index crank until the latch pin will drop into the hole indicated by the arm *b* of the sector, drop it in and immediately revolve the sector until the arm *a* is against the latch pin, or in the position shown in dotted lines.

41. Index Tables. — The manufacturers of milling machines, as a general rule, will furnish tables with their index heads that give all the divisions that can be obtained by simple indirect indexing. In these tables, under the heading "Number of Turns of Crank," the number of turns and, if necessary, fractional parts of a turn, are given. The fractional part of a turn is usually given as a fraction, the denominator of which gives the number of holes in the index circle that is to be used; the numerator denotes the number of holes of that circle that the latch pin is to be moved in addition to the whole turns. When no fractional part of a revolution is required, *any* index circle may be used. If no table is available, the crank movements must be calculated in the manner explained.

42. Effect of Changing Elevation of Head. — When the index head is elevated or depressed while work is attached to the spindle, it will be found that the spindle is rotated slightly by the act of changing the angle, since a change in the angle rotates the worm-wheel about the worm, which is the same as rotating the worm in the opposite

direction. For this reason, the work must be reset after each change of the angle of the index head. This is done by rotating it in the required direction by means of the index crank.

COMPOUND INDEXING.

43. Operation.—By the method of simple indexing, the range of divisions obtainable is limited to certain numbers depending directly on the number of index circles, and the number of holes in them, that are available. The range of divisions can, however, be greatly extended by a method known as **compound indexing.** The fundamental principle underlying compound indexing may be explained as follows: In Fig. 21, let the latch pin f be adjusted to the 20-hole index circle, and let the stop-pin be adjusted to the 19-hole index circle. Now, withdraw the latch pin and move the crank one hole, dropping the latch pin into the hole. Withdraw the stop-pin from the index plate and then rotate the index plate one hole, or $\frac{1}{19}$ of a turn, in the same direction in which the index crank was turned. Evidently, the worm c has been rotated $\frac{1}{20} + \frac{1}{19} = \frac{39}{380}$ of a turn, which is a part of a turn that ordinarily could not be measured without an index plate having a circle with 380 holes. Now, instead of moving the index plate in the same direction as the index crank, move it in the opposite direction. Then, the worm, as the result of the two movements, will have been rotated $\frac{1}{19} - \frac{1}{20} = \frac{1}{380}$ of a turn; a result that, as before, could not ordinarily be measured with the index plate shown. It is thus seen that compound indexing consists of two successive simple indexing operations; the result of the two operations is either the sum or the difference of the two simple indexings.

44. Calculating the Moves. -The moves required for compound indexing may be calculated by the following rule, which has been deduced algebraically:

Rule.—*Factor the number of divisions it is desired to obtain. Choose an index plate and two circles of holes*

thereon for trial; take the difference of the number of holes in the two circles and factor this difference. Draw a horizontal line under the factors. Next, factor the number of turns of the index crank required for one turn of the index-head spindle and write the factors below the horizontal line. Factor the number of holes in the two chosen circles, and write their factors also below the line. Next, cancel equal factors above and below the line. If **all** *factors above the line cancel, it is possible to obtain the proposed number of divisions by means of the two chosen circles. The number of holes to be gone forwards in one circle and backwards in the other circle are obtained by multiplying together the remaining factors below the line. Special attention is called to the fact that in case* **all** *the factors* **above** *the line do not cancel out, two other circles must be tried until the desired result is obtained or the possible combinations have been exhausted. In case the division is feasible, write a plus sign before one move and a minus sign before the other move to signify that they are opposite in direction.*

EXAMPLE.—It is desired to obtain 91 divisions with an index head in which 40 turns of the crank shall produce 1 revolution of the index-head spindle. What are the moves that are required in case it is found that 91 divisions can be obtained by compound indexing?

SOLUTION.—Choose two circles for trial, say those having 21 and 31 holes. By the rule just given, we have

$$\begin{aligned} & & 91 &= 7 \times 13 \\ 31 - 21 &= & 10 &= 2 \times 5 \\ & & \hline 40 &= 2 \times 2 \times 2 \times 5 \\ & & 31 &= 31 \times 1 \\ & & 21 &= 3 \times 7 \end{aligned}$$

It will be noticed that the factor 13 above the line does not cancel out; this shows that the proposed division cannot be obtained with circles having 31 and 21 holes. By trying different combinations, it will be found that circles having 39 and 49 holes will answer; thus:

$$\begin{aligned} & & 91 &= 7 \times 13 \\ 49 - 39 &= & 10 &= 2 \times 5 \\ & & \hline 40 &= 2 \times 2 \times 2 \times 5 \\ & & 49 &= 7 \times 7 \\ & & 39 &= 3 \times 13 \end{aligned}$$

It is seen that all the factors above the line cancel out. Multiplying the remaining factors below the line together, we get $2 \times 2 \times 7 \times 3 = 84$; that is, in order to obtain 91 divisions, we must go forwards 84 holes in the 49-hole circle, and backwards 84 holes in the 39-hole circle; or, go forwards 84 holes in the 39-hole circle and go backwards 84 holes in the 49-hole circle. Writing the moves as directed in the rule, they are

$$+\tfrac{84}{49} - \tfrac{84}{39}, \text{ or } +\tfrac{84}{39} - \tfrac{84}{49}. \quad \text{Ans.}$$

45. In case the number of holes in one or both of the chosen index circles are prime numbers, it is to be observed that the factors will be the number itself and 1. Thus, the factors of 17 are 17×1; the factors of 13 are 13×1, and so on.

46. Simplifying the Moves. — The counting of a large number of holes, especially for the motion of the index plate where no sector can readily be used, is a tedious job, and errors are very liable to occur in counting. In many cases, the results obtained by the rule in Art. **44** can be greatly simplified by a calculation that only involves a knowledge of algebraic addition.

The rules of algebraic addition are very simple and easily remembered. When the signs are alike, add as in ordinary addition and prefix the common sign. For instance, the sum of $+21$ and $+11$ is $+32$, and the sum of -12 and -7 is -19.

When the signs are unlike, in order to add, subtract the smaller value from the larger value, and prefix the sign of the larger value. Thus, the sum of $+18$ and -24 is -6; of $+18$ and -12 is $+6$; of -7 and $+3$ is -4, etc.

The algebraic addition of common fractions is performed, after reduction to a common denominator, by operating upon their numerators only; thus, to add $+\frac{2}{3}$ and $-\frac{1}{5}$, they must first be reduced to a common denominator. This is $3 \times 5 = 15$. Then $\frac{2}{3} = \frac{10}{15}$, and $\frac{1}{5} = \frac{3}{15}$. Adding $+\frac{10}{15}$ and $-\frac{3}{15}$, we get $+\frac{7}{15}$ as the sum.

47. Taking the example given in Art. **44**, the forward move is $+\frac{84}{49}$, that is, 84 holes in the circle having 49 holes, and the backward move is $-\frac{84}{39}$. Now, it can be shown

mathematically and by trial that the result will not be altered if we add algebraically any convenient number of whole turns or a part of a turn, or a whole turn and a part of a turn, with a minus sign prefixed, to the forward move, and add algebraically the same amount with a plus sign prefixed to the backward move. Thus, say, that we add one turn to each move. Then, one complete turn $= \frac{49}{49}$ and $\frac{39}{39}$. Performing the operation we get

$$\begin{array}{r} +\frac{84}{49} - \frac{84}{39} \\ -\frac{49}{49} + \frac{39}{39} \\ \hline +\frac{35}{49} - \frac{45}{39}, \end{array}$$

or 35 holes forwards in the index circle having 49 holes and 45 holes backwards in the circle having 39 holes. It may be possible to reduce these moves to a still simpler form. To discover if this is possible, add algebraically one or more turns or parts of a turn, or whole turns and part of a turn, to each move, prefixing the plus and minus sign as previously directed.

Suppose one turn is added. We then get

$$\begin{array}{r} +\frac{35}{49} - \frac{45}{39} \\ -\frac{49}{49} + \frac{39}{39} \\ \hline -\frac{14}{49} - \frac{6}{39}. \end{array}$$

That is, the one move is 14 holes in the index circle having 49 holes, and the other move is 6 holes in the 39-hole circle. It will be observed that the addition of one turn gave like signs to the two moves; this means that both moves must be made in the *same direction*.

48. In order to obtain 154 divisions by compound indexing, the 33-hole and 21-hole index circles can be used, and the moves are found thus:

$$\begin{array}{rl} & 154 = 2 \times 7 \times 11 \\ 33 - 21 = 12 = & 2 \times 2 \times 3 \\ \hline & 40 = 2 \times 2 \times 2 \times 5 \\ & 33 = 3 \times 11 \\ & 21 = 3 \times 7. \end{array}$$

Multiplying the remaining factors together, we get $3 \times 5 = 15$, or moves of $+\frac{15}{33} - \frac{15}{21}$, or $+\frac{15}{21} - \frac{15}{33}$.

Simplifying by adding, say, 1 turn to the moves first named, we get

$$\begin{array}{r} +\frac{15}{33} - \frac{15}{21} \\ -\frac{33}{33} + \frac{21}{21} \\ \hline -\frac{18}{33} + \frac{6}{21}. \end{array}$$

In this particular case, an excellent example presents itself of still further simplifying the moves by the algebraic addition of a fractional part of a turn. Let $\frac{2}{3}$ of a turn be added. Now, $\frac{2}{3}$ of a turn, with an index circle having 21 holes, means $\frac{14}{21}$ of a turn of the index crank. Likewise, $\frac{2}{3}$ of a turn with an index circle having 33 holes, means $\frac{22}{33}$ of a turn of the index crank. Then, adding these values with the proper signs prefixed, we get

$$\begin{array}{r} +\frac{6}{21} - \frac{18}{33} \\ -\frac{14}{21} + \frac{22}{33} \\ \hline -\frac{8}{21} + \frac{4}{33}. \end{array}$$

As it does not make the least difference in the result as to the direction in which the moves are made, as long as they are made in opposite directions (the fact of the signs being unlike indicates that they must be opposite in direction), the moves may be $+\frac{8}{21}$ and $-\frac{4}{33}$ without affecting the result.

The moves may, in this particular case, be still further simplified by the algebraic addition of $\frac{1}{3}$ of a turn. $\frac{1}{3}$ of a turn $= \frac{7}{21}$, and $\frac{11}{33}$. Then,

$$\begin{array}{r} +\frac{8}{21} - \frac{4}{33} \\ -\frac{7}{21} + \frac{11}{33} \\ \hline +\frac{1}{21} + \frac{7}{33}. \end{array}$$

Since the moves have like signs, both moves are to be made in the same direction.

49. There is no general rule that can be given for determining how much to add algebraically to each move in order to reduce it to a simpler form. This is purely a matter of judgment and experiment. It is to be observed,

however, that when a partial turn is added, the denominator of the fraction expressing the partial turn must be a common factor of the denominators of the two fractions expressing the two moves. Thus, $\frac{5}{7}$ of a turn should not be added to $+\frac{6}{21}$ and $-\frac{13}{33}$, since 7 is not a factor common to both 21 and 33.

50. In relation to compound indexing, it may be remarked that it should not be used when the required divisions can be obtained by direct indexing. The reason for this may be found in the fact that the chances of making an error are much greater with the compound indexing, since, for at least one of the movements, the holes must actually be counted.

SPIRAL WORK.

GENERATION OF SPIRALS.

51. Combination of Movements. — If work held between centers, or in the chuck of a universal index head, is given a rotary motion and a motion of translation at the same time, while the relation between the two motions remains constant, a stationary point, in contact with the surface of the work, will trace a conical spiral or a helix, depending on whether the work is conical or cylindrical. In a milling machine, the motion of translation is the motion of the milling-machine table, which is caused by rotating the feed-screw either by the automatic feed or by hand. Now, if the feed-screw is connected by gear-wheels with the index-head spindle, it is evident that this spindle, and, hence, the attached work, will be rotated by any rotation of the feed-screw; since a rotation of the feed-screw causes a motion of translation of the milling-machine table, while the gearing insures a constant relation between the two motions, it follows that a milling cutter operating on the work will take a cut that follows a helical or conical spiral path.

52. Definitions.—In a spiral or helix, the distance advanced in one revolution, measured in the direction of the axis, is called the **pitch** of the spiral or helix, or, also, the **lead.** In milling-machine work, the lead is always expressed in inches, or in inches and fractional parts of an inch. In the best modern practice, the term *lead* is used in preference to *pitch*, and will, hence, be used here. It has become customary to limit the term pitch to small screws; while, in its strict sense, it means the distance that the screw will advance in one revolution, it has become the practice in some shops to apply it to the number of threads per inch of the screw. In order to prevent any confusion, the term *lead* will here be used exclusively, and will, when applied to a helix, spiral, or screw thread, always represent the distance advanced in one revolution.

53. Angle of Helix.—A helix is represented by the hypotenuse of a right-angled triangle having adjacent sides equal to the lead of the helix and to the circumference of a cylinder around which it is wound in such a position that the adjacent side representing the lead is in the same plane

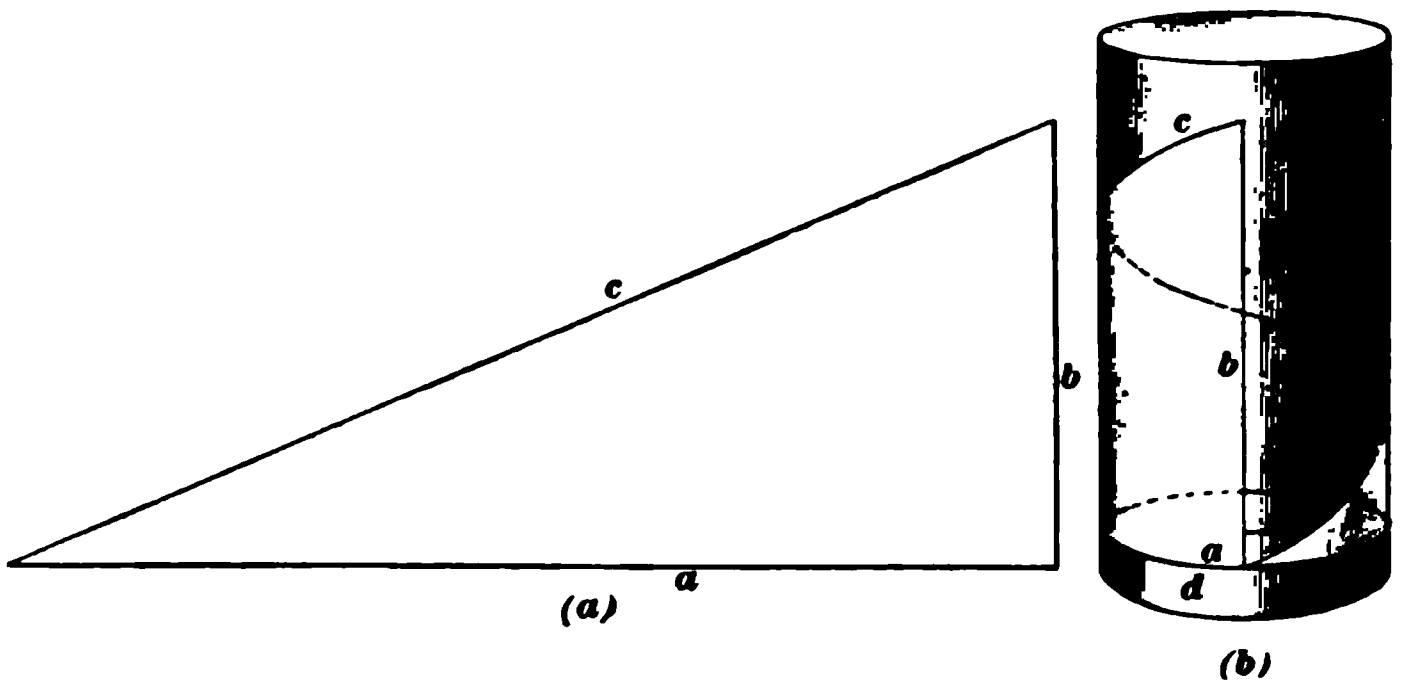

FIG. 23.

as the axis. Thus, let Fig. 23 (*a*) represent a right-angled triangle cut out of paper, where the adjacent side *a* (one of the sides adjoining the right angle) is equal to the circumference of the cylinder *d* in Fig. 23 (*b*), and the adjacent side *b* is the lead. Then, when this triangle is wound

around d, as shown in Fig. 23 (b), the side c will form a helix having a diameter equal to d, and a lead b. The angle included between the sides b and c is called the **angle of the helix.**

54. From trigonometry, it follows that the tangent of the angle of the helix is equal to the circumference of the cylinder (the length of the side a of the triangle) divided by the lead. Hence the following rule:

Rule.—*Divide 3.1416 times the diameter of the helix by the lead. Take the corresponding angle from a table of natural tangents.*

EXAMPLE.—A helix 4½ inches diameter has a lead of 16 inches; what is the angle of the helix?

SOLUTION.—Applying the rule just given, we get

$$\frac{4\frac{1}{2} \times 3.1416}{16} = .88358.$$

From a table of natural tangents, the corresponding angle is found to be 41° 28′, nearly. Ans.

55. It often occurs that it is required to find what lead of helix will give a certain angle of helix, the diameter of the helix being known. This may be calculated by the following rule:

Rule.—*Divide 3.1416 times the diameter of the helix by the tangent of the given angle.*

EXAMPLE.—A helix is to have an angle of helix of 30° 45′ for a diameter of 3¼ inches. What is the lead of the helix?

SOLUTION.—From a table of natural tangents, the tangent corresponding to 30° 45′ is .59494. Applying the rule just given, we get

$$\frac{3.1416 \times 3\frac{1}{4}}{.59494} = 17.162 \text{ in.} \quad \text{Ans.}$$

56. The two rules just given apply to helixes only, and should not be applied to conical spirals. In a conical spiral, the angle of the spiral changes continually throughout its length; it is smallest at the small end of the spiral and largest at the large end.

The rate at which the angle changes in a conical spiral depends on the angle included between the sides of the cone; when this angle is very small, i. e., when the cone is almost a cylinder, the change in the angle of the spiral is extremely small, but it rapidly becomes larger as the angle included between the sides of the cone becomes greater.

57. Connecting Index-Head Spindle and Feed-Screw. — There are many ways in which the feed-screw and index-head spindle may be connected together by gearing; since, in nearly all designs of universal index heads, the worm-shaft and the feed-screw are at right angles to each other, it is necessary in these designs to introduce a pair of miter gears, or bevel gears, or a pair of equivalent machine elements into the gear train in order to allow the worm-shaft and feed-screw to be connected together by spur gearing.

58. Fig. 24 shows one of the simplest designs for connecting the feed-screw and index-head spindle together. The worm-shaft *a* carries a miter gear *b*, which, normally, is free on the worm-shaft. The index plate *c* is fastened to the hub of the miter gear *b*, and is ordinarily prevented from rotating by a stop-pin in the frame of the index head. The index crank *d* is attached to the worm-shaft. Now, if the stop-pin is withdrawn, and the latch pin is dropped into a hole of the index plate, the worm-shaft and the miter gear *b* are locked together, so that any motion transmitted to the miter gear will also be transmitted to the worm-shaft and then, through the intervention of the worm-wheel *e*, to the index-head spindle *f*. The miter wheel *b* meshes with a miter gear *g*, which is keyed to the shaft *h*; the first change gear *k* of the train of spur gearing connecting the spindle and feed-screw is attached to the other end of the shaft *h*. The first gear is usually called the **worm-gear,** from the fact that it operates the worm.

59. A spur gear *l* known as the **feed-screw gear** is placed on the feed-screw; the gears *k* and *l* are then

connected together by the two gears *m* and *n* placed on the same sleeve, which is mounted on an adjustable stud fastened in any suitable manner to the frame of the index head or the table of the machine. As a general rule, another stud is

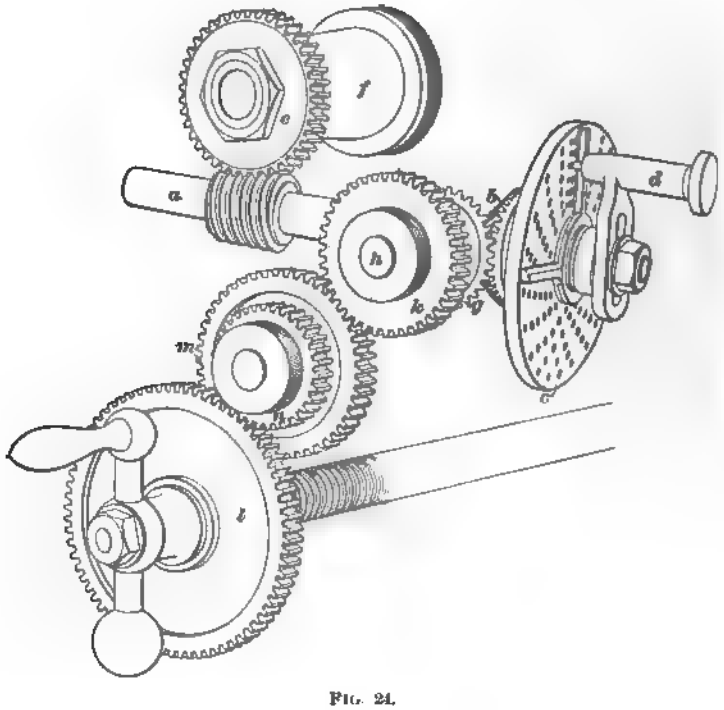

FIG. 24.

provided on which an idler can be placed. This idler may be placed either between *k* and *m*, or *l* and *n*; it will not change the velocity ratio of the gear train, but only the direction of the rotation of the index-head spindle, and, hence, the direction of advance of the spiral. In most milling machines, the introduction of the idler will cause the production of a left-handed spiral; owing to the difference in construction of the various machines, it is better, however, to determine this separately for each machine than to

rely on the presence of an idler as a guarantee of a left-handed spiral.

60. Since the index-head spindle and the feed-screw are positively connected together, the relation between the rotation of the spindle and the advance of the table remains constant, and the resulting helix or spiral will have a uniform lead. Evidently, the lead can only be changed by changing the velocity ratio of the gears connecting the feed-screw and spindle; since all modern designs of milling machines have the gearing that connects the worm-shaft to the worm-gear *k* arranged in such a manner that it cannot be changed, it follows that different helixes or spirals can only be obtained by changing the gears *k*, *l*, *m*, and *n*. It is customary to call the gear *m* the **first gear on stud,** and the gear *n* the **second gear on stud.**

It will be observed that the change gears form a train of **compound gearing.** The reason for the almost universal adoption of compound gearing is to be found in the fact that, with a given number of change gears, a much larger range of combinations is possible than can be obtained with a single gear train.

61. As previously stated, the index plate is locked to the worm-shaft and rotates with it during the cutting operation. Indexing is done after the completion of the cut and while the machine is standing still, first locking the index plate by inserting the stop-pin, and then turning the index crank the required number of turns. The index plate is now unlocked by pulling out the stop-pin, and the machine is ready for the next turn.

62. Fig. 25 shows a more complicated design of a gear train for connecting the index-head spindle and feed-screw. This design was adopted by the maker of the particular style in which it is found because it allowed a very rigid and compact construction of the index head.

The worm-shaft *a* here carries a spur gear *b*, which can be, and is, locked to the worm-shaft by dropping the latch pin

into one of the holes of the index plate *c*. The spur gear *b* meshes with an idler *d* carried on a stud; this idler in turn drives a spur gear *e*, which is keyed to one end of the shaft *f*. A spiral gear *g* is keyed to the other end of the shaft *f* and meshes with another similar spiral gear *h* keyed to a shaft *i*, which is at right angles to the worm-shaft, and, hence, parallel to the feed-screw. The shaft *i* carries the gear on the worm-stud *k*, which meshes with

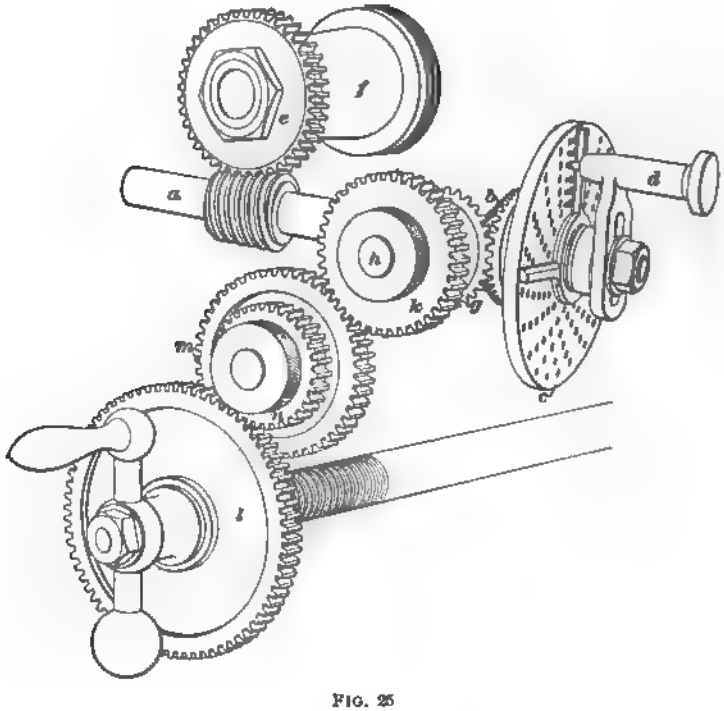

FIG. 25

the first gear *m* on the stud. The second gear *n* on the stud rotates with *m* and meshes with the feed-screw gear *l*. In this gear train, the gears *b*, *d*, *e*, *g*, and *h* cannot be changed; different spirals and helixes are produced by changing the change gears *k*, *l*, *m*, and *n*, as in the previous case.

CALCULATING THE CHANGE GEARS.

63. Lead of the Machine.—Assume that the machine is so constructed that one revolution of the worm-shaft will produce exactly one revolution of the gear on the worm-stud *k*, Figs. 24 and 25, and let the change gears be such that one revolution of the feed-screw will produce exactly one revolution of the gear on the worm-stud, and, hence, of the worm-shaft *a*. Then, during one revolution of the feed-screw, the milling-machine table will advance a distance equal to the lead of the feed-screw, and, at the same time, the index-head spindle will be rotated a part of a turn given by the fraction $\frac{1}{\text{number of teeth in worm-wheel}}$. To make one complete revolution of the index-head spindle, the feed-screw must make a number of turns equal to the number of teeth in the worm-wheel. The distance that the table will advance, which is the lead of the helix produced under the assumed conditions, is given by the product obtained by multiplying the lead of the feed-screw by the number of teeth in the worm-wheel. This particular distance is called the **lead of the machine.**

64. Now, suppose that the worm-shaft *a*, Figs. 24 and 25, is so connected to the gear on the worm-stud *k* that one revolution of the worm-shaft does *not* produce one revolution of the gear on the worm-stud. Then, the distance that the table advances during one revolution of the index-head spindle is no longer given by multiplying the number of teeth of the worm-wheel by the lead of the feed-screw. The rule for this case becomes as follows:

Rule.—*To find the lead of the machine, multiply the number of revolutions of the gear on the worm-stud that are required to produce one revolution of the index-head spindle by the lead of the feed-screw.*

EXAMPLE.—It having been found by actual count that 56 revolutions of the gear on the worm-stud are required to produce 1 revolution of the index-head spindle, and the feed-screw having a lead of $\frac{1}{4}$ inch, what is the lead of the machine?

SOLUTION.—Applying the rule just given, we get

$$56 \times \tfrac{1}{4} = 14 \text{ in.} \quad \text{Ans.}$$

65. The rule just given is general, since it takes in any case that is likely to arise, while that given in Art. **63** is limited to the special case where the revolutions of the gear on worm-stud and worm-shaft are equal. For this reason, the lead of the machine should preferably be calculated by the general rule given, which, incidentally, also takes account of the fact that the worm which meshes with the worm-wheel on the index-head spindle may be double-threaded.

66. Single Gearing.—The lead of the spiral or helix having been given, the ratio between the revolutions of the gear on worm-stud and the revolutions of the feed-screw is

$$\frac{\text{lead of the spiral}}{\text{lead of the machine}}.$$

Then, for simple gearing it only remains to choose gears that have this ratio. This is most conveniently done by raising both terms of the ratio to higher terms that correspond with the teeth of the gears available.

EXAMPLE.—The lead of the required helix being 14 inches and the lead of the machine 10 inches, what gears may be used in simple gearing?

SOLUTION.—By the statement of Art. **66,** the ratio is $\frac{14}{10}$. Since gears of 14 and 10 teeth are not usually available, multiply both terms, say, by 2. This gives $\frac{28}{20}$, or gears having 28 and 20 teeth. Multiplying by 3, we get $\frac{42}{30}$, or gears having 42 and 30 teeth. By still further raising the terms of the ratio to higher terms, other gears can be found that will give the required spiral. Ans.

67. The question of where each gear of the set is to be placed depends on the relation of the lead of the spiral to the lead of the machine. When the lead of the spiral is less than the lead of the machine, the gear on worm-stud must be the smaller gear of the two; when the lead of the spiral is greater than the lead of the machine, the gear on the worm-stud must be the larger of the two.

68. When the two change gears of the train of simple gearing are given, to find the spiral or helix that will be cut, the following rule may be used:

Rule.—*Multiply the number of teeth of the gear on worm-stud by the lead of the machine, and divide the product by the number of teeth of the feed-screw gear.*

EXAMPLE.—The gear on worm-stud having 48 teeth and the feed-screw gear 100 teeth, what helix will be cut if the lead of the machine is 12 inches?

SOLUTION.—Applying the rule just given, we get

$$\frac{48 \times 12}{100} = 5.76 \text{ in.} \quad \text{Ans.}$$

69. Compound Gearing.—When the machine is compound-geared, the ratio $\frac{\text{lead of the spiral}}{\text{lead of the machine}}$ is the *compound ratio* of the gearing. This ratio must be resolved into factors that are raised to higher terms until they correspond with the number of teeth of gears that are available. For instance, let it be required to cut a spiral with a lead of 24 inches, the lead of the machine being 10 inches. Then, the compound ratio is $\frac{24}{10}$, which resolves into the factors $\frac{3}{2} \times \frac{8}{5}$. This means that two of the gears that mesh together must be in the proportion of 3 to 2, and the other two gears in the proportion of 8 to 5. Raising $\frac{3}{2}$ to a higher term by multiplying the numerator and denominator by any integral number, say 16, we get 48 and 32 teeth as the number of teeth of one pair of gears. Raising $\frac{8}{5}$ to higher terms by multiplying the numerator and denominator by any integral number, say 12, we get 96 and 60 for the other pair of gears. It is to be observed that there is not the slightest necessity of multiplying the terms of both factors by the same integral number; all that is required is that the two terms of each factor be multiplied by the same number. After factoring the ratio, the numerators of the factors will represent the driven wheels of the gear train, and the denominators will represent the drivers.

70. The question of where each pair of meshing gears must be placed can easily be answered when it is considered that if the lead of the helix to be cut is smaller than the lead of the machine, the gear on worm-stud must run faster than the feed-screw gear. When the lead of the helix is greater than the lead of the machine, the gear on worm-stud must run slower than the feed-screw gear.

71. When the lead of the spiral or helix is a whole number of inches, it is usually quite easy to factor the compound ratio. This factoring can sometimes be made easier by raising the ratio to a higher term by multiplying the numerator and denominator by some number. For instance, the ratio $\frac{17}{10}$ is rather difficult to factor as it stands, but by raising it to a higher term, say by multiplying by 4, we get $\frac{68}{40}$, which readily resolves into the factors $\frac{17}{20} \times \frac{4}{2}$, or $\frac{17}{2} \times \frac{4}{20}$, or $\frac{34}{8} \times \frac{2}{5}$, or $\frac{34}{5} \times \frac{2}{8}$.

72. Take, now, the case of a spiral having a lead expressed in whole inches and part of an inch, as, for instance, $14\frac{1}{4}$ inches. Let the lead of the machine be 12 inches. Then, the compound ratio is $\frac{14\frac{1}{4}}{12}$, which is a form in which it is rather difficult to factor. Now, suppose it is raised to a higher term, multiplying by a number that will make the numerator $14\frac{1}{4}$ a whole number. In this case, it is obvious that 4, or a multiple of 4, will be the number to use. Raising $\frac{14\frac{1}{4}}{12}$ to a higher term by multiplying the numerator and denominator by 4, we get $\frac{57}{48}$ as the compound ratio. This readily resolves into quite a number of factors, thus: $\frac{3}{4} \times \frac{19}{12}$, or $\frac{3}{12} \times \frac{19}{4}$, or $\frac{19}{6} \times \frac{3}{8}$, or $\frac{19}{8} \times \frac{3}{6}$, or $\frac{3}{16} \times \frac{19}{3}$, or $\frac{19}{16} \times \frac{3}{3}$, etc.

73. When it is not feasible to factor the compound ratio, or to get gear combinations that include available gears, the proper gear combination can often only be discovered by a method that may be aptly described as "cutting and trying." In many cases it is not possible to cut

the required spiral at all, but the machine may often be geared to cut a spiral that approaches the desired spiral somewhat closely. Here the cut-and-try method must also be followed.

There are two methods of procedure that may be adopted; either three gears of the set are assumed and the fourth is calculated, or a combination of four gears is selected and the resulting spiral or helix found by calculation.

74. When three gears of the set are assumed, the fourth may be calculated as follows:

Rule.—*Multiply the lead of the spiral or helix in inches by the number of teeth of the feed-screw gear and the first gear on stud. Divide the product by the product of the number of teeth of the second gear on stud and the lead of the machine in inches. The quotient will be the number of teeth of the worm-gear.*

EXAMPLE 1.—If the feed-screw gear has 40 teeth, the first gear on stud 32 teeth, the second gear on stud 56 teeth, the lead of the machine being 10 inches, and the helix to be cut being 28 inches, what should be the number of teeth of the worm-gear?

SOLUTION.—Applying the rule just given, we get

$$\frac{28 \times 40 \times 32}{56 \times 10} = 64 \text{ teeth.} \quad \text{Ans.}$$

EXAMPLE 2.—A spiral having a lead of 39 inches is to be cut. The feed-screw gear has 40 teeth, the first gear on stud 32 teeth, the second gear on stud 56 teeth, and the lead of the machine is 10 inches; what number of teeth should the gear on worm-stud have?

SOLUTION.—Applying the rule given and substituting, we get

$$\frac{39 \times 40 \times 32}{56 \times 10} = 89\tfrac{1}{7} \text{ teeth.}$$

Since a gear with this number of teeth is an impossibility, the calculation shows that with the gears selected it is not possible to cut the required spiral. If a gear with 89 teeth is available, a fairly close approach to the required spiral may, however, be cut. Ans.

75. When the four gears and the lead of the machine are known, the resulting spiral or helix may be calculated as follows:

Rule.—*Multiply the lead of the machine by the number of teeth of the gear on worm-stud and the second gear on stud. Divide this product by the product of the number of teeth of the feed-screw gear and the first gear on stud.*

EXAMPLE.—In example 2 of Art. **74**, it was stated that a fair approximation to the required spiral might be cut with a gear on worm-stud having 89 teeth. Calculate the spiral that will actually be cut.

SOLUTION.—Applying the rule just given, we get

$$\frac{10 \times 89 \times 56}{40 \times 32} = 38.9375 \text{ in.} \quad \text{Ans.}$$

76. Special attention is called to the fact that it is a mathematical impossibility to calculate directly what the number of teeth of the four change gears should be to produce a given spiral.

Let n' = number of teeth in gear on worm-stud;
n = number of teeth in second gear on stud;
N' = number of teeth in feed-screw gear;
N = number of teeth in first gear on stud;
L = lead of machine;
S = lead of spiral or helix.

Then, the equation giving the relation is

$$S = \frac{n\, n'\, L}{N\, N'}.$$

In this equation there are four unknown quantities, viz., n, n', N, and N'. They are not known in terms of each other, i. e., their relation is unknown, and, hence, it is a mathematical impossibility to solve the equation for n, n', N, and N' without assigning values to at least three of these factors.

77. To sum up: When three gears are given, the fourth can readily be calculated, as has been shown. When the four gears are given, the resulting spiral or helix is easily computed. To discover the proper relation between the gears, factoring must be resorted to. When factoring fails, the cut-and-try method must be adopted and followed until

either a correct gear combination or one that will give an approximation which is considered close enough is obtained.

CUTTING HELIXES AND SPIRALS.

78. Cutters and Profiles.—By far the greater part of the spiral work done in a milling machine consists of the cutting of helical and spiral grooves. Familiar examples of the class of work done are the fluting of helical-tooth reamers and of twist drills, the cutting of the spaces of helical-tooth milling cutters, the cutting of screw gears, etc.

With a helical or spiral groove, its profile (shape) is given by the intersection of the groove with a plane *perpendicular to the helix* or spiral, while with a straight groove that is parallel to the axis of the work, its profile is its intersection with a plane *perpendicular to the axis of the work.* This must be carefully borne in mind when selecting a cutter for a helical or spiral groove.

79. When the profile of the groove is symmetrical, it can be cut with either a suitable end mill or a formed cutter of the required shape, but when the groove has an unsymmetrical profile, an end mill cannot be used.

When an end mill is employed for cutting the groove, the table, when arranged to swivel, as is the case in horizontal universal milling machines, must be set to zero, i. e., so that its direction of motion is in a plane perpendicular to the axis of rotation of the cutter.

80. A formed milling cutter must be employed for unsymmetrical grooves, and can also be advantageously used for many symmetrical grooves. It requires the table to be set to an angle with the axis of rotation of the cutter that is equal to the difference between the angle of the helix and 90°. As a general rule, the graduations of a milling-machine table are so arranged that when the table is set so that the graduation reads to the angle of the helix, it will make the

required angle to the axis of rotation of the cutter. A rule for calculating the angle of the helix has been previously given.

81. If the table is not set to the angle of the helix, the resulting groove will not have the same profile as the cutter. This fact can often be taken advantage of when a cutter of the right width is not available and the exact shape of the profile need not be particularly accurate.

82. Helical Grooves With Parallel Sides. — In milling a helical or spiral groove with the kind of plain cutter that will produce a straight groove with parallel sides, as a slitting saw, for instance, it will be found that the resulting groove will *not* have parallel sides, but will be about as shown, somewhat exaggerated, in Fig. 26 (*a*). From this fact, the conclusion is to be drawn that when a helical or spiral groove with parallel sides is to be cut, a face cutter cannot be employed; an end mill will, however, be found to answer for this purpose.

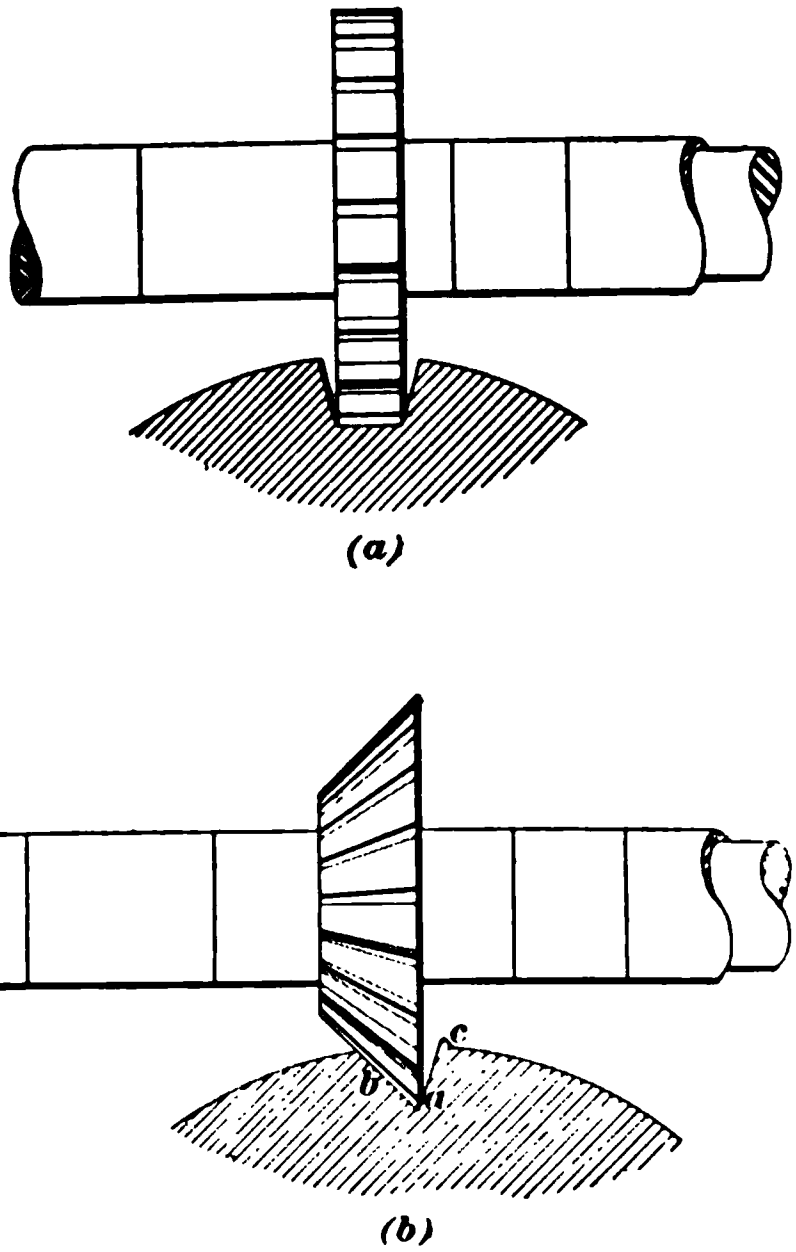

FIG. 26.

83. Helical Grooves With Inclined Sides.—When an attempt is made to cut an angular helical groove with a single-angle cutter, it will be found that the angle between the sides of the groove will not be equal to the angle of the cutter, but will be about as shown, somewhat exaggerated,

in Fig. 26 (*b*). It will further be noticed that the side *a* of the groove is very rough compared with the side *b*, and that a decided burr is thrown up at *c*. From these facts, the conclusions are to be drawn that a single-angle cutter cannot reproduce its own profile and that cutting teeth lying in a plane, as those on the right-hand side of the angular cutter shown, will not mill a smooth groove. The following general conclusions may also be drawn from the facts stated in this and the preceding article. No cutter, except an end mill, can reproduce its own profile in a spiral or helical groove when it has teeth on one or both sides that lie in a plane. From this it follows that any cutter, except an end mill, that is required to produce its own profile in a helical or spiral groove must be wider at the bottom than at the top of the teeth, and no teeth must lie in a plane. Hence, when angular grooves are to be milled, double-angle cutters should always be used; such cutters will reproduce their own profile, as shown in Fig. 27, and mill both sides of the groove smooth.

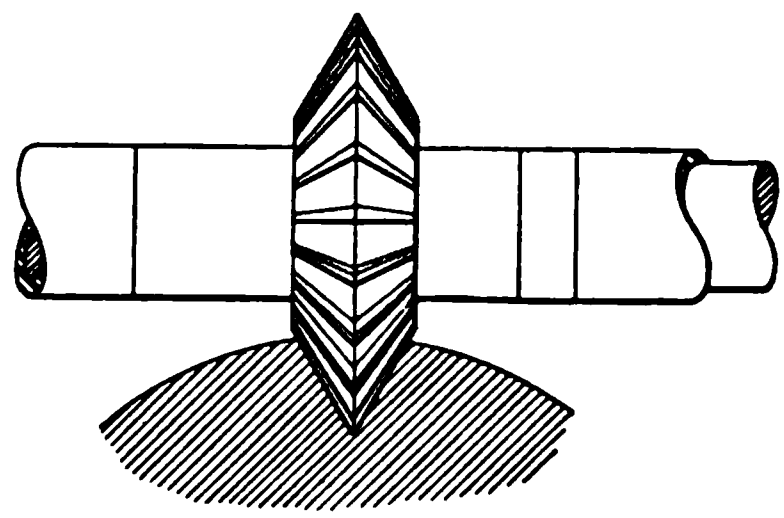

FIG. 27.

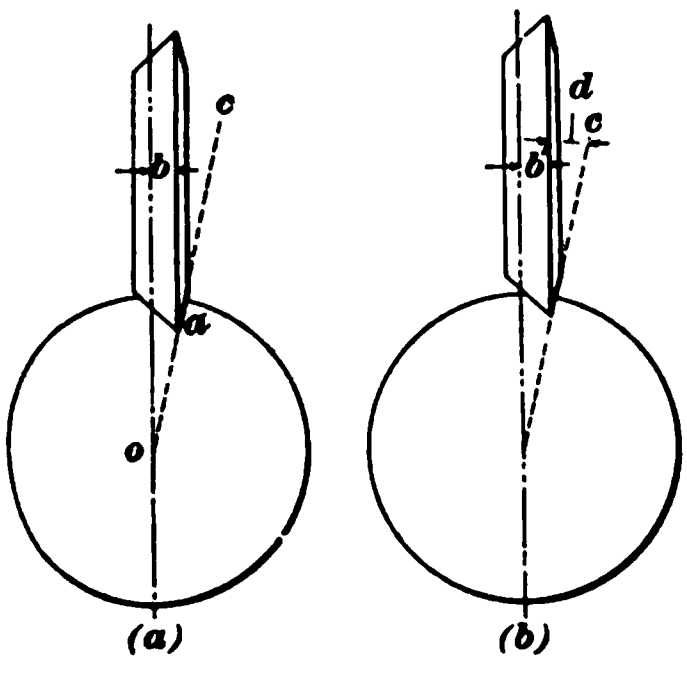

FIG. 28.

84. Helical Grooves With One Side Radial.—A great deal of the spiral work done with angular cutters requires one side of the groove to be radial. For this work, double-angle cutters must be selected, and they must be set sufficiently off center to make the required side of the groove radial when the cutter is sunk into the work to the proper depth. Referring to Fig. 28 (*a*), which shows a double-angle

cutter sunk into the work until the side *a* of the groove is radial, the amount that the cutter must be set off center is the distance *b*. It can be readily shown that this distance varies with the depth of the cut; thus, in order that the side *a* may remain radial for a greater or smaller depth of cut, the cutter must, evidently, be shifted radially, that is, along the line *o c*. Then, for a smaller depth of cut, as shown in Fig. 28 (*b*), the distance *b'* that the cutter is off center will be greater than *b*, and for a greater depth of cut, this distance will be smaller.

85. The distance that the cutter is to be set off center is given correctly by the following rule:

Rule.—*Subtract the depth of the cut measured radially from the radius of the work and multiply the remainder by the sine of the angle included between that side of the cutter with which the radial side of the groove is to be cut and a plane perpendicular to the axis of the cutter, as the angle d in Fig. 28 (b).*

EXAMPLE.—The angle *d*, Fig. 28 (*b*), being 12°, how much should the cutter be set off center when the work is 3 inches in diameter and the radial depth of the cut .4 inch?

SOLUTION.—From a table of natural sines, the sine of 12° is .20791. For the class of work usually done, it is near enough to call the sine .2. Applying the rule just given, we get

$$(\tfrac{3}{2} - .4) \times .2 = .22 \text{ in.} \quad \text{Ans.}$$

86. If the effect of the depth of the cut is left entirely out of consideration, the rule for setting the cutter off center becomes: *Multiply the diameter by half the sine of the angle d, Fig. 28 (b).* On this basis, the following approximate table has been calculated for the angles most commonly used for double-angle cutters.

The rules here given for the offset of double-angle cutters apply to straight grooves as well as to helical grooves. In the case of a helical groove, the cutter should be set correctly while the line of motion is at right angles to the axis of rotation of the cutter; the table is to be swiveled to the angle of the helix after setting the cutter off center.

TABLE SHOWING OFFSET OF DOUBLE-ANGLE CUTTERS.

Angle.	Offset.
12°	Diameter × .1
27½°	Diameter × .23
30°	Diameter × .25
40°	Diameter × .32
45°	Diameter × .35
48°	Diameter × .37
53°	Diameter × .4

87. Proper Direction of Rotation of Work.—In cutting helical grooves with double-angle cutters having unequal angles, the work should always revolve toward that side of the cutter where the teeth have the greater angle. Fig. 29 shows the four cases that arise in practice; in each case, the side *a* of the cutter has the greater angle, and the

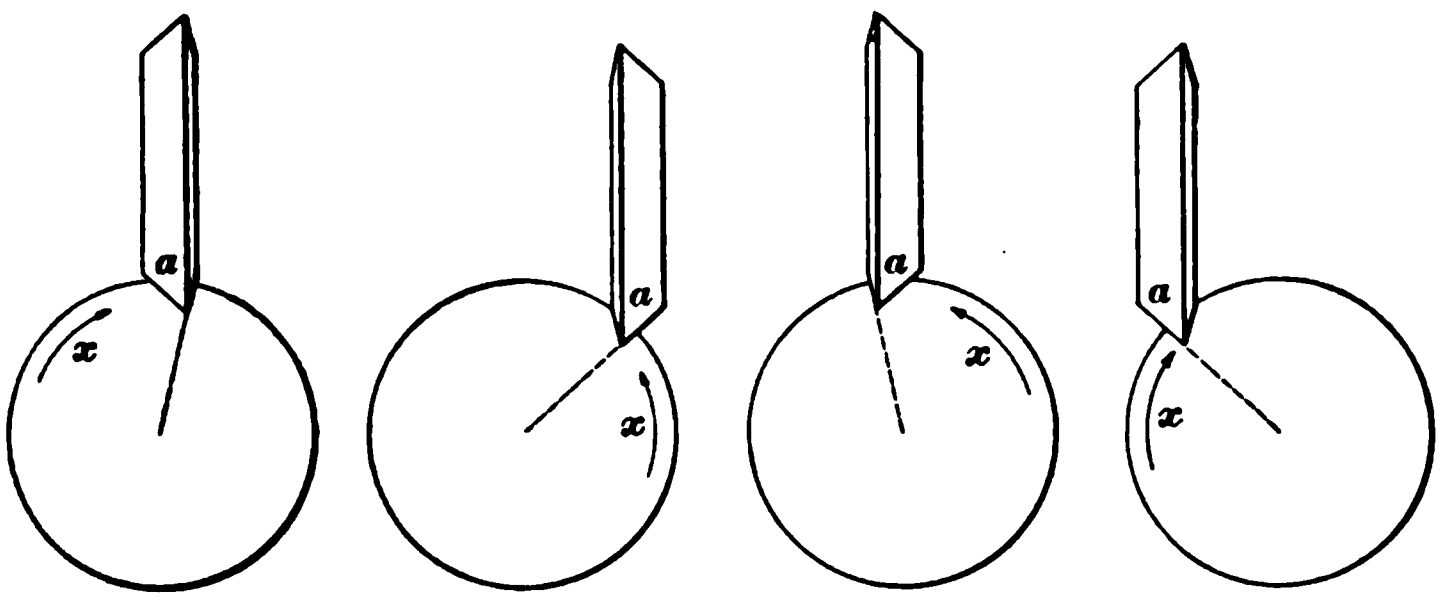

FIG. 29.

work should revolve toward it, or in the direction of the arrow *x*. This statement applies to right-handed and left-handed spirals and helixes; the direction of rotation that will bring the work toward the greater angle of the cutter can be secured by a proper arrangement of cutter and feed. The object of feeding the work toward the side of the cutter having the greater angle is to make the sides of the groove

smooth; experience has shown that smooth sides cannot be obtained except by rotating the work in the manner stated.

88. Great care must be taken in all spiral work to confine the work in such a manner that it can neither slip in the direction of its axis nor slip about its axis. Should this happen, not only the work will be spoiled, but most likely the cutter and arbor also. When the cut has been completed, before running the table back, take the work away from the cutter, or *vice versa*, in order that the cutter may not drag in the groove, which will mar and score the latter.

THE NATURAL FUNCTIONS.

89. Definitions.—In any circle, as in *a*, Fig. 30, draw any two radii, as *o b* and *o c*, so that the angle *c o b* included between them is less than 90°. From the intersection *c* of the radius *o c* with the circle, drop a perpendicular *c d* on *o b*. Prolong *o c*, and at *b* erect a perpendicular to *o b* which will be tangent to the circle, prolonging the perpendicular until it intersects *o c* prolonged in *e*.

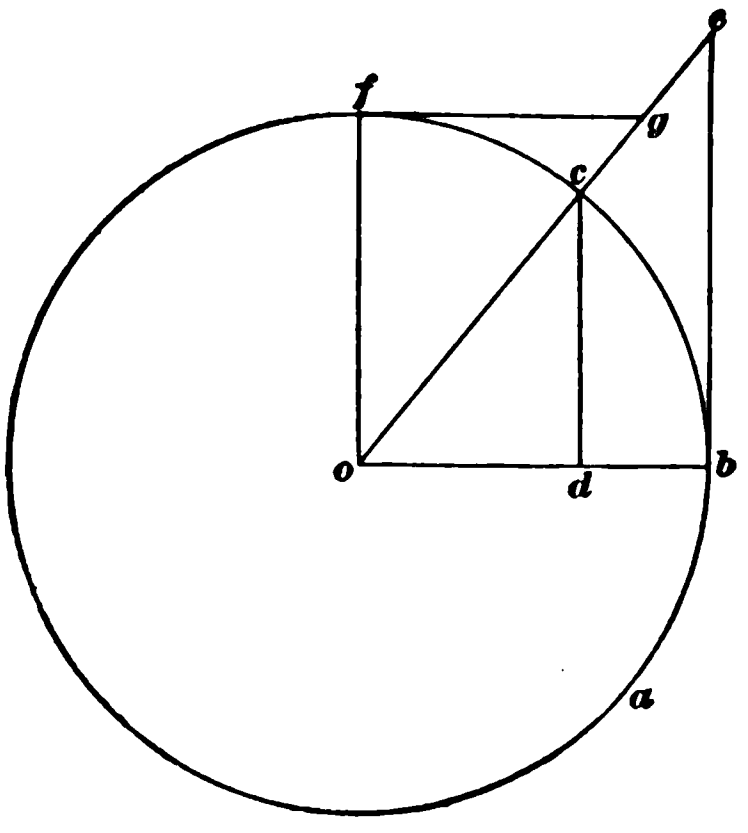

FIG. 30.

The line *c d* is called the **sine** of the angle *c o b* and is abbreviated to *sin;* the line *o d* is called the **cosine** of the angle *c o b* and is written *cos;* the line *d b* is called the **versed sine** of the angle *c o b* and is written *versin;* the line *b e* is called the **tangent** of the angle *c o b* and is written *tan.*

From the center *o* of the circle, draw a radius *o f* at right angles to *o b*. Then, the angle *f o c* is called the **complement** of the angle *c o b*, and, evidently, is equal to the difference between *c o b* and 90°. Draw a line tangent to

the circle at *f*, i. e., perpendicular to *o f*, and extend it until it intersects *o c* prolonged at *g*. The line *f g*, then, is the tangent of the complement of the angle *c o b*, and is called the **cotangent** of the angle *c o b*. It is written *cot*.

90. All these lines are called **functions of the angle;** their relative lengths vary with the magnitude of the angle *c o b*, but the ratio between their lengths and the length of the radius remains constant for a given angle, no matter what the radius may be.

Tables have been prepared in which the ratio of the lengths of the different functions to the radius for all angles between 0° and 90° is given on the assumption that the length of the radius is unity (1). Hence, if the length of any other radius is given, the length of the corresponding function can always be found by multiplying the value of the function for a radius of unity, as taken from the table, by the given radius.

Such tables are called **tables of natural functions,** and those most frequently used are given at the end of this volume. Tables of versed sines are not given, but the versed sine of any angle can be found by subtracting the value of the cosine of the angle, as taken from the tables, from 1.

91. Use of the Tables.—To find a function of an angle less than 45°, look for the number corresponding to the degrees of the angle in the horizontal row at the top of the page. Look for the minutes in the first vertical column at the left and follow it over to the right until the vertical column marked with the number of degrees is reached. The value of the function will be found there.

EXAMPLE.—Find the cosine of 41° 27′.

SOLUTION.—The column containing the values of cosines between 41° and 42° is found to be the second column on page 9 of the tables. Opposite 27′ and in the second column, we find .74953 as the value of the cosine. Ans.

92. To find the value of a function of an angle larger than 45°, look for the number of degrees in the bottom

consists of a circular table *a* fitted to the base *b* in such a manner that it can be rotated about its axis. For this purpose, a worm-wheel is placed inside of the base which is attached to the table; a worm, operated by the hand wheel *c*, meshes with the worm-wheel and serves to rotate the table.

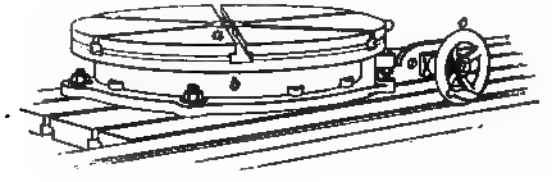

FIG. 1.

The particular form of rotary milling attachment here shown is only intended to be rotated by hand; such attachments are often fitted with an automatic feed, however, that can be adjusted to start and stop at any point.

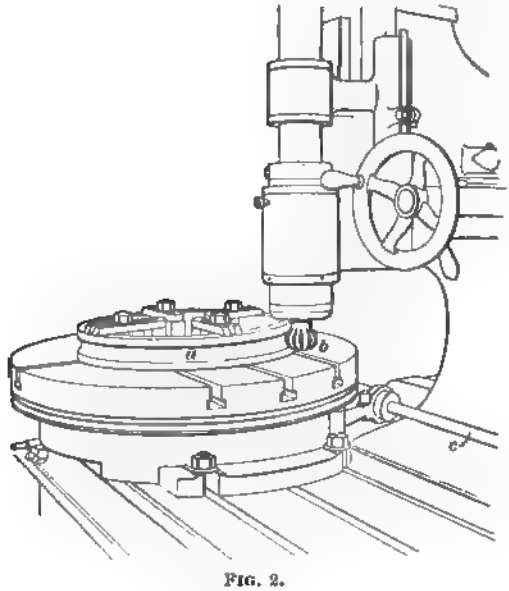

FIG. 2.

3. Fig. 2 shows an application of a circular milling attachment differing slightly from that shown in Fig. 1. In this case, the work *a* is a worm-wheel blank that is being

grooved around its circumference preparatory to cutting the teeth. A form cutter *b* is used for grooving. This job might be done in the lathe; experience, however, has shown that the work can be done as well, and much faster, in the milling machine. An automatic feed is of decided advantage for work that is to be milled around its entire periphery, or the greater part of it; in the attachment shown, the shaft *c*, which carries the worm, is automatically rotated by the feed mechanism.

4. The class of work that may be done with the aid of a circular milling attachment does not differ in general from that which can be done in a lathe. In addition, some circular work can be done for which the lathe is not at all adapted, as, for instance, finishing, between the spokes on the inside of the rim of hand wheels, and the cutting of circular slots closed at both ends.

5. Vertical Milling Attachment.—For many classes of milling, a vertical milling machine is of advantage chiefly on account of the fact that the operator is better able to see the cut. In order to obtain this benefit from a horizontal machine, it may be fitted with a suitable device for transforming it, for the time being, into a vertical spindle machine. While such an attachment cannot be expected to have as large a range as a vertical milling machine, it will greatly extend the range of a horizontal machine, and if properly designed, will allow work to be performed that cannot be done otherwise except by a special machine, such as the cutting of relatively long racks, the cutting of helixes having a very large angle of helix, the sawing off of stock too long to go into the machine in the ordinary way, that is, placed parallel to the spindle, and similar work.

6. Fig. 3 shows one form of a vertical milling attachment. It consists of a frame *a*, which carries a central shaft fitted to the hole of the milling spindle and inserted therein. The frame of the attachment is secured to the frame of the machine in such a manner that it can be turned completely

about the axis of the horizontal shaft, and can be rigidly clamped in any position. The vertical spindle *b* is carried in bearings at the outer end of the frame; being at right

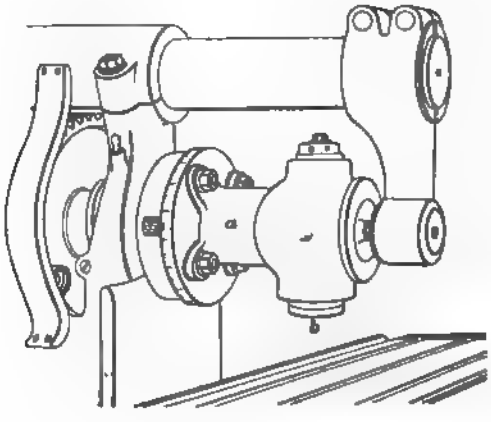

FIG. 3.

angles to the horizontal spindle, it is driven either by bevel gears or by screw gears, in this particular case being driven by the former.

7. The frame of the attachment is graduated to degrees, and a zero mark placed on the frame of the machine indicates, by its coincidence with the zero of the graduation, when the spindle is vertical; i. e., at right angles, in a vertical plane, to the horizontal line of motion. From this it follows that in this position any end mill will cut a horizontal surface parallel to the line of motion, and any plain mill or formed mill will cut in a vertical plane parallel to the line of motion. By swiveling the frame of the attachment so that the spindle becomes horizontal, i. e., lies in a plane parallel to the line of motion, vertical surfaces can be cut with an end mill, and horizontal cuts at right angles (or in case of a table arranged to swivel, at various angles) to the line of motion of the table can be taken.

8. A vertical milling-machine attachment of the kind shown can be used for helixes in three ways, two of which

incidentally adapt it to cases where the table cannot be conveniently swiveled. In the first place, the attachment may be rotated about its axis to suit the angle of the helix; that is, it may be set so that the spindle of the attachment makes a vertical angle with the line of motion of the table equal to the difference between the angle of the helix and 90°. A plain mill or formed mill attached to an arbor is then used, and the cut is taken on the *side* of the work.

In the second place, the attachment may be set with its spindle parallel to the line of motion, that is, horizontal. In that case, the milling-machine table must be set over until its graduation indicates an angle equal to the difference between the angle of the helix and 90°. Using a plain mill, or a formed mill, or a similar cutter attached to an arbor, the cut is then taken on *top* of the work.

In the third place, the attachment may be set with its spindle vertical, that is, in a plane perpendicular to the line of motion. It is then used with an end mill, which is applied on *top* of the work for grooving, and on the *side* of the work for plain milling.

As a general rule, the first and the third method given will allow a greater range of work to be done and allow longer helixes to be cut without interference by the frame of the attachment than is possible with the second method. Since neither the first nor the third method involves a setting over of the milling-machine table, they allow a plain milling machine to be converted into one adapted for spiral work.

9. Cam Classification.—The cams in most general use may be classified as *face cams*, *side cams*, and *grooved cams*. A **face cam** may be defined as a cam that will cause motion in a direction at right angles to its axis of rotation, as, for instance, the cam shown in Fig. 4 (*a*). A **side cam** may be defined as a cam that will cause motion in the direction of its axis, as the cam shown in Fig. 4 (*b*). A **grooved cam** may have the groove cut into its face, as the one shown in Fig. 4 (*c*); in this case, it will cause motion

in the direction of its axis, and may be called a **grooved side cam,** since it causes a motion similar to that of a side cam. The groove may be cut in the side of the cam, however, as shown in Fig. 4 (*d*); in that case, the motion will be similar to that caused by a face cam and, hence, it may be called a **grooved face cam.** The term "cylindrical

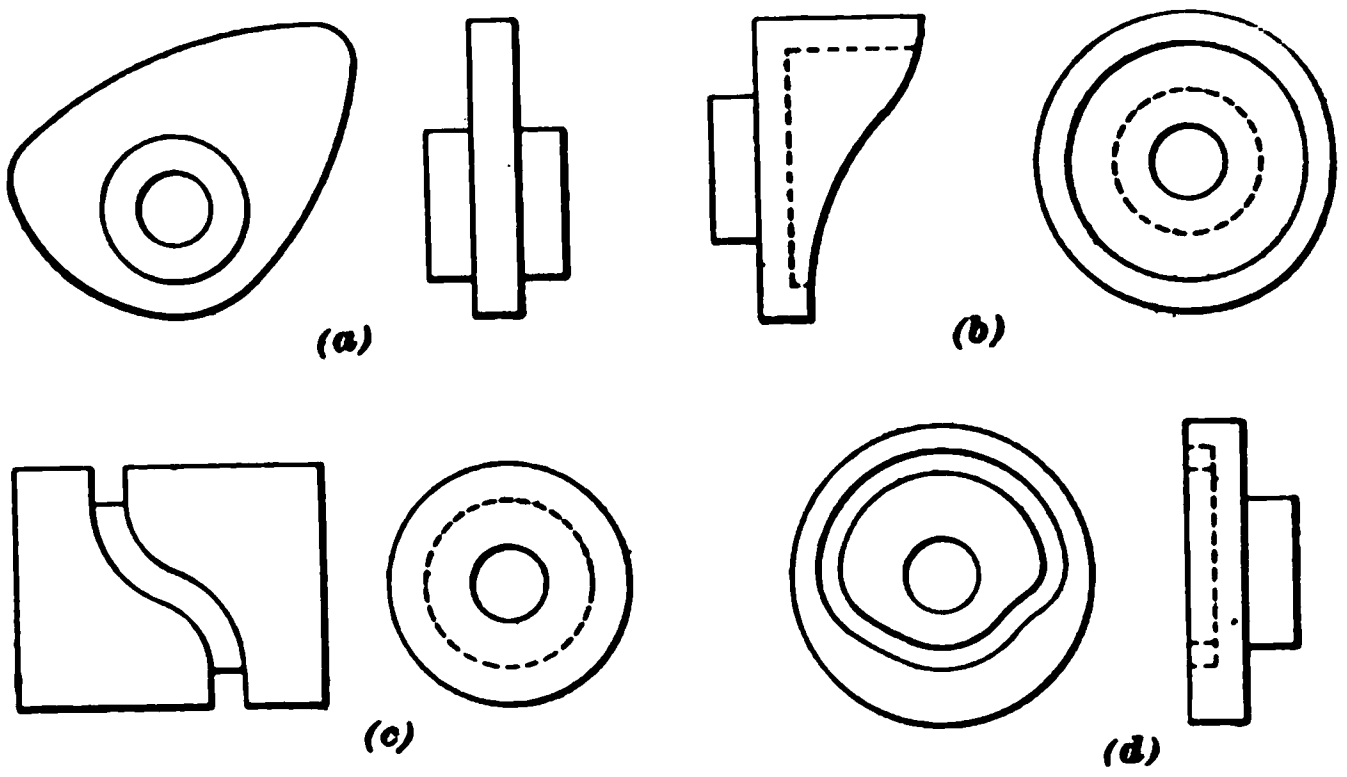

FIG. 4.

cam" is often applied to cams of the kind shown in Fig. 4 (*c*). Cams of the form shown in Fig. 4 (*a*) and (*d*) are often called *radial* cams, and cams that cause motion in the direction of their axes, as those shown in Fig. 4 (*b*) and (*c*), are sometimes called *axial* cams.

10. Cam-Cutting Attachment. — Nearly all the cam cutting that is done in the milling machine may be classified under the heading of duplicate work; in making a cam, the shape of the working surface is, as a general rule, determined by a master cam, which serves as a guide, or templet, for guiding the work in relation to the cutter.

Fig. 5 shows one form of a cam-cutting attachment in place on a milling machine, and will serve to show the principle involved in the construction of nearly all, if not all, such attachments.

A false table *a* is bolted to the regular milling-machine

table; a slide *b* is gibbed to the false table, and is free to slide along it. The slide *b* carries a shaft *c* in a bearing formed in it; this shaft is at right angles to the line of motion of the slide and carries a worm-wheel *d* with which a worm *e* meshes. The shaft *c* can be rotated by hand or automatically; in the latter case, the pulley *f* is belted to some suitable feed-pulley of the machine. In order that the shaft *c* may be driven automatically in any position of the slide, the worm-shaft is splined and is driven by a feather

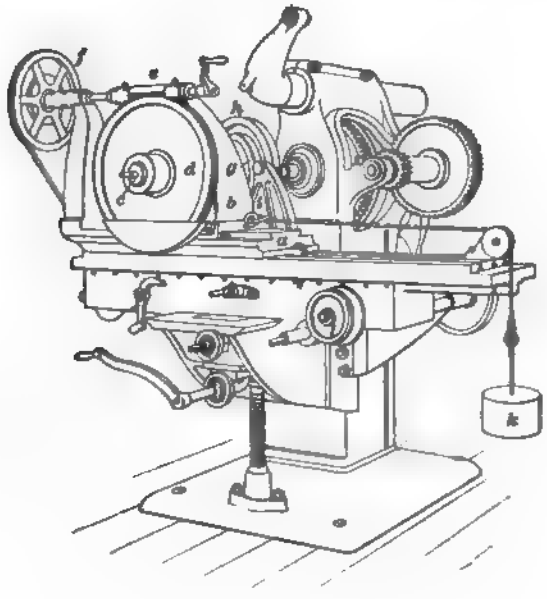

FIG. 5.

attached to a sleeve that carries the pulley *f*. The shaft *c* is so arranged that it can either be left free to slide in the direction of its axis or can be confined longitudinally; in the latter case, it can only rotate about its axis. The master cam *g* and the work *h* are both fastened to the shaft *c*; a roller carried by the stationary bracket *i* engages with the master cam, which is held against the roller by a heavy weight *k* attached to the slide *b*. It is easily seen that by

turning the master cam the slide is set in motion, and that a milling cutter will cut the work to an outline depending on the shape of the master cam. With the attachment in the position shown in the illustration, face cams having their working surface either on the inside or on the outside, and, also, grooved face cams can be cut.

11. For milling plain or grooved side cams, a properly made master cam is fastened to the shaft *c*, which is then unlocked in order to allow it to slide. The whole attachment is now turned around until it is at right angles to the position shown in the illustration. The weight *k* is then attached to the shaft *c*, and the roller in the stationary bracket *i* engaging with the side of the master cam, the shaft and the attached work will slide in and out, as induced by the master cam. The automatic feed may be driven, in this case, from the pulley *l*. It will be understood that when cutting side cams in this manner, the slide *b* must be locked to the false table *a*.

12. While this device will *cut* cams from a master cam, it will not *produce* a master cam. This must be produced in some other manner first; in many cases the curves of the master cam are such that it can advantageously be finished to the correct shape by milling, or, perhaps, the greater part can be finished by milling and the rest by filing.

13. Planer Milling Attachment.—Fig. 6 shows a milling attachment used for converting a planer into a milling machine. It consists of a head *a* and an outboard bearing *b*, both of which are attached to the regular planer cross-rail. The head *a* carries the spindle *c*, which is bored out to take an arbor or the shank of a cutter. The spindle is driven from the pulley *d* by the intervention of suitable gearing. Since the regular speed of the planer platen is entirely too high to be suitable for the feed, a countershaft will usually have to be introduced in order to lower the speed of the platen, or some other equivalent device must

be used. The cutter is adjusted for depth of cut by moving the cross-rail up or down the housings; the sidewise position

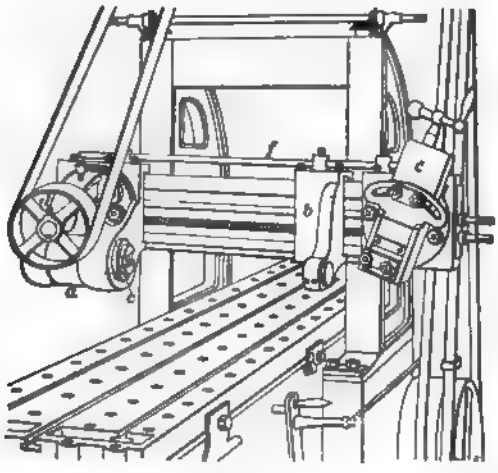

FIG. 6.

of the cutter is adjusted by moving the regular planer head *c*, to which the head *a* and outboard bearing *b* are tied by the rod *f*.

In the particular design of attachment shown, the head *a* is arranged so that it can be swiveled. This allows angular cuts to be made with a plain mill or a side mill, and greatly extends the range of work that may be done.

14. The attachment illustrated will quite satisfactorily convert a planer into a milling machine; it is rather doubtful, however, whether such a makeshift will do as much and as good work as a regular machine designed especially to withstand the strains to which it is subjected by the milling operation. On the other hand, it allows work to be done in one setting that cannot be done otherwise without two separate machines, since it allows some parts of the work to be finished by milling, as, for instance, straight grooves having an irregular profile, and allows the rest of the work, as undercuts, etc., to be finished by planing.

TAKING THE CUT.

DIRECTION OF FEED.

15. Methods of Feeding.—There is a great diversity of opinion among the builders of milling machines as to the direction the feed should have with respect to the direction of rotation of the cutter. Perhaps the majority of builders of milling machines are in favor of feeding the work **against** the cutter; that is, with the cutter rotating in the direction of the arrow *x*, Fig. 7, they hold that the work *a* should be fed in the direction of the arrow *y*. In this case, the tendency of the cutter is to push the work *away* from the cut. On the other hand, there are other builders, among whom may be mentioned the Pratt & Whitney Company, who are in favor of feeding the work **with** the cutter, or if the cutter revolves in the direction of the arrow *x*, they feed the work *b* in the direction of the arrow *z*. In this case, there will exist a tendency to draw the work toward the cutter.

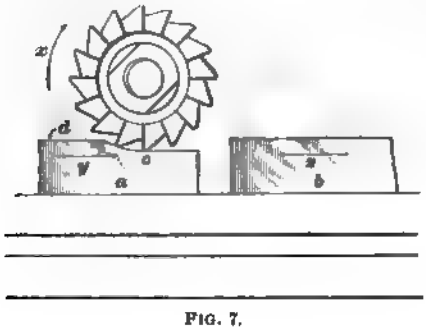

FIG. 7.

16. Choice of Method.—It is by no means settled as to which method of feeding will produce the best results; it is probable that under proper conditions just as good results can be secured with one method as with the other. From this it must not be inferred, however, that a machine built and intended for feeding against the cutter is, without further preparation, adapted for the other way of feeding; an attempt to do so with such a machine is not likely to be repeated by the experimenter on account of the destructive results of the experiment.

As previously stated, by feeding the work in the direction of the arrow *z*, Fig. 7, while the cutter is revolving in the

direction of the arrow x, that is, feeding *with* the cutter, there will be a tendency to draw the work toward the cutter. Taking a machine arranged for feeding against the cutter and attempting to feed with the cutter, the latter will suddenly draw the work toward it at the beginning of the cut to an extent depending on the amount of backlash between the feed-screw of the milling-machine table and the nut in which it works. In consequence of this, the cutter will climb up on the work; either the cutter will break, or the arbor will be bent, or the work will be broken. In any case, the result is exactly what might have been anticipated.

17. The whole trouble is due to the backlash always existing between the feed-screw and its nut; by taking up the backlash in the proper manner, or, more correctly speaking, by transferring it to a place where it can do no harm, a machine built to feed *against* the cutter can be made to feed *with* the cutter. The usual and most obvious way to prevent the table from jumping forwards, is to hold it back by a heavy weight attached to a cord or chain fastened to the table; the cord or chain then passes over a pulley placed in line with the table.

18. Considering the case of a milling machine arranged to feed *with* the cutter, it can be used with impunity for feeding *against* the cutter, on account of the fact that there is no tendency for the work to jump toward the cutter.

19. Milling Work With a Hard Surface.—When the work to be milled has a hard surface, as iron castings, steel castings, and some forgings, or has a surface in which sand is embedded, as is the case with brass and similar castings that have not been pickled, the consensus of opinion seems to be that it is better to feed the work against the cutter, since then the cutting teeth will get in below the hard surface, and, working in the soft metal, will keep sharp much longer. Assume the tooth c, Fig. 7, to be cutting and the surface d of the work to be covered with a hard scale. Then, it can be seen that the tooth c comes up from below

the scale and instead of cutting through it, will pry the scale off and crumble it. In this connection, it may be well to mention that a prominent firm states as the result of experiments, in feeding *with* the cutter and *against* it when milling iron castings having a hard scale, that by feeding against the cutter, the latter lasted, without sharpening, eight times as long on an average as when feeding with the cutter.

When the work to be milled is of uniform hardness throughout, the objection of dulling the cutter rapidly by feeding with it disappears, and just as good work can be done by feeding *with* the cutter when everything is properly arranged for that system of feeding.

APPLICATION OF THE CUTTER.

20. General Rule. — There is one general rule in regard to taking the cut that applies to either system of feeding. This may be stated as follows: *Always take the cut in such a manner that the cutter cannot draw the work toward itself.*

In other words, whenever circumstances permit, so arrange the feed and machine that neither the cutter, work, nor machine will be damaged by any slipping of the work.

21. Influence of Spring.—Fig. 8 is an example that brings out some of the points to be taken into consideration in determining the proper direction of the feed. In this case, a cylindrical piece of work is held in the chuck; it is required to cut a rectangular groove, the bottom of which is shown by the dotted line *a* across the end of the work. With the cutter rotating in the direction of the arrow *x*, and feeding in the direction of the arrow *y*, i. e., feeding *with* the cutter, there will, obviously, be a tendency to draw the work toward the cutter. Now, while it is possible to transfer the backlash that allows the work to jump toward the cutter to a place where it will do no harm by weighting

the table back, it is not possible to get rid of the spring of the work itself, and of any spring that may exist in the index head carrying the chuck.

With the cutter rotating as shown by the arrow *x*, it should, in this case, be to the left of the work, or in the position shown in dotted lines, and the work should be fed *against* the cutter, as shown by the arrow *z*. The work will then spring *away* from the cutter, and there will be no danger of its catching and breaking the latter.

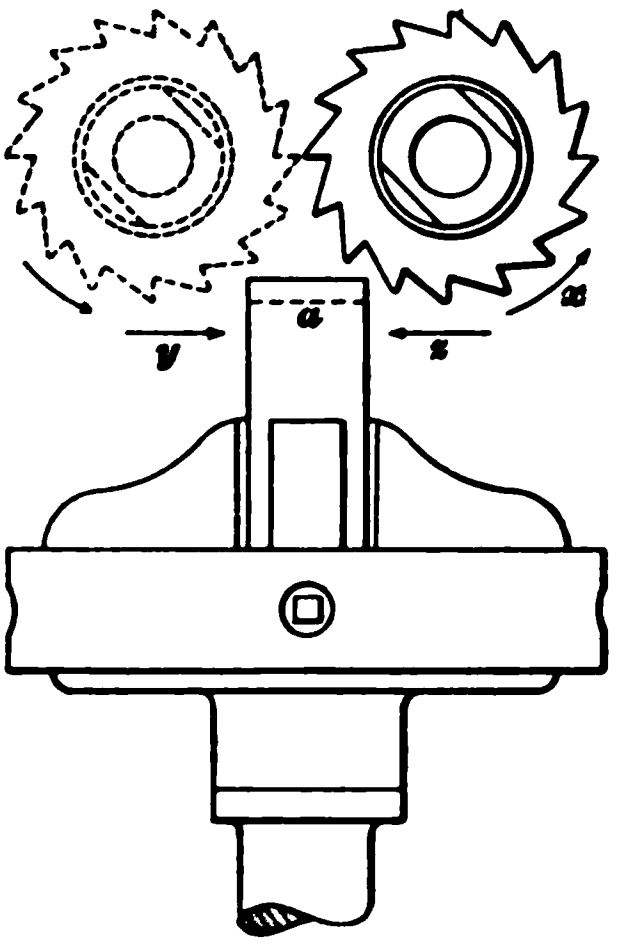

FIG. 8.

From this example, it is learned that the spring of the work and of the attachment in which it is held must be taken into consideration, and that allowance must be made for it in determining the proper direction of feed.

22. Example of Feeding With the Cutter.—Occasionally it is a decided advantage to feed *with* the cutter when the machine can be arranged to allow this to be done. Thus, for instance, consider the piece *a* shown in Fig. 9 to be held in the vise and resting on the packing-block *b*. It is required to rough the upper surface down to the dotted line shown. Then, with the cutter revolving in the direction of the arrow *x* and feeding in the direction of the arrow *y*, the pressure of the cut is mainly downwards, there being no

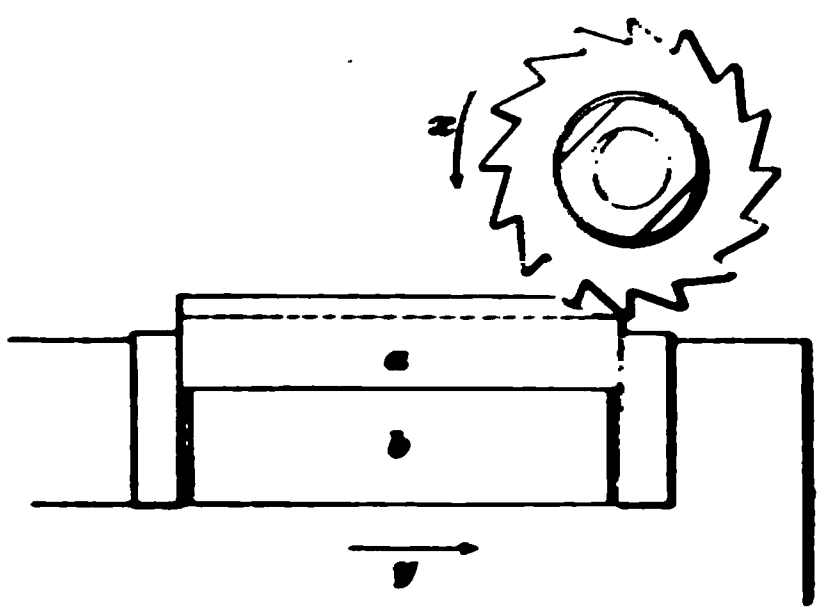

FIG. 9.

tendency at all to lift the work. In consequence, the work will be pressed firmly against the packing-block.

As previously stated, no attempt should be made to take a cut in this manner unless the machine is arranged to suit this method of feeding, and the work is of uniform hardness.

23. Slipping of Work.—Fig. 10 is an example showing that there is occasionally a right and a wrong way of applying the cutter to the work, even after the direction of feed that is considered proper has been adopted. In this case, it has been determined to feed against the cutter; the work *a* is held between the vise jaws, as shown, and a cut is to be taken at an angle other than 90° with the top surface of the work. This particular job occurs in making forming tools for fly cutters and formed milling cutters. The depth and direction of the cut are given by the dotted line *b*. Now, with the cutter above the work and rotating in the direction of the arrow *x*, to feed against the cutter the feed must be as shown by the arrow *y*. While feeding in this manner, assume that the work slips, as is very liable to happen. Then, the work will rotate about a point somewhere near *c*, and the end operated on will move in an arc about as *de*, or toward the cutter. The natural result of this will be that something must give way, and either the cutter or the work, or both, will be ruined.

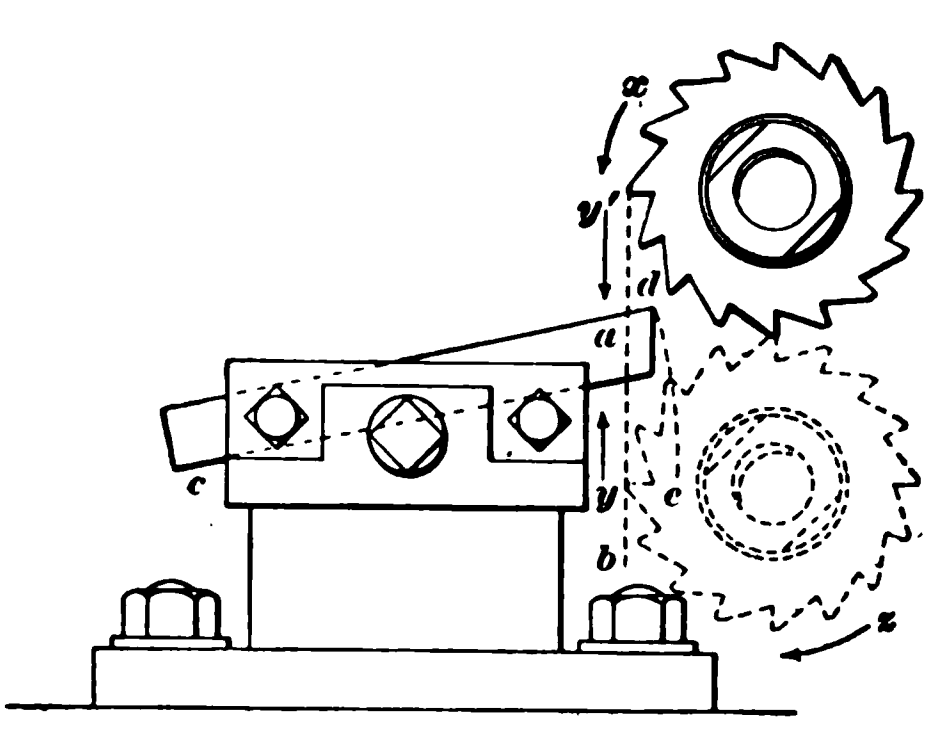

FIG. 10.

In order to overcome the evil effect of slipping, the cutter should, in this case, commence to cut at the bottom; it should revolve in the direction of the arrow *z* and the feeding should occur in the direction given by the arrow *y'*. In

case of slipping, the work will then move *away* from the cutter, and there is little likelihood of its being spoiled by it.

24. The rectangular work *a* shown in Fig. 11 requires a slot to be cut in its end; the depth of the slot is indicated

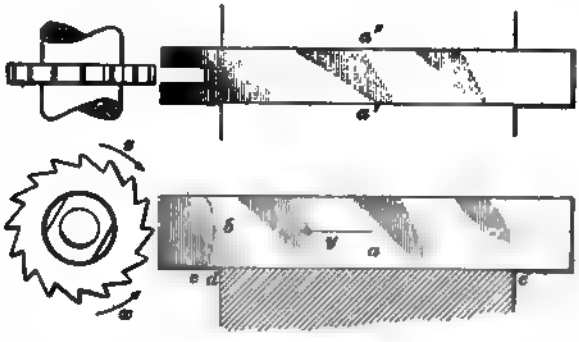

FIG. 11.

by the curved dotted line *b*. If the work is at all long, and a horizontal machine is used, it will have to be held in the vise so that its surfaces *a'* and *a''* are in contact with the vise jaws. So far as the direction of the feed is concerned, no choice is possible in this case; it must be in the direction indicated by the arrow *y*. Now, considering the direction of rotation of the cutter, it may either be as shown by the arrow *x* or the arrow *z* (in the latter case the cutter would naturally be reversed).

This is a case of milling where it is not possible to overcome the evil effect of slipping of the work, for, no matter which way the cutter rotates, the catching of the cutter due to excessive feeding will not push the work out of the way, but will either lift up or depress the end operated on. If slipping occurs, it is preferable to have it take place in an upward direction; the work will then rotate about the corner *c* of the vise and the corner *c* of the slot will rapidly come clear of the cutter. In order that slipping will take place in this manner, the cutter must revolve in the direction of the arrow *x*. Now, assume that the cutter revolves in the direction indicated by the arrow *z*. Then, should the

work slip, its end will rotate downwards about the corner *d* of the vise; that is, it will be drawn in between the vise and cutter with results that are likely to be disastrous to the vise, cutter, and work.

From the foregoing explanations, the conclusion may be drawn that when it is not possible to make the work slip *away* from the cutter, it should be the aim to so arrange everything that slipping will do the least possible amount of damage.

SLOTTING WITH END MILLS.

25. Cases Arising in Practice.—In cutting slots or grooves with end mills, three cases arise in practice, as follows: Cutting from the solid metal; finishing in one operation two sides of a slot that has previously been roughed out; and finishing each side of a slot separately.

26. Slotting From Solid Metal.—When cutting a slot or a groove out of the solid metal, as is shown in Fig. 12, either a right-handed or a left-handed cutter may be used,

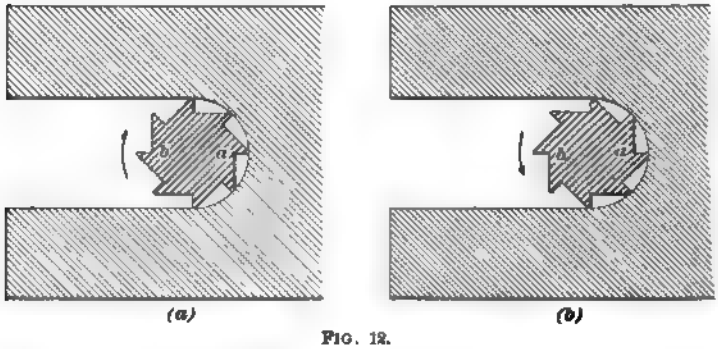

FIG. 12.

depending on which is available. The direction of the feed in respect to the rotation of the cutter is only influenced by the manner in which the cutter must turn in order to cut.

Considering a left-handed cutter, as shown in Fig. 12 (*a*), which is a view looking *toward* the spindle, it can be seen

that the cutter, which naturally has a tendency to spring away from the cut when cutting on the side *a*, will crowd upwards, as there is always some spring to an end mill. In consequence of this, the slot or groove will be slightly above the position for which the cutter is set. When the cutter approaches the work so that its side *b* is cutting, the cutter will crowd downwards; the slot or groove will then be cut slightly below the position of the cutter.

When a right-handed cutter is used, as shown in Fig. 12 (*b*), and when feeding so that the side *a* does the cutting, the cutter will crowd downwards. Should the cutter be applied, however, in such a manner that the side *b* will do the cutting, it will crowd upwards.

27. A slot or groove cut from the solid metal and not finished any further must not be expected to be very true throughout its length. The reason for the deviations from truth that will be found lies in the fact that the metal operated on, no matter how good it may be, is neither perfectly homogeneous nor of uniform hardness. In consequence of this, the cutter will crowd over to a varying extent with the result that the sides will not be true. On account of this fact, a slot or a groove cut with an end mill should always be finished by milling either both sides simultaneously after roughing out or each side separately, when a good job is desired.

28. Finishing Slots in One Operation.—When both sides of a slot or groove are to be finished simultaneously, the cutter must obviously have a diameter equal to the finished width. In setting the cutter, the mistake of setting it in such a manner that it will take cuts of equal depths must not be made, if good work is desired. This mistake is so common that it has led many persons to seriously doubt the possibility of milling true and nicely finished slots and grooves with an end mill.

29. Fig. 13 (*a*) shows a groove that is being finished with a left-handed end mill set central in respect to the roughed-

out groove. In this case, the feeding takes place in the direction of the arrow *x*. Considering the teeth of the upper half of the cutter, it is seen that the feeding is done *against* the cutter; considering the lower half of the cutter, the feeding is seen to be *with* the cutter. Now, during feeding, there will be, at the bottom, a greater tendency for the cutter to draw the work toward itself than there will be

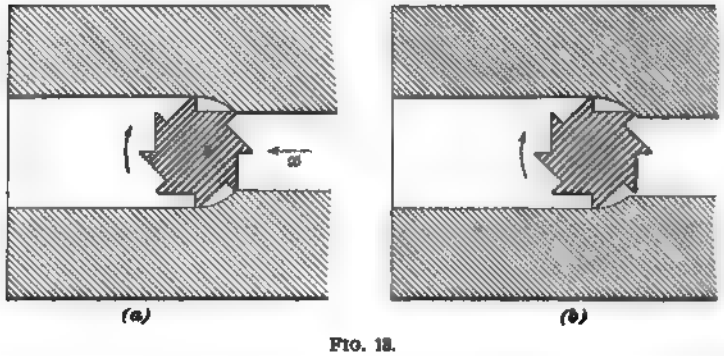

FIG. 13.

at the top to push the work away; if the work cannot move, the cutter will spring forwards and the consequence will be either broken teeth or a rather ragged groove, in case the teeth are strong enough to stand the strain. When the amount of metal removed is very small, the evil effects of this manner of setting are naturally not so pronounced as in cases where a fairly heavy cut is taken.

30. The proper way of setting the cutter is shown in Fig. 13 (*b*). Here the cutter is set so that the depth of cut on the side where the feeding is done against the cutter is about twice as great as on the other side; in consequence of this, the tendency of the cutter to jump forwards is overbalanced by the resistance due to the greater depth of cut, and the result will be a fairly smooth and true groove.

From the foregoing statements, the conclusions are to be drawn that when a smooth and true groove or slot is to be finished on both sides with an end mill, the center of the roughed groove or slot should lie on that side of the center

of the finished groove or slot where the feeding, while finishing it, will be *with* the cutter.

31. Finishing Slots in Two Operations.—It is the opinion of many milling-machine operators that the best results in cutting slots and grooves with end mills can be obtained by finishing each side separately; this involves using a milling cutter a little smaller than the finished size.

Whenever circumstances permit it, the roughing out should be done with a face cutter, which can be crowded harder and will cut faster than an end mill, chiefly by reason of its being more rigid.

FEEDING INTO CORNERS.

32. Undercutting of Face Cutter.—When taking a shallow cut against a high shoulder, or **feeding into a corner,** as it is called, it will be found, as is shown in Fig. 14, that the curved shoulder cut by the cutter, instead of being tangent to the bottom *a* of the cut, or as shown by the dotted curve, falls below the bottom, being about as is shown by the full curved line. The reason for this phenomenon lies in the fact that no matter how stiff an end cutter or a cutter arbor may be, it will still deflect to a certain extent under the action of a relatively small force. Now, in the case of feeding into a corner, the pressure on the arbor due to the cutting operation is about in the direction of the arrow *x*; that is, there exists a tendency to draw the cutter to the work, and since the arbor can yield, the cutter will be drawn in enough to show distinctly the undercutting illustrated in the figure.

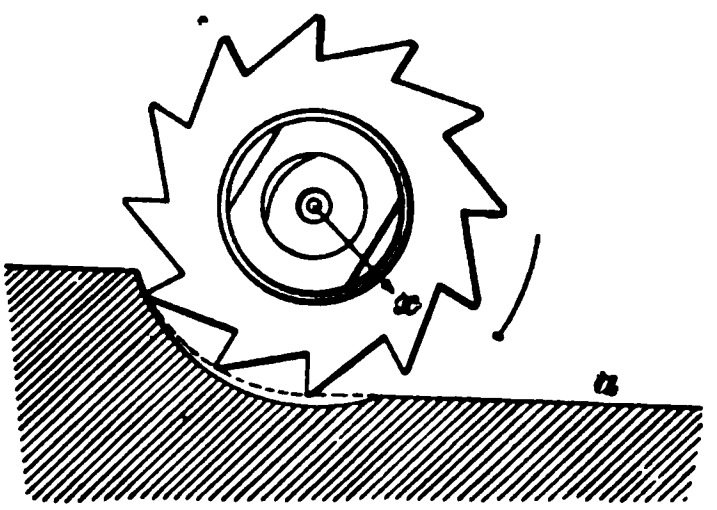

FIG. 14.

This undercutting is least marked with a low shoulder, but rapidly increases as the height of the shoulder becomes

greater. It can be overcome to some extent by using a stiffer arbor, or, if possible, by supporting the arbor by an outboard bearing; the only way in which it can be entirely overcome, however, is by taking the cutter slightly away from the work, or *vice versa*, when the shoulder is almost reached. This naturally calls for some skill and judgment on the part of the operator; the exact amount that the cutter and work must be separated can be determined only by experiment in each particular case.

33. Undercutting of End Mill.—The phenomenon of undercutting manifests itself to a more marked degree at the termination of slots cut with an end mill, as shown in Fig. 15. As previously stated, the cutter shown will crowd upwards, and, hence, its actual path will be given by a line, as *a*, Fig. 15, while *b* represents the path of the cutter for which the machine is set. When the cutter is at the termination of the slot, that is, when the feed has been stopped, it will tend to spring back to its normal position, and, in consequence, it will cut under until all spring is gone.

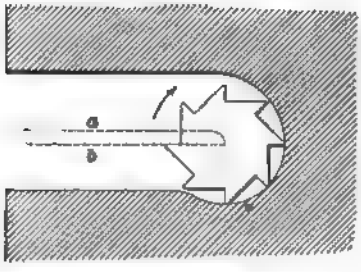

FIG. 15.

The undercutting can be minimized, as in the previous case, and can be largely prevented by a slight movement of the cutter or work in the proper direction at the moment the feed is stopped. For instance, if the tendency of the cutter is to go down, the work should be lowered slightly or the cutter raised; if the tendency of the cutter is to go up, the work should be raised or the cutter lowered. The exact amount of movement is a matter of experiment and judgment in any case.

34. Referring again to Fig. 15, let the feed be reversed when the cutter has reached the termination of the groove, or slot. Then, since in this operation the cutter is slightly below the lower surface, it will cut it away to some extent

when fed over it again, thus widening the groove. From this we learn that a milling cutter used for cutting two sides of a groove, or slot, simultaneously, will, if fed over the work in opposite directions, cut a path wider than its own diameter.

STARTING THE CUT.

35. After the machine has been adjusted so that the cutter will take the desired depth of cut, the machine is started and the cutter is brought almost in contact with the edge of the work. The cut is then started either by throwing in the automatic feed or by careful feeding by hand. On the whole, the method of starting the cut by means of the automatic feed is considered preferable, as there are less chances for an accident to occur. When a cut is started by hand, any carelessness may result in pushing the work in deeply between two teeth of the revolving cutter, as is

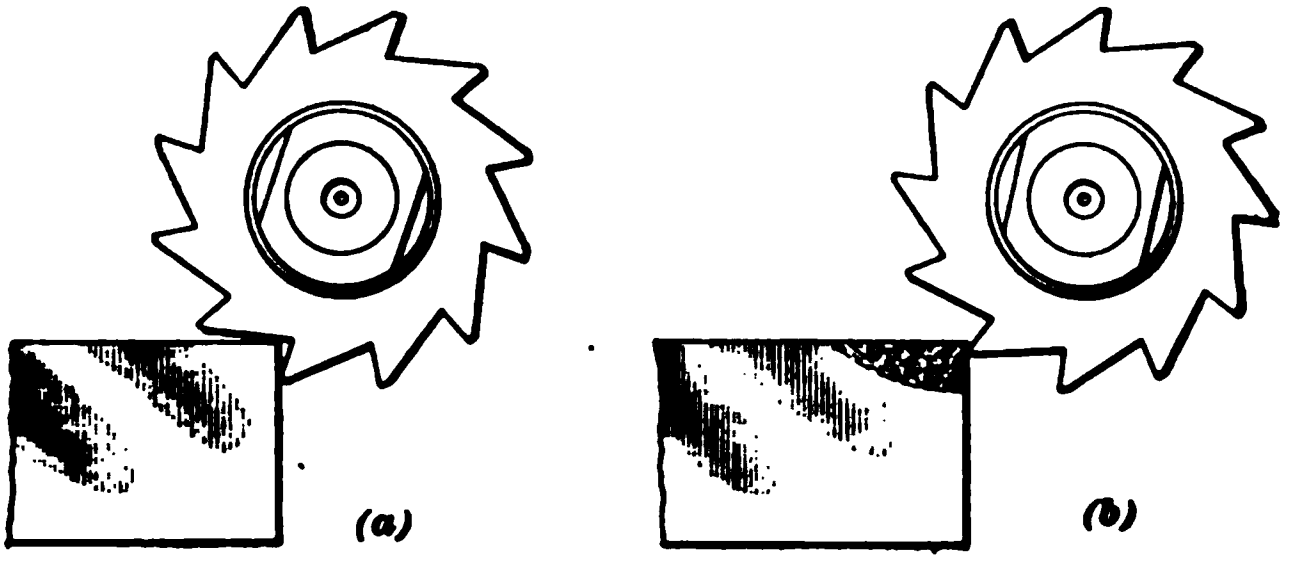

FIG. 16.

shown in Fig. 16 (*a*), with the result that the cutter will be broken, or the work spoiled, or both. But, if the automatic feed is used, or very careful hand feeding equivalent to automatic feeding is done, the teeth of the cutter will approach the work gradually and take successive, easy cuts, as shown in Fig. 16 (*b*), without undue straining of the cutter and the work. Since even very careful hand feeding will never be as uniform as automatic feeding, the latter is preferable whenever circumstances permit it to be used.

RUNNING OUT THE CUT.

36. When a heavy cut is run over a piece of relatively brittle metal, as cast iron, it will be noticed that where the cut runs out, the edge will be broken to a considerable extent, especially when a rather wide straight-tooth cutter is used. This chipping can be reduced to a minimum by beveling the edge where the cut runs out to an angle of about 45°, just as is done in planer and shaper work.

REVOLUTION MARK AND BRACING.

37. Cause of Revolution Marks.—When a milled surface is carefully examined, it will be found to have a wavy appearance, with what might be called the "crest" of the waves recurring at regular intervals. It has been noticed that the distance between the crests is generally equal to the traverse of the work for one revolution of the cutter; on account of this fact, the general name of **revolution marks** is applied to the collection of marks distinctly due to the milling operation.

Revolution marks are due to one or more, or, perhaps, all of several causes, as follows: a cutter that does not run absolutely true, a yielding machine, springy work, and the use of too light an arbor.

38. The width of each revolution mark seems to depend entirely on the amount of feed per revolution; from this it follows that cutting down the feed will cause smoother milling. In case the feed is cut down, the speed of the cutter may be increased. The depth of the revolution marks depends on the amount of vibration existing, and as the vibration is chiefly due to the fact that the cutter does not run absolutely true, an attempt to reduce the depth should commence with truing the cutter. This should be followed by supporting the cutter, whenever circumstances permit, by means of an outboard bearing, which in turn

should be rigidly braced after the machine has been set for the correct depth of cut.

39. Bracing. — Most modern machines are supplied with braces that will tie the outboard bearing either directly to the frame or to some machine part that in turn can be clamped to the frame. Most commonly, two slotted braces are pivoted to the knee; a clamping bolt then passes through the slots of the braces and ties them to the outboard bearing.

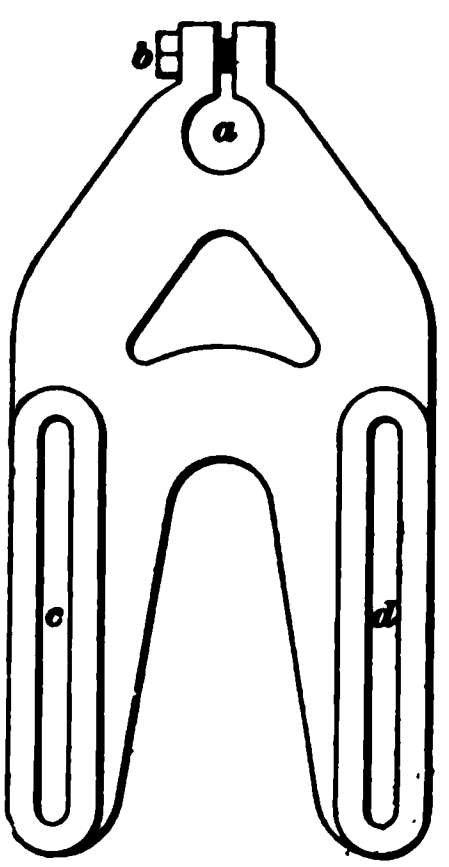

FIG. 17.

Fig. 17 is a less common design intended for a horizontal machine. The brace is an iron casting; a hole *a* is bored at the top to fit a projecting shoulder of the outboard bearing, to which it can be clamped by means of the bolt *b*. Stud bolts are screwed into the face of the knee and pass through the slots *c* and *d*; the studs carry nuts and washers and are used for clamping the brace to the knee. The slots in the brace allow the knee to be adjusted for height.

40. Reduction of Revolution Marks.—While the revolution marks can be cut down to a minimum by a true-running cutter, well-supported work, and a properly braced machine, they will never entirely disappear, for no matter how well the bracing is done and how stiff the machine, there will still be some vibration. Furthermore, no matter how true a cutter is ground, it will not stay true. It is a practical impossibility to harden a cutter so that all of its teeth will be of exactly the same hardness; consequently, the softer teeth will wear down faster than the hard ones and, hence, the cutter will soon run slightly out of true. To sum up: The revolution marks can be decreased by a fine feed, a true-running and well-supported cutter, properly blocked up work, and a rigid, well-braced machine.

SETTING THE MACHINE.

ADJUSTMENT OF SPEED AND FEED.

41. Definition. — Under the general appellation of **setting the machine** is included the selection of a proper cutting speed and feed, and arranging the machine for them; setting the cutter or cutters for depth, sidewise, and for width of cut; and adjusting the automatic feed to trip at the required point.

42. Adjusting the Speed.—After a cutting feed and speed as directed by judgment have been selected, the driving belt and feed belt are placed on the proper steps of their respective cone pulleys. The determination of the proper step to use is a very simple matter when the number of revolutions that the milling-machine spindle makes with the driving belt on the different steps is known. This is found quickest by actually counting for 1 minute, using a revolution indicator for this purpose. Then, to find what number of revolutions corresponds to a given surface speed of the cutter, either refer to the tables given at the end of *Milling-Machine Work*, Part 1, or use the following rule:

Rule.—*Divide 12 times the cutting speed in feet per minute by the circumference of the cutter in inches.*

The correct number of revolutions having been found, place the belt on the step that will give the nearest number of revolutions.

EXAMPLE.—With the belt on the smallest step of the cone pulley, the spindle makes 305 revolutions; with the belt on the second step, it makes 178 revolutions; with the belt on the third step, 110 revolutions; and with the belt on the largest step, 68 revolutions. What step would be selected to give approximately a cutting speed of 80 feet per minute to a cutter 3½ inches in diameter?

SOLUTION.—The circumference of the cutter is $3\frac{1}{2} \times 3.1416 = 10.9956$, say 11 inches. Applying the rule, we get

$$\frac{12 \times 80}{11} = 87 \text{ revolutions, nearly.}$$

Using the largest step, the cutting speed will be lower than desired; using the third step it will be higher. Generally, it is desirable to start in with the lower speed and watch results; hence, most operators would place the belt on the largest step. Ans.

In actual practice, an experienced operator will rarely stop to calculate the proper number of revolutions; his past experience will tell him, as soon as he sees the material and the depth of cut to be taken, on what steps to place the driving belt and feed belt. A careful operator, no matter how extensive his experience has been, should make it a rule to verify the accuracy of his judgment occasionally by calculation.

43. Adjusting the Feed. — The arrangement of the feed mechanism differs so much in the various makes of milling machines that no specific rules for calculating the feed of the table per minute can be given. Nearly all modern milling machines use a screw for feeding the table; with all such machines, the feed per minute may be readily calculated by the following general rule:

Rule.—*Observe the number of revolutions that the spindle must make to produce one revolution of the feed-screw, and divide by it the product of the lead of the feed-screw and the revolutions of the spindle per minute.*

EXAMPLE.—In a certain make of machine, the spindle must make 2 revolutions to produce 1 revolution of the feed-screw. The lead of the feed-screw being $\frac{1}{4}$ inch, what is the feed per minute at 32 revolutions of the spindle?

SOLUTION.—Applying the rule just given, we get

$$\frac{\frac{1}{4} \times 32}{2} = 4 \text{ inches.} \quad \text{Ans.}$$

44. Construction of Feed Tables. — In practice it will, as a general rule, be found that the countershaft to which the machine is belted runs practically at a constant speed, so that the number of revolutions per minute of the spindle will remain constant for each speed; that is, if the spindle makes, say, 32 revolutions with the belt on the largest step, it can safely be assumed that it will make very

nearly that number of revolutions whenever the belt is placed on the largest step. This fact makes it possible to construct an exceedingly convenient table of feeds per minute at the different speeds with all the different changes of feed that are possible.

In the first place, observe how many revolutions of the spindle will be required for 1 revolution of the feed-screw with each change of feed; then apply the rule given in Art. **43** to each speed of spindle and feed-change combination that is possible, and tabulate the result for future reference.

45. Signs of Excessive Speed and Feed. — After the machine is started, watch the cutter to see that the speed is suitable, and watch the driving belt and feed belt to determine an excessive feed. Too high a cutting speed will manifest itself by a rapid dulling of the cutting edges and, subsequently, a peculiar squeaking sound; an excessive feed results in a slipping of the driving belt or the feed belt, or both, and causes a shrill squeak to emanate from the belt. In extreme cases, one or both of the belts may run off the pulley.

SETTING THE CUTTER.

46. Setting for Depth. — The machine can be adjusted to the correct depth of cut in two ways, which are by *trial* and by *measurement*. In an adjustment by trial, the cutter is set to about the correct depth and a cut is taken. According to circumstances, either the depth of the cut or the machined work is then gauged by gauges of suitable form, and the setting and taking of a cut is repeated until the work fits the gauge. The gauging device may be any suitable measuring instrument or a special gauge made for the purpose; duplicate work is milled almost entirely to limit gauges. When the work has rather an intricate form, setting the machine by trial is, as a general rule, the only method that can be employed, although in isolated cases it may be possible to use the direct-measurement method.

47. When about to set a cutter for depth by measurement, the machine may be started and the work and cutter carefully brought together until the cutter very lightly touches the work. Then, by observing the indication of the graduated dials reading to $\frac{1}{1000}$ inch, with which the feed-screws of the better kind of milling machines are supplied, and which transform these screws into micrometer screws, the work and cutter are brought together an amount equal to the depth of cut required.

The reading of the dial is taken when the cutter is just touching the surface of the work; the required depth of cut is then added to, or subtracted from, this reading and the machine is set to the calculated new reading. It will be understood that before the depth of cut is adjusted, the work is run clear of the cutter. The micrometer graduations are, also, very useful for adjustment by gauging, since they allow the depth of cut to be increased by a definite amount. For instance, if the measurement of a piece of work shows it to be $\frac{7}{1000}$ inch too thick, the graduations allow the work to be raised, or the cutter to be lowered, by just that amount. Care must be taken to see that all the lost motion in the feed mechanism is taken up before bringing the work in contact with the cutter.

48. In many cases, in setting the machine for depth of cut, it is not possible to measure from the surface to be machined, owing to its being rough and uneven. In most cases there is some finished surface parallel to the proposed cut in contact either with the bottom of the vise, or the surface of the milling machine, or of an angle plate, or of some special fixture from which measurements can be taken to the cutter. Then, the cutter may be set for depth by testing with a scale, or with a surface gauge, or a height gauge, or some similar convenient device, measuring from the finished surface.

49. Fig. 18 shows how a surface gauge may be used for testing the setting of the cutter. In this case, a face cutter is employed: the problem is to set it so that the work *a*,

when finished, will be a certain height. The pointer *p* of the surface gauge may be set by the aid of a steel rule to the given height above the surface of the milling-machine table, and then used for testing the height of the cutter. To do this, the cutter should be placed in such a position that a

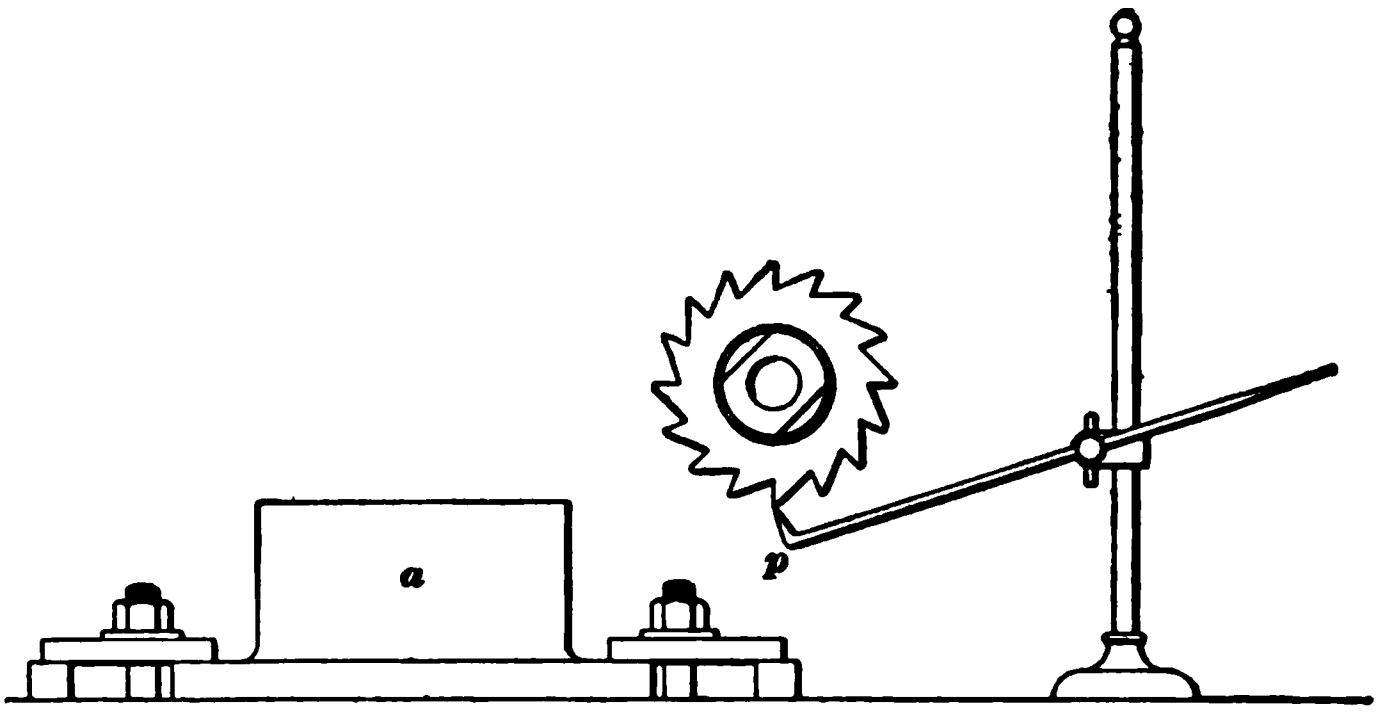

FIG. 18.

line drawn through one of its cutting edges and the center of the cutter is at right angles to the surface of the table. Now place the pointer of the gauge beneath the cutting edge selected, and raise the table, or lower the cutter, until the cutting edge and the pointer touch. The cutter is then set correctly.

50. When a surface gauge is not available, and a steel rule cannot be used by reason of the interference of the arbor, a pair of inside calipers may be set to the given height and used for testing. Owing to the difficulty of holding them exactly at right angles to the surface measured from, calipering cannot be recommended as a particularly accurate method of testing. On the other hand, it is convenient.

51. The special surface gauge shown in Fig. 19 (*a*) will be found of advantage for machines that have no graduated dials, and when a cutter is to be set for a given depth of cut. The surface gauge differs from the ordinary one in that it carries two heads and pointers. In use, the pointer *p* is set to touch the surface of the work; the pointer *q* is now

adjusted until the distance between it and the pointer *p* is equal to the required depth of cut, when *p* is swung up out of the way and *q* is used for testing the setting of the cutter, as shown in Fig. 19 (*b*).

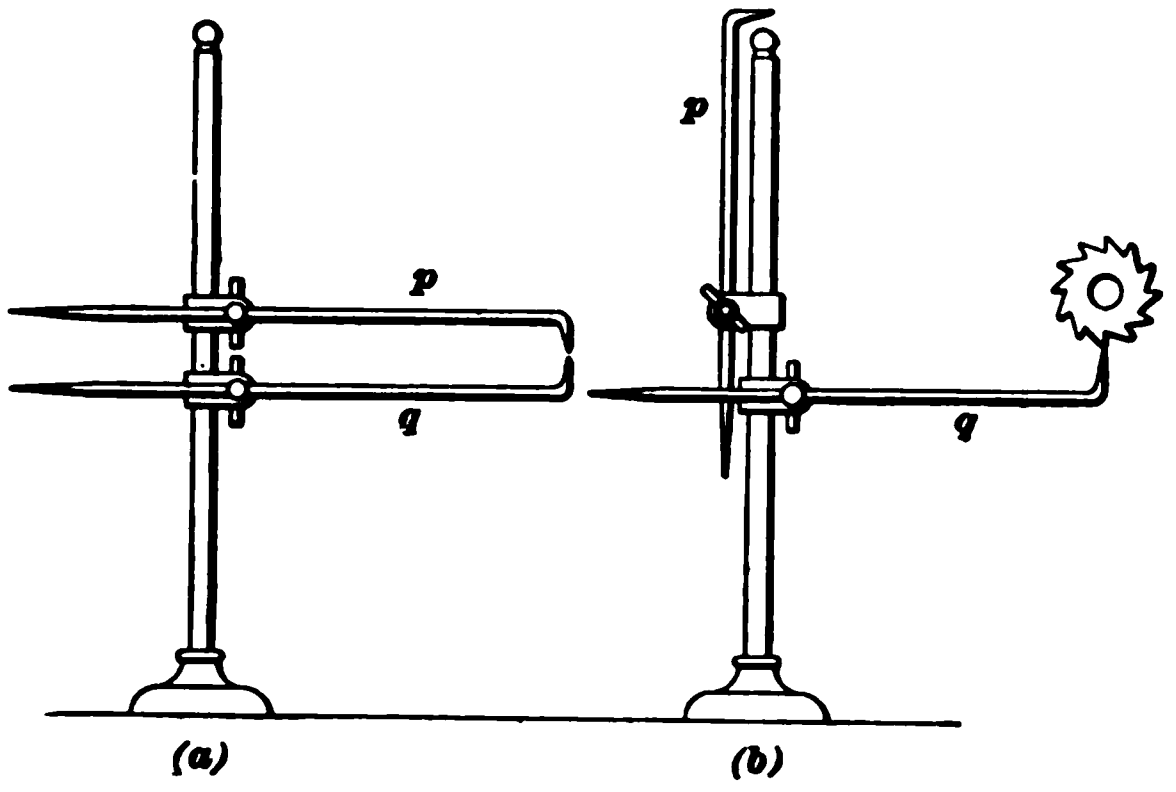

FIG. 19.

52. A careful operator will always gauge the setting of the cutter as soon as it cuts the full depth for which it is set, in order to make sure of the setting. Whenever this is done, it is advisable to stop the machine to prevent any accident during gauging.

53. In work done between index centers, it often occurs that the bottom of the cut must be at an exact distance from the axis of the work. In this case, the cutter may first be set to touch the work, and then set to a depth equal to the difference between the radius of the work and the required distance from the center.

54. In some instances, a little calculation will be required in order to obtain the correct distance from the axis from which to compute the correct depth of cut. For instance, assume that a gear is to be cut with a cutter that requires to be sunk in to a depth of .27 inch when the diameter of the gear blank is exactly 5.25 inches. On measuring the gear blank, it is found to be only 5.23 inches; it is required to find the depth to which the cutter is to be set in order to

preserve the correct distance of the bottom of the cut from the axis. The correct distance, evidently, is $\frac{5.25}{2} - .27 = 2.355$ inches. The radius of the actual gear blank is $\frac{5.23}{2} = 2.615$ inches. Then, the depth of the cut for which the machine is to be set is $2.615 - 2.355 = .26$ inch.

55. Setting the Cutter Sidewise. — In setting a cutter sidewise, several cases occur in practice, the most common of which are: the cutter is wider than the work, and the cut is to be taken over the whole surface; the cutting is to be done to a shoulder in a plane at right angles to the axis of rotation of the cutter; and the cutter is to be set centrally to a vertical or horizontal plane passing through the index centers or index-head spindle.

Considering the first case mentioned, the cutter can in nearly all cases be set sidewise by eye alone, and, hence, no special directions are required. Taking up the second case, the cutter may be set correctly by trial (this chiefly occurs in duplicate work of intricate shape) or by measurement. As a general rule, the distance of the shoulder from some edge of the work is either accurately or approximately known, and the cutter can be quite accurately set by measurement, gauging after the cut has been taken. In setting by measurement, a steel rule may be applied as shown in Fig. 20, where the dotted lines show the depth and location of the cut to be taken over the work *a*.

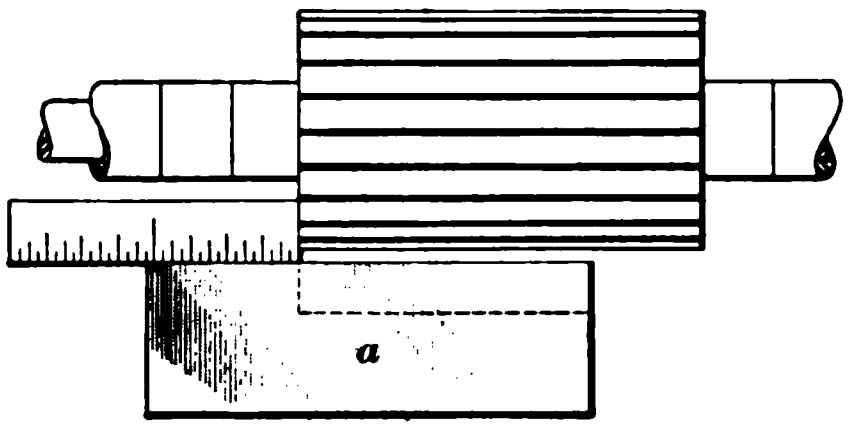

FIG. 20.

56. Setting the Cutter Central and Off Center. A cutter may be set central, in respect to work held between centers, in several ways. A very simple way often used in horizontal machines is shown in Fig. 21; the accuracy of

the setting attainable by this method depends, primarily, on the vertical line of motion of the work or cutter being exactly at right angles to the surface of the milling-machine table.

The work is placed between the centers or in the chuck, and a try square *c* is then set on the table with its blade in contact with the work. In the case of a symmetrical cutter, as a gear cutter or double-angle cutter with equal angles, the distance *a* is then measured. The try square is next placed on the other side of the work, into the position shown in dotted lines, and the distance *a'* is measured. The difference in the measurements *a* and *a'* shows which way the cutter or work is to be moved; the amount that it is to be moved is equal to half the difference. In the case of cutters that are not symmetrical, there is always some well-defined edge that is to be set central; in such a case, the measurement *b* is taken and compared with *b'*. If the table is arranged to swivel, it should be set to zero before setting the cutter.

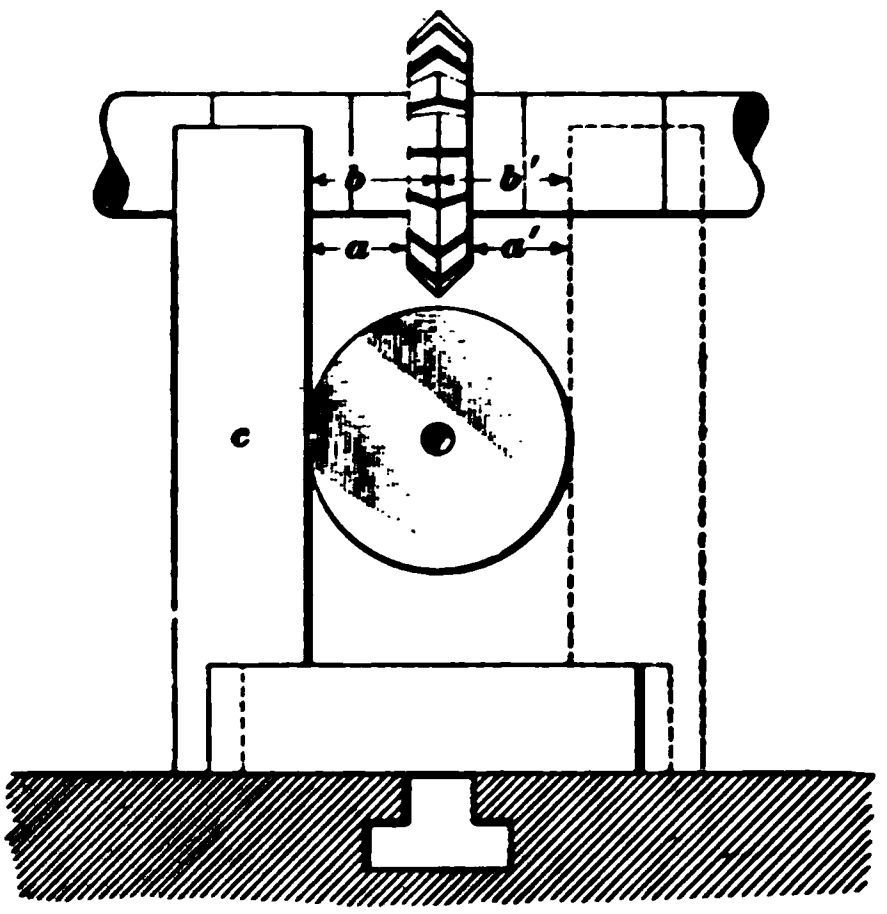

FIG. 21.

57. Double-angle cutters with unequal angles often require to be set a given amount off center. To do this, set the cutter central and then move the work or the cutter sidewise by the amount required, using either a steel rule and measuring from the blade of a try square or the graduated feed-screw dial, if one is available.

58. A rough-and-ready way of testing the central setting of a cutter in a horizontal machine is to test by means

of one of the index centers. The table having been set to zero, i. e., so that the line of motion is at right angles to the axis of rotation of the cutter, the knee is raised until the center used for testing is about on the same level as the cutter. The milling-machine table is now shifted until the part of the cutter that is required to be central is in the vertical plane of the index centers, as near as can be judged by eye. While this method of setting is not the most accurate one that can be devised, it will be sufficiently accurate for the greater part of the work that is to be done.

59. Another fairly accurate way of testing the setting is shown in Fig. 22, which is a top view. The work *a* is placed between the centers and the cutter and work are brought together until they touch slightly. The cutter, while revolving, is then fed across the work, or *vice versa*, in the direction of the axis of the cutter, thus cutting out a small elliptical spot *b*. The cutter is now set central with this spot by eye. If the work runs very true, this method is as accurate as the one previously described.

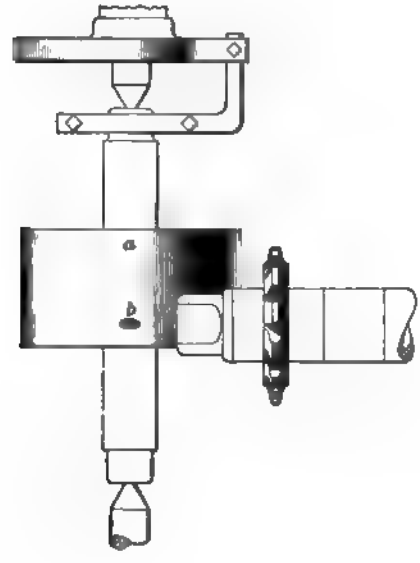

FIG 22.

60. One of the most accurate methods of testing the central setting of a cutter for work held in the chuck, and, also, for work held between centers that are properly in line, is shown in Fig. 23. Any suitable piece of metal is held in the chuck and a cut taken across the face of it, as the cut *a*, Fig. 23. The testing piece is then revolved exactly one-half a revolution and another cut taken

without having disturbed the setting of the cutter. Then if the last cut does not exactly coincide with the first, it shows the cutter to be off center; in extreme cases, two distinct grooves, as *a* and *a'*, may be cut.

61. When an end mill is to be set central to work held between centers, either in a horizontal or a vertical machine, the problem, in reality, is to make the axis of rotation of the work and cutter intersect. The machine may be set correctly by placing a true-running milling-machine arbor *a*

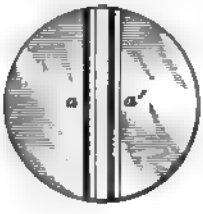

FIG. 23.

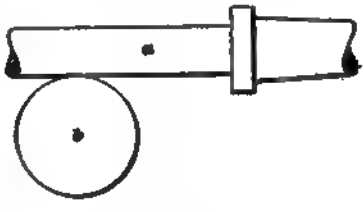

FIG. 24.

in contact either with the work *b* or with a true-running mandrel placed between the centers, as shown in Fig. 24, using a piece of thin tissue paper as a feeling piece. Remove the arbor and then shift the table or the spindle an amount equal to the sum of the radii of the work, or mandrel, and the arbor.

If this method of setting is used in a horizontal machine, the centers must be parallel to the line of motion in a horizontal plane. For a vertical machine, the centers must be in a vertical plane parallel to the line of motion. When the work is conical, it is recommended to substitute a cylindrical mandrel for it when setting the machine.

62. In vertical machines, the central setting of an end mill may also be tested by placing a try square on the table with its blade against the work, using it to measure from to the cutter and then placing it on the opposite side of the work and repeating the measurement.

63. In a vertical machine, any cutter placed on an arbor when applied to work held between the centers, is, as

a general rule, applied on the side. The central setting of such a cutter may be tested by taking cuts across the face of a piece held in the chuck, as was explained in conjunction with Fig. 23, Art. **60.** Another method is to line the cutter by one of the centers, just as is done in a horizontal milling machine. A third and very convenient method is to measure the height of the index centers above the milling-machine table while they are in a horizontal plane parallel to the line of motion. A graduated square, or a try square with a steel rule held against it, may then be applied directly to the cutter.

64. Adjusting Straddle Mills for Width. — The distance between the sides of a pair of straddle mills is adjusted by means of washers. Where rather delicate adjustment for width is required, paper washers of different thickness may be used to good advantage. Good thicknesses to have handy are .001 inch (very thin tissue paper); .002 inch (fine writing paper); .004 inch (heavy writing paper); and .008 inch (medium heavy manila wrapping paper). In addition, sheet-brass or sheet-steel washers .016 inch and .032 inch thick will be found convenient. In some shops, sheet-steel washers are used exclusively; thin sheet steel rolled very exactly to size may now be obtained in thicknesses from .002 inch up. The final adjustment for width of cut for straddle mills must be made by trial whenever the limit of variation is very small; that is, after setting the cutters as accurately as possible, a cut is taken and the width measured. The distance between the cutters is then adjusted in the direction indicated by the measurement.

65. Arranging Gang Mills.—In assembling a gang of mills on an arbor, it is advisable to place them in such relation to one another that adjacent cutting edges will not lie in the same plane. If so placed, the width of the cut will not be excessive, and the effect will be almost the same as that of a cutter with helical cutting edges; that is, the intensity of the shock due to a cutting edge engaging the work is greatly reduced.

ADJUSTING THE AUTOMATIC FEED.

66. On all modern machines that are provided with an automatic feed, a tappet is fitted that may be adjusted to *trip* (stop) the feed at any place within the range of motion of the table. The easiest way of finding the correct position of the tappet is to run the table into a position where the cutter just clears the work. The machine standing still, the feed is tripped by hand by pushing over the part engaged by the tappet; the latter is then brought against the part mentioned and locked to the table.

SPECIAL USES OF THE MILLING MACHINE.

67. Special Operations.—In addition to its legitimate function, many designs of milling machines may be used occasionally for other work, such as drilling, boring, turning, and graduating. In some cases, the milling machine may be used to advantage for these special operations; as a general rule, however, it will be more economical to use a machine primarily built for the purpose. Thus, while it is possible to do quite a variety of turning in some milling machines, even at the best such a machine will only be a makeshift for a lathe.

68. Drilling.—The kind of drilling for which a milling machine can be used to advantage is index drilling; that is, the drilling of holes properly spaced by the aid of the index head. The work is then mounted on the face plate, or held in the chuck, or attached in some other suitable manner to the index head, which is placed so that the axis of its spindle is in the same plane as the milling-machine spindle. The drill used is held in a chuck attached to the milling-machine spindle; it should project as little from the chuck as circumstances permit. In some cases, it is possible to utilize the outboard bearing for steadying a long drill by placing a steadying bushing that closely fits the drill into the bearing and adjusting the latter so that it will be close to the work.

69. When accurate spacing is required, the drill should be followed by a reamer made in the general form of a chucking reamer, but with about twice the clearance in order to prevent it, as much as possible, from following a hole that has been drilled out of line.

70. The feeding, in drilling, is done by moving the table, and, hence, the attached work toward the drill. When all the holes are to be drilled to the same depth, the stop may be used, if one is provided; otherwise, the graduated dial may be employed to indicate when the correct depth has been reached.

71. In making drill jigs, the milling machine may occasionally be used to advantage for spacing the holes correctly, using the graduated dials to indicate the spacing. The accuracy within which the holes will then be located will depend primarily on the accuracy of lead of the different feed-screws, and, also, on the skill used in reaming or boring the holes.

72. Boring.—A cored or drilled hole may be finished by boring with a regular boring bar and cutter, using the outboard bearing for supporting the bar, in case it is rather long. The methods of holding the work and lining it up, and, also, of taking the cut, are exactly the same as are used in a regular boring machine, except that, as a general rule, the feeding will have to be done by hand, since very few milling machines have an automatic feed in the direction of the spindle.

In machines in which the table can be swiveled so that its line of motion will be in the same plane as the axis of the milling-machine spindle, quite a long hole can be finished by boring, and, in that case, the regular automatic feed can generally be used.

73. Turning.—Once in a while, a job will turn up that makes it desirable to turn some part of it in the milling machine. In that case, the turning tool is held in the vise

and the work is attached to the milling-machine spindle; the machine is then used as if it were a lathe.

74. Graduating.—A universal milling machine having graduated dials reading to $\frac{1}{1000}$ inch can be used for a good many jobs of graduating, either on straight or curved surfaces.

For graduating straight surfaces, as rules, for instance, the divisions are obtained by means of the feed-screws, and the length of the graduation lines by means of one of the other feed-screws at right angles to the first. A good way of procedure is to cut all the longest graduation lines first, using a stop to insure that all are of the same length; then cut the next shorter lines, and so on.

75. There are two general methods of marking graduation lines on work, which are the cutting method and the squeezing method. For cutting coarse graduations, a double-angle cutter may be employed; for fine graduation lines a single-pointed tool is clamped to the spindle and used as a planer tool, traversing the work beneath it. The spindle, in that case, is prevented from turning by blocking it in any suitable manner. The objection to cutting graduation lines by planing is that the cut is comparatively rough on account of the rapid dulling of the tool that is induced by the dragging of the cutting point during what may be called the return stroke. This dragging can be overcome by placing the tool into a clapper as used on a planer; this allows the tool point to swing away from the work, thus preserving the point longer.

In regular dividing engines, a diamond is generally used for cutting graduation lines; in that case, there will be no perceptible wear of the tool point with any reasonable use, and very fine graduation lines can be cut.

76. For the ordinary graduating work that a machinist is likely to be called upon to do, it is believed that the most satisfactory results can be obtained by the squeezing method.

Fig. 25 shows a good form of tool for this purpose. It consists of a holder *a* bored to fit the arbor of the milling-machine spindle. The sides of the holder are faced parallel with each other and square with the hole; the end is forked and carries the sharp-edged hardened marking wheel *b*, which is free to turn on a pin, but is confined sidewise by the forks of the holder. The marking wheel should be ground perfectly true after hardening; the angle included between the two faces may vary from 60° to 90°. With the smaller angle, finer graduation lines can be obtained; a wheel with the larger angle will last longer, however.

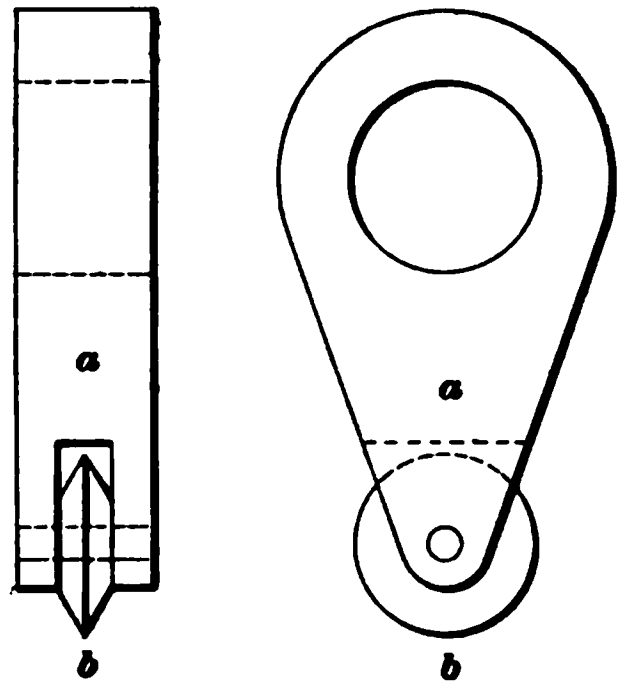

FIG. 25.

77. In use, the holder is clamped to the arbor as if it were a cutter and the spindle is then blocked. The work having been adjusted so that the surface to be graduated is slightly above the edge of the wheel, it is traversed beneath the latter, which rolls or squeezes in a graduation line that has slightly raised edges, which may be removed afterwards by grinding or filing. Fig. 26 is a greatly enlarged cross-section of a graduation line formed by squeezing, and shows the raising up of the edges. It may be said in favor of this method of graduating that the lines will be smooth, and that a tool will last a very long time with reasonable use.

FIG. 26.

78. The index head affords a ready means of dividing circular dials of various kinds into even divisions. The stop to the table, if one is fitted, may be used for regulating the length of the graduation lines; when no stop is available, the reading of the dial on the feed-screw will indicate where to stop feeding in order to make all lines of each set equal in length.

COMPARISON OF MILLING MACHINES.

79. The universal milling machine is essentially a tool-room machine by reason of the large variety of work that may be done on it with the aid of the attachments provided for the purpose. While manufacturing, i. e., milling duplicate work in large quantities, can be done in a universal machine, a heavy, plain, horizontal machine is generally preferable for this work by reason of its lower cost and greater rigidity. It is not to be inferred from this statement that a universal machine is not or cannot be made rigid; the fact of the matter is that the universal machine, not being intended for the heavier class of milling, is not given the same amount and distribution of metal that is put into a machine especially built for heavy plain milling.

80. The vertical type of machine is to be selected for work that is to be largely done by end mills or side mills; the cut being in plain sight of the operator is probably the most valuable feature of the vertical machine.

81. The Lincoln type of machine was developed in armories, and is especially adapted for milling large quantities of relatively small duplicate work requiring comparatively short cuts.

82. The rotary planer is well adapted for long work that requires the ends to be squared up, and is much used for milling the ends of cast-iron columns and of the different rolled sections used in bridge work and structural ironwork. It is also much used for surfacing plane surfaces on heavy work; for instance, facing up the segments of built-up fly-wheels. Its primary function is the production of plane surfaces at right angles to the surface of the table, and it cannot be claimed to be adapted for any other work.

83. The planer type of milling machine is intended for long and heavy cuts with face mills, such as the milling of connecting-rods and side rods for locomotives, the milling of rather wide plane surfaces, beds for machine tools, and

similar work. When supplied with index centers, a great deal of the work done in any other horizontal machine can be done in it, such as the cutting of gears of various kinds, fluting reamers, etc.

84. Multispindle machines are best adapted for work having a number of surfaces so situated in respect to one another that several of them can be operated on simultaneously. They are used considerably for heavy work, and then take the place of a planer with a number of heads; in fact, they are intended for the same class of work.

GEAR-CUTTING.

(PART 1.)

GEARING.

TEETH OF SPUR GEARS.

DEFINITIONS.

1. A **gear-wheel,** or **gear,** may be defined as a machine element provided with projections called **teeth,** these teeth being so formed that they will transmit a definite motion to another element of the machine by engaging with similar projections on it. When the projections on a pair of gears engage each other, the gears, or their teeth, are said to be **in mesh.**

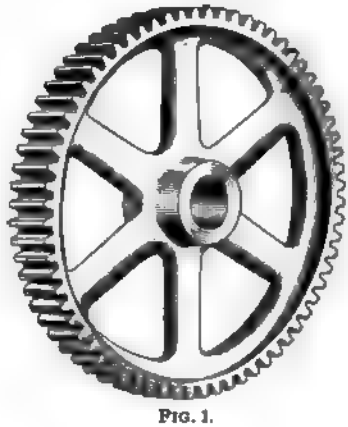

FIG. 1.

2. The **spur gear,** Fig. 1, is the simplest and most familiar type of gear, and the principles involved in the formation of its teeth apply, with certain minor modifications, to the formation of the teeth of nearly every type

Copyright, 1901, by THE COLLIERY ENGINEER COMPANY.
Entered at Stationers' Hall, London.
All rights reserved.

of gear in common use; therefore, a study of the subject of gear-teeth can best be begun by a study of the formation of the teeth of the spur gear.

ROLLING CYLINDERS.

3. Let two wheels with parallel axes be held in firm rolling contact by pressure upon their axes, as in Fig. 2. If one wheel be turned in either direction, and there is no slipping, the other wheel will rotate in the opposite direction with a circumferential, or surface, velocity equal to that of

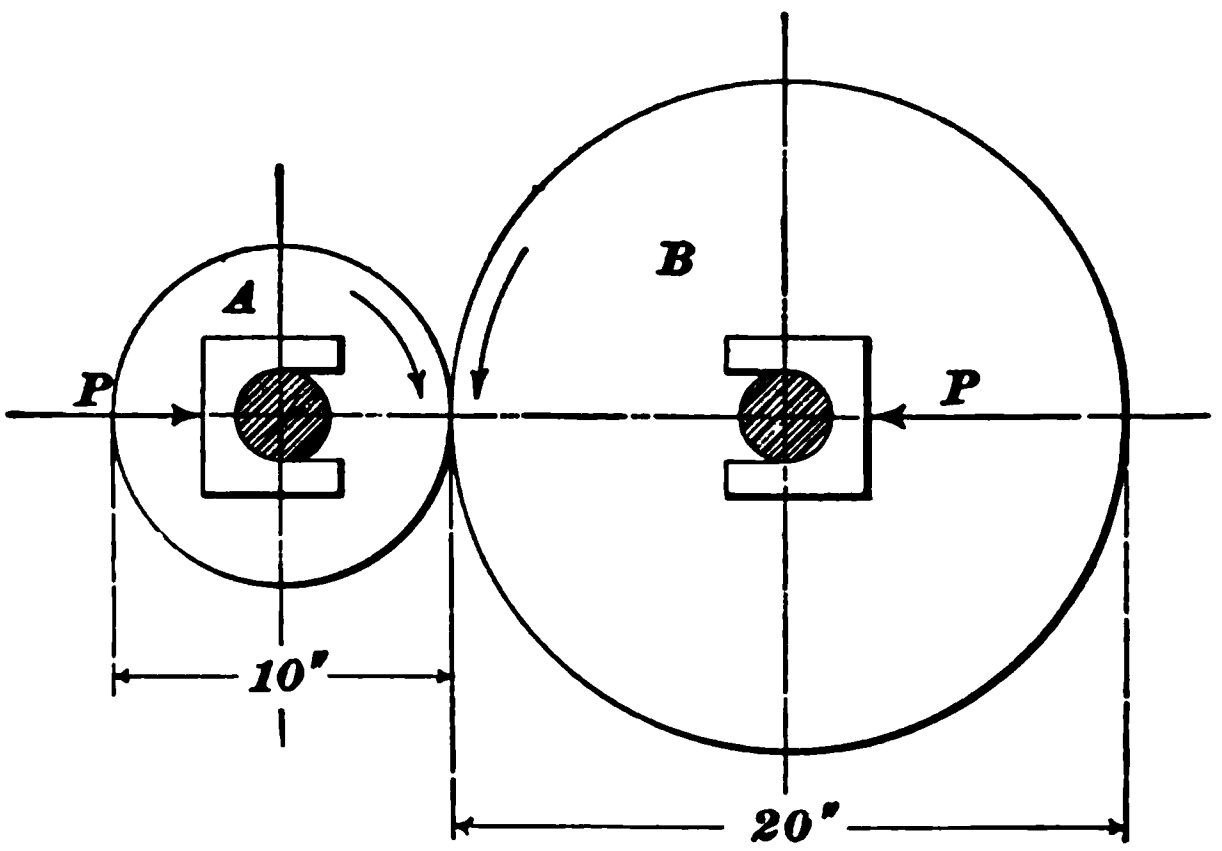

FIG. 2.

the first; the relative motion will be the same as if the wheels were connected with a crossed belt, and the numbers of their revolutions will be inversely proportional to their diameters. Assuming wheel A to be 10 inches in diameter and B 20 inches, B will make $\frac{10}{20} = \frac{1}{2}$ as many revolutions as A.

PURPOSE OF THE TEETH.

4. Should slipping occur, B would make less than one-half as many revolutions as A, assuming A to be the driver. In order that this slipping may be prevented, suppose that

pieces like *a*, *a*, Fig. 3, are fastened at equal distances on the peripheries of *A* and *B*, and that corresponding grooves

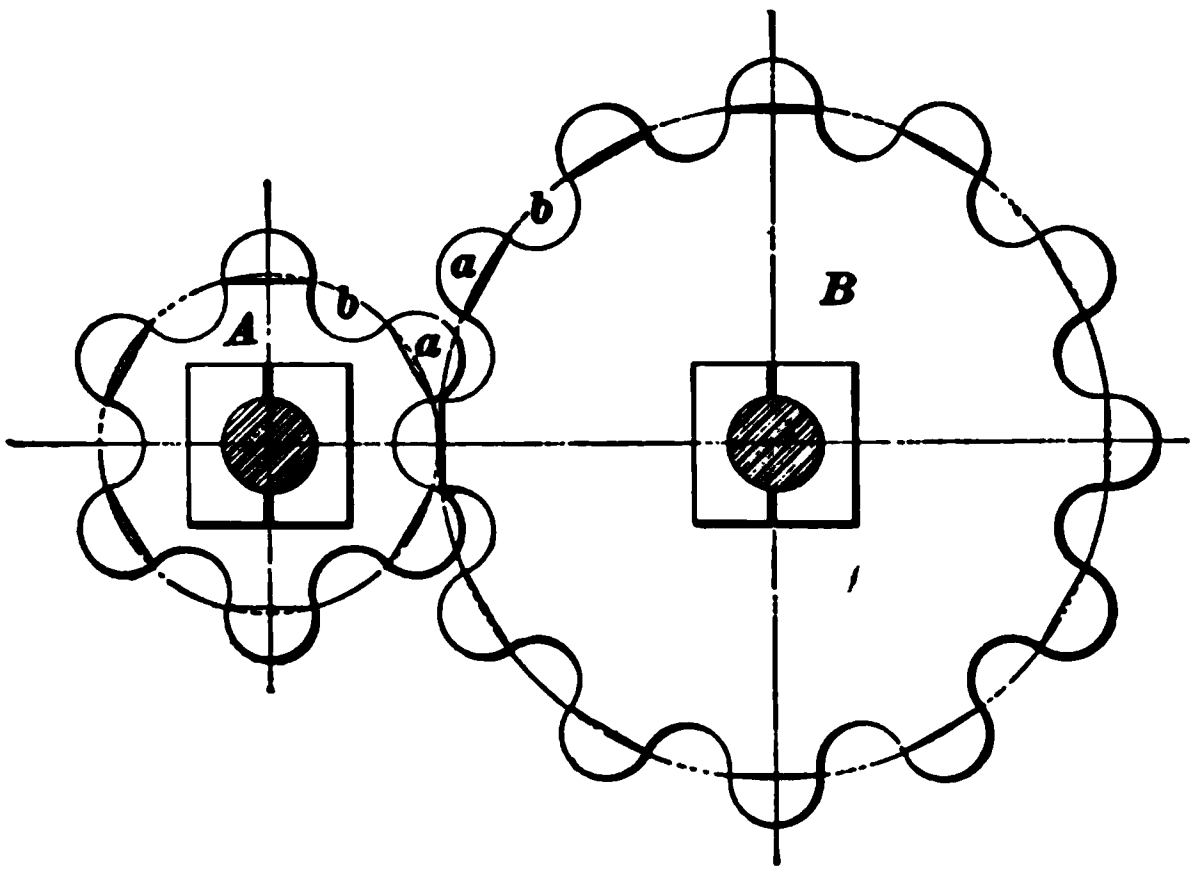

FIG. 3.

like *b*, *b* are cut. Then, the projections, or teeth, on one wheel will run between the teeth on the other, and *B* will necessarily revolve one-half as often as *A*.

IMPORTANCE OF FORMS OF TEETH.

5. Although the *number of revolutions* of wheels having teeth, like those shown in Fig. 3, will have the ratio as the diameters of the cylinders, it does not necessarily follow that the relative motion will be uniform during the period of time in which one tooth of the driver acts on a tooth of the driven wheel. In order to secure a relative motion of the two wheels that will be exactly similar to that of two cylinders rolling on each other without slipping, it is not sufficient merely to provide the wheels with teeth, but these teeth must have certain definite forms. If this condition is not fulfilled, the motion of the driven wheel will be irregular or jerky, causing shocks and noise. This uneven motion is undesirable, even though the variation be very slight. The

object, then, in designing the teeth of gear-wheels should be to so shape them that the motion transmitted will be exactly the same as with a corresponding pair of wheels, or cylinders, that are without teeth, and that are running in contact with each other without slipping.

6. The **pitch cylinders** of a pair of gears are those imaginary cylinders that, when rolled together without slipping, will have the same relative motions as the gears themselves.

7. The **pitch circle** of a gear (see Fig. 4) is the circle that represents the pitch cylinder on a drawing of the gear.

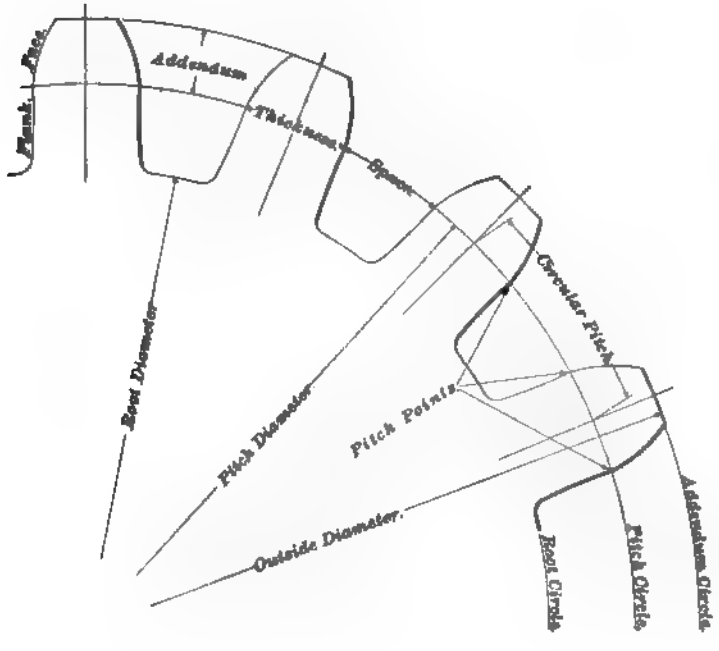

FIG 4.

The **pitch point** of a tooth curve is the point where the outline of the tooth intersects the pitch-circle.

8. The **pitch diameter** is the diameter of the pitch circle. When the word "diameter" is applied to gears, it is always understood to mean the *pitch diameter*, unless otherwise specially stated, as "outside diameter" or "diameter at the root."

PITCH AND PROPORTIONS OF TEETH.

CIRCULAR PITCH.

9. The distance from a point on one tooth to the corresponding point on the next tooth, *measured along the pitch circle*, is called the **circular pitch.** The circular pitch of a gear is obtained by dividing the length of the circumference of the pitch circle by the number of teeth.

CIRCULAR PITCH AND PITCH DIAMETER.

10. The pitch diameter of a gear is generally some whole number of inches, or a whole number plus some simple fraction, like $\frac{7}{8}$, $\frac{3}{4}$, $\frac{1}{2}$, or $\frac{1}{4}$. Since the length of the circumference of the pitch circle is equal to the product of the pitch diameter and 3.1416, it follows that the pitch circle can seldom be divided into equal parts whose lengths will be expressed in the form of whole inches and the simple fractions into which scales and rules are most commonly divided.

DIAMETRAL PITCH.

11. On account of the inconvenient form of the fractions in which circular pitch must generally be expressed, it is little used for cut gears, the *diametral-pitch* system described in the following article having taken its place.

12. The **diametral pitch** is not a measurement like the circular pitch, but a *ratio*. *It is the ratio of the number of teeth in the gear to the number of inches in the pitch diameter; or, it is the number of teeth on the circumference of the gear for 1 inch diameter of the pitch circle.* It is obtained by dividing the number of teeth by the pitch diameter.

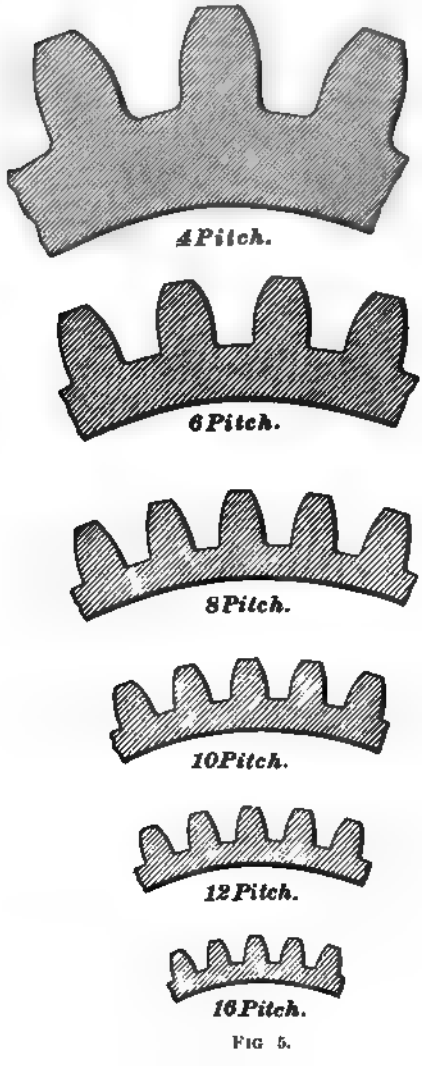

FIG 5.

A gear, for example, has 60 teeth and is 10 inches in diameter. The diametral pitch is the ratio of 60 to 10 = $\frac{60}{10}$ = 6, and the gear would be called a 6-pitch gear. From the definition, it follows that teeth of any particular diametral pitch are of the same size, and have the same width on the pitch line, whatever the diameter of the gear. Thus, if a 12-inch gear had 48 teeth, it would be 4 pitch. A 24-inch gear to have teeth of the same size would have twice 48 or 96 teeth, and $96 \div 24 = 4$, the same diametral pitch as before. Fig. 5 shows the sizes of teeth of various diametral pitches.

Diametral pitch has also been defined as the number of

teeth in a gear of 1 inch diameter, which amounts to the same as the above definitions.

Using, for illustration, a wheel 10 inches in diameter with 60 teeth, we have

$$\text{Circular pitch} = \frac{\text{circumference}}{\text{No. of teeth}} = \frac{10 \times 3.1416}{60} = .524 \text{ inch.}$$

$$\text{Diametral pitch} = \frac{\text{No. of teeth}}{\text{diameter}} = \frac{60}{10} = 6.$$

OTHER DEFINITIONS.

13. The other necessary definitions applying to the parts of a gear can be readily understood from Fig. 4. The thickness of the tooth and width of the space are measured on the pitch circle. A tooth is composed of two parts, the **addendum,** or part outside the pitch circle, and the part inside, which is called either the **root** or the **dedendum.**

A line through the outside end of the addendum is called the **addendum circle,** or **addendum line,** and one through the inside part of the root is called the **root circle,** or **root line.** The difference between the width of the space and the thickness of the tooth is called the **back lash.** The **clearance** is the distance between the working depth of the tooth and the root circle, or the amount which the dedendum exceeds the addendum.

PROPORTIONS FOR GEAR-TEETH.

14. With gears of large size, and often with cast gears of all sizes, the circular-pitch system is used. In these cases, it is usual to have the addendum, the whole depth, and the thickness of the tooth conform to arbitrary rules based on the circular pitch. None of these rules can be considered absolute, however. Machine-molded gears require

less clearance and back lash than do the hand-molded, and very large gears should have less clearance and back lash, proportionately, than smaller ones. The following table of proportions that have been used successfully will serve as an aid in deciding upon suitable dimensions. Column 1 is for ordinary cast gears, and column 2 is for very large gears having cut teeth. *C* stands for circular pitch.

TABLE I.

GEAR-TOOTH PROPORTIONS.

	1	2
Addendum	0.30 *C*	0.30 *C*
Root	0.40 *C*	0.35 *C*
Whole Depth	0.70 *C*	0.65 *C*
Thickness of Tooth	0.48 *C*	0.495 *C*
Width of Space	0.52 *C*	0.505 *C*

15. The gears most often met with are the cut gears of small and medium size, like those, for example, on machine tools, which are almost invariably diametral-pitch gears. The teeth are cut from the solid by standard milling cutters that have been proportioned with the diametral pitch as a basis. This system is also coming into very general use for cast gearing. *In all diametral-pitch gears, the addendum is made equal to 1 divided by the diametral pitch; and the working depth twice the addendum.* The end clearance is made equal to .125 of the addendum for cut gears by The Pratt & Whitney Company; the Brown & Sharpe Manufacturing Company use .1 of the thickness of the tooth on the pitch line as the clearance. The side clearance, or back lash, is made just enough to give a good working fit, and seldom exceeds .02 of the circular pitch.

Using The Pratt & Whitney Company's proportions, a

4-pitch gear would have the addendum $= 1 \div 4$, or .25 inch; the working depth would be $2 \times .25 = .5$ inch, and the clearance $.125 \times .25 = .031$ inch. The total height of the tooth would be $.5 + .031 = .531$ inch. The thickness of the tooth would be .5 the circular pitch, nearly.

RULES FOR SPUR-GEAR CALCULATIONS.

RELATION BETWEEN CIRCULAR PITCH AND DIAMETRAL PITCH.

16. The product of the circular pitch of a gear and the diametral pitch is always the constant number 3.1416. Hence the following rules:

Rule.—*To change circular pitch to diametral pitch, divide 3.1416 by the circular pitch.*

EXAMPLE.—If the circular pitch is .3927 inch, what is the diametral pitch?

SOLUTION.—Applying the rule just given, the diametral pitch is

$$\frac{3.1416}{.3927} = 8. \quad \text{Ans.}$$

17. Rule.—*To change diametral pitch to circular pitch, divide 3.1416 by the diametral pitch.*

EXAMPLE.—If the diametral pitch is 4, what is the circular pitch?

SOLUTION.—Applying the above rule, the circular pitch is

$$\frac{3.1416}{4} = .7854 \text{ in.} \quad \text{Ans.}$$

PITCH DIAMETER, NUMBER OF TEETH, AND DIAMETRAL PITCH.

18. Rule.—*To find the number of teeth when the pitch diameter and the diametral pitch are known, multiply the pitch diameter by the diametral pitch.*

EXAMPLE.—If a wheel is 30 inches in diameter and 3 pitch, how many teeth has it?

SOLUTION.—Applying the rule just given, the number of teeth is

$$30 \times 3 = 90. \quad \text{Ans.}$$

19. Rule.—*To find the pitch diameter when the number of teeth and the diametral pitch are known, divide the number of teeth by the pitch.*

EXAMPLE.—What is the pitch diameter of a $2\frac{1}{2}$-pitch gear having 20 teeth?

SOLUTION.—By applying the rule just given, we find the diameter to be

$$\frac{20}{2\frac{1}{2}} = 8 \text{ in.} \quad \text{Ans.}$$

OUTSIDE DIAMETER.

20. The diameter to which the blank for a spur gear should be turned is equal to the outside diameter of the gear. By reference to Fig. 4, it is seen that the outside diameter, and, hence, the diameter of the blank, is equal to the pitch diameter plus twice the addendum.

21. With the diametral-pitch system, in which the addendum is equal to 1 divided by the pitch, the outside diameter may be calculated from the pitch diameter and the pitch by an application of the following rule:

Rule.—*To find the outside diameter or the diameter of the blank when the pitch diameter and the diametral pitch are known, divide 1 by the pitch, multiply the quotient by 2, and add the product to the pitch diameter.*

EXAMPLE.—What should be the diameter of a gear blank for a 6-pitch gear, when the pitch diameter is 14 inches?

SOLUTION.—Applying the rule just given, the diameter of the blank is found to be

$$\frac{1}{6} \times 2 + 14 = 14.33 \text{ in.} \quad \text{Ans.}$$

22. Since the pitch diameter is equal to the number of teeth divided by the diametral pitch, and the addendum is

equal to 1 divided by the diametral pitch, the sum of the pitch diameter plus twice the addendum, or the outside diameter of the gear, may be calculated by an application of the following rule:

Rule.—*To find the outside diameter, or the diameter of the blank, when the diametral pitch and the number of teeth are known, add 2 to the number of teeth and divide the sum by the pitch.*

EXAMPLE.—A wheel is to have 48 teeth, 6 pitch; to what diameter must the blank be turned?

SOLUTION.—By the rule just given, the outside diameter is

$$\frac{48 + 2}{6} = 8.333 \text{ in.} \quad \text{Ans.}$$

23. The diameter of the blank and the pitch being given, the number of teeth may be calculated from the following rule:

Rule.—*To find the number of teeth when the outside diameter of the blank and the diametral pitch are known, multiply the outside diameter by the pitch and subtract 2 from the product.*

EXAMPLE.—A gear blank measures $10\frac{1}{4}$ inches in diameter and is to be cut 4 pitch. How many teeth should the gear-cutter be set to space?

SOLUTION.—By applying the rule just given, we find the number of teeth to be

$$10\tfrac{1}{4} \times 4 - 2 = 42 - 2 = 40 \text{ teeth.} \quad \text{Ans.}$$

24. Rule.—*To find the diametral pitch when the outside diameter and the number of teeth of a diametral-pitch gear are known, add 2 to the number of teeth and divide the sum by the outside diameter.*

EXAMPLE.—It is required to select a cutter for a gear having 54 teeth that is to mesh with the change gears of a lathe. One of the change gears, which has 64 teeth, measures 6.6 inches, outside diameter; for what pitch should the cutter be selected?

EXAMPLE.—At how many revolutions per minute will a gear with 16 teeth run when it is driven by a gear having 72 teeth and running at a velocity of 30 revolutions per minute?

SOLUTION.—Applying the above rule, the required velocity is found to be

$$\frac{72 \times 30}{16} = 135 \text{ rev. per min.} \quad \text{Ans.}$$

VELOCITY RATIO.

31. When comparing the velocities of two gears instead of considering the number of revolutions made by each gear in a given unit of time, as 1 minute or 1 second, it is often more convenient to use the ratio between their respective velocities. This ratio is called the **velocity ratio.** It is the number of revolutions made by one of the gears for 1 revolution of the other. Its numerical value is obtained by dividing the number of revolutions of one gear in a given time by the number of revolutions of the other gear in the same time, the number of revolutions of that gear whose velocity ratio is sought being used as the *dividend.* Instead of the numbers of revolutions in a given time, the numbers representing the diameters or number of teeth may be used to find the numerical value of the velocity ratio, in which case, however, the number of teeth of the gear whose velocity ratio is sought is used as the *divisor.*

EXAMPLE 1.—A pinion makes 150 revolutions per minute and drives a gear making 25 revolutions per minute. What is (*a*) the velocity ratio of the pinion with respect to the gear? (*b*) the velocity ratio of the gear with respect to the pinion?

SOLUTION.—(*a*) The velocity ratio of the pinion, that is, the number of revolutions it makes while the gear is making one, is, according to the above rule, $\frac{150}{25} = 6$. Ans.

(*b*) The velocity ratio of the gear, that is, the number of revolutions it makes while the pinion makes one, is $\frac{25}{150} = \frac{1}{6}$. Ans.

EXAMPLE 2.—A gear has 96 teeth, while the pinion meshing with it has 16 teeth. What is (*a*) the velocity ratio of the pinion? (*b*) the velocity ratio of the gear?

SOLUTION.—(*a*) Dividing the number of teeth of the gear by the number of teeth of the pinion, we get $\frac{72}{12} = 6$ as the velocity ratio of the pinion. Ans.

(*b*) In this case, we have $\frac{12}{72} = \frac{1}{6}$ as the velocity ratio of the gear. Ans.

EXAMPLE 3.—Two gears having diameters of 24 and 36 inches, respectively, mesh together; what are their velocity ratios?

SOLUTION.—The velocity ratio of the 24-inch gear is $\frac{36}{24} = 1\frac{1}{2}$; that is, it makes one and one-half revolutions while the 36-inch gear makes one. The velocity ratio of the 36-inch gear is $\frac{24}{36} = \frac{2}{3}$; that is, it makes two-thirds of a revolution while the 24-inch gear makes one. Ans.

DIAMETERS FOR FIXED CENTER DISTANCES.

32. Rule.—*To find the pitch diameter of the larger gear in a pair when the center-to-center distance of the two gears and their respective velocities are fixed, multiply twice the center-to-center distance by the velocity of the smaller gear and divide the product by the sum of the velocities of the two gears.*

EXAMPLE.—The smaller of two gears is to run five times as fast as the larger. The center-to-center distance being 8 inches, what must be the pitch diameter of the larger gear?

SOLUTION.—By an application of the rule just given, the pitch diameter of the larger gear is found to be

$$\frac{2 \times 8 \times 5}{5 - 1} = 13.333 \text{ in.} \quad \text{Ans.}$$

33. Rule.—*To find the diameter of the smaller gear in a pair when the center-to-center distance of the two gears and their respective velocities are fixed, multiply twice the center-to-center distance by the velocity of the larger gear and divide the product by the sum of the velocities of the two gears.*

EXAMPLE.—Taking the same example that was given in Art. **32**, what should be the diameter of the smaller gear?

SOLUTION.—Applying the rule just given, we have

$$\frac{2 \times 8 \times 1}{5 - 1} = 2.66 \text{ in.}$$

as the diameter of the smaller gear. Ans.

34. Since the center-to-center distance is equal to the sum of the radii of the two gears, it follows that when the diameter of either gear has been calculated, the diameter of the other may be found as follows:

Rule.—*To find the diameter of one gear of a pair of gears, when the center-to-center distance is fixed and the diameter of the other gear is known, subtract one-half of the known diameter from the center-to-center distance and multiply the remainder by 2.*

EXAMPLE.—The center-to-center distance being 8 inches, and the diameter of one gear being 4 inches, what is the diameter of the other gear?

SOLUTION.—Applying the rule just given, we obtain

$$2 \times (8 - 4) = 12 \text{ in.} \quad \text{Ans.}$$

LAYING OUT GEAR-TEETH.

SYSTEMS OF GEARING.

35. As stated in Art. **5,** the motion transmitted by one gear to another will be smooth and uniform only when the teeth of the gears are given definite forms. Theoretically, the number of forms that meet these conditions is large; practically, however, owing to the necessity of simplicity and ease of construction, this number is restricted to a few simple types; while the importance of uniformity has still further restricted the types in common use to two general systems, known as the **involute,** or **single-curve,** system and the **cycloidal,** or **double-curve,** system. Of these two systems, the involute has a number of important advantages, especially when used for cut gears, that are constantly bringing it into more extensive use, and many of the best authorities on gearing urge its universal adoption to the exclusion of the cycloidal system.

INVOLUTE SYSTEM.

DEFINITION.

36. Mathematically, an **involute** is the curve that would be drawn by a pencil point at the end of a thin band, that will not stretch, and that is drawn tight while being unwound from a cylinder. For example, suppose such a band to be unwound from the cylinder in Fig. 6, beginning with the pencil point at *a* on the circumference. As the band is unwound, the pencil point traces the curved line *a*–*1*–*2*–*3*–*4*, etc., which line is a part of the involute of the circle that represents the circumference of the cylinder.

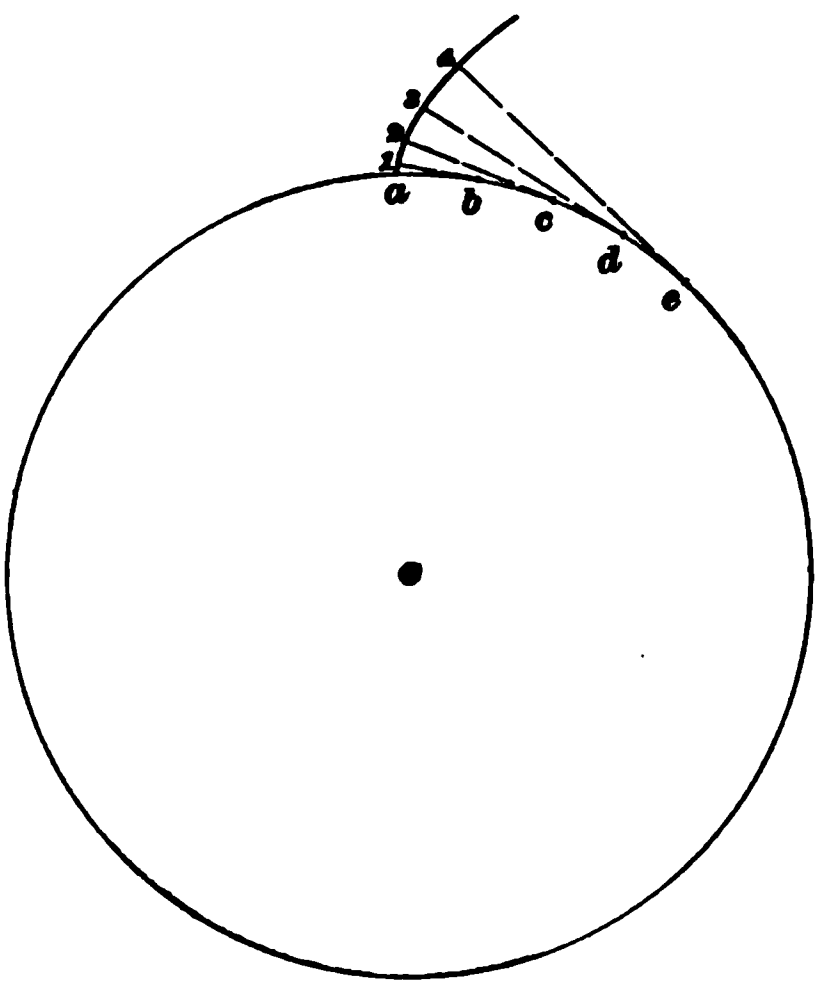

FIG. 6.

LAYING OUT INVOLUTE TEETH.

37. Base Circle.—The base circle in the involute system of gearing is the circle to which the involute that forms the outline of the tooth is drawn. The radius of the base circle is smaller than that of the pitch circle, the difference between the two being generally found by multiplying the pitch diameter by a factor that is constant in any given system, but varies somewhat with different systems. For most purposes, a difference between the radii of the two circles, or the distance between their circumferences, *D*, Fig. 7, equal to $\frac{1}{60}$ of the diameter of the pitch circle, will give satisfactory results. Brown & Sharpe use a value of *D* slightly

smaller than this, their rule being to make the *diameter* of the base circle equal to the product obtained by multiplying the diameter of the pitch circle by .968. In accordance with

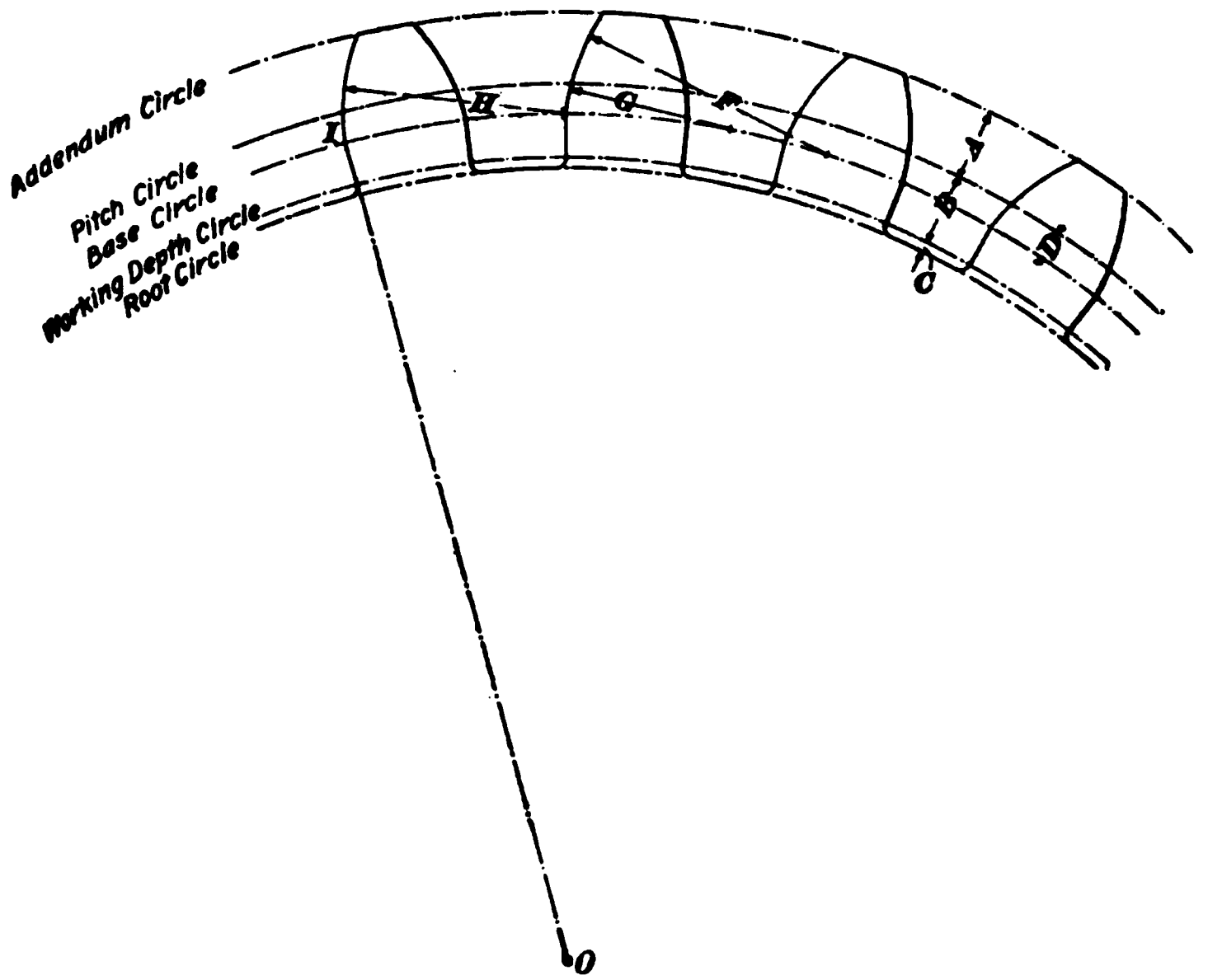

FIG. 7.

this rule, the distance *D* is equal to the diameter of the pitch circle multiplied by .016. This system is used more extensively than any other.

38. Example in Laying Out Teeth.—The general method of laying out the teeth is here described by means of an illustrative example: Let it be required to lay out the teeth for a gear 8 inches in diameter, 3 pitch. By the proportions stated in Art. **15,** the addendum is $1 \div 3 = \frac{1}{3}$ inch, the working depth is $2 \times \frac{1}{3} = \frac{2}{3}$ inch, and the clearance, using The Pratt & Whitney Company's proportions, is $\frac{1}{8} \times \frac{1}{3} = \frac{1}{24}$ inch. By Art. **37,** the distance from the pitch circle to the base circle is $\frac{1}{60} \times 8 = \frac{2}{15}$ inch. First draw the pitch circle, see Fig. 7, with a diameter of 8 inches,

then draw the addendum circle, the base circle, the working-depth circle, and the root circle, making the distances A, B, C, and D, respectively, $\frac{1}{3}$, $\frac{1}{3}$, $\frac{1}{24}$, and $\frac{2}{15}$ inch, in accordance with the calculated values. If no scale by means of which these fractions can be laid off directly is available, they may be reduced to decimals and laid off with a decimal scale.

The pitch being 3, the number of teeth is $3 \times 8 = 24$. The circumference of the pitch circle must, therefore, be divided into 24 equal parts, each of which is to be subdivided into 2 parts, which represent, respectively, the thickness of the tooth and the width of the space on the pitch line. The points of division between these subdivisions of the pitch circle are the pitch points of the teeth; the outlines of the teeth must pass through these points.

39. The work is now ready for the construction of the tooth curves between the base circle and the addendum circle. These curves are generally circular arcs drawn with centers on the base circle, so as to agree as closely as is practicable with the theoretical curves for the tooth. Two methods of drawing them are described in the following articles.

40. Single-Arc Approximation.—By the following method, known as the **single-arc approximation,** the outline of the tooth between the base circle and the addendum circle is the arc of a circle drawn through the pitch point with a center on the base line and a radius H, Fig. 7, equal to $\frac{1}{4}$ of the radius of the pitch circle. In the example under consideration, see Art. **38,** the radius of the pitch circle is $8 \div 2 = 4$ inches, and the radius H with which to draw the tooth outline is $4 \times \frac{1}{4} = 1$ inch. When the number of teeth is greater than 30 and the diametral pitch is not less than 10, this method will give a curve that will be satisfactory for most ordinary work. With larger teeth, however, and especially with wheels having a small number of teeth, the curve so obtained differs considerably from the

TABLE II.

GRANT'S INVOLUTE ODONTOGRAPH.

No. of Teeth.	Divide by the Diametral Pitch.		Multiply by the Circular Pitch.	
	Face Radius.	Flank Radius.	Face Radius.	Flank Radius.
10	2.28	.69	.73	.22.
11	2.40	.83	.76	.27
12	2.51	.96	.80	.31
13	2.62	1.09	.83	.34
14	2.72	1.22	.87	.39
15	2.82	1.34	.90	.43
16	2.92	1.46	.93	.47
17	3.02	1.58	.96	.50
18	3.12	1.69	.99	.54
19	3.22	1.79	1.03	.57
20	3.32	1.89	1.06	.60
21	3.41	1.98	1.09	.63
22	3.49	2.06	1.11	.66
23	3.57	2.15	1.13	.69
24	3.64	2.24	1.16	.71
25	3.71	2.33	1.18	.74
26	3.78	2.42	1.20	.77
27	3.85	2.50	1.23	.80
28	3.92	2.59	1.25	.82
29	3.99	2.67	1.27	.85
30	4.06	2.76	1.29	.88
31	4.13	2.85	1.31	.91
32	4.20	2.93	1.34	.93
33	4.27	3.01	1.36	.96
34	4.33	3.09	1.38	.99
35	4.39	3.16	1.39	1.01
36	4.45	3.23	1.41	1.03
37–40	4.20		1.34	
41–45	4.63		1.48	
46–51	5.06		1.61	
52–60	5.74		1.83	
61–70	6.52		2.07	
71–90	7.72		2.46	
91–120	9.78		3.11	
121–180	13.38		4.26	
181–360	21.62		6.88	

correct curve and, in these cases, more satisfactory results are obtained by the method explained in the following articles.

41. Grant's Involute Odontograph. — By this method, for all gears having fewer than 37 teeth, the portions of the curve on each side of the pitch circle are drawn with a different radius, the center of the arc for each being on the base circle.

The lengths of the radii with which the two arcs are drawn are obtained by the following method: In Table II, which is taken from Grant's "Treatise on Gear-Wheels," are two sets of numbers, a part of each set being in two columns. The first set has the general heading "Divide by the Diametral Pitch" and the two columns in this set have the respective headings "Face Radius" and "Flank Radius." This set is to be used with the diametral-pitch system. To find the radius for the face of a tooth for a gear having less than 37 teeth (see *F*, Fig. 7), divide the number in the column headed "Face Radius," and in the same horizontal line as the number in the column headed "Number of Teeth" that corresponds with the number of teeth in the gear, by the diametral pitch. To find the radius of the flank (see *G*, Fig. 7), divide the corresponding number in the column headed "Flank Radius" by the diametral pitch.

The second set of two columns of numbers is headed "Multiply by the Circular Pitch" and is to be used with the circular-pitch system. It is used in the same manner as the first set, except that the numbers taken from the table are to be *multiplied* by the circular pitch.

42. Applying this method to the diametral-pitch gear of Art. **38,** in which the number of teeth is 24 and the pitch 3, we proceed as follows: To find the radius of the face, we look in the first column for the number 24 and in the same horizontal line in the column headed "Face Radius," we find the number 3.64, which, divided by the pitch, gives us $3.64 \div 3 = 1.21$ inches as the radius of the face. In the

same horizontal line and in the column headed "Flank Radius," we find the number 2.24; this number divided by 3 gives us $2.24 \div 3 = .75$ inch, nearly, as the radius of the flank.

43. Odontograph for Gears Having More Than 36 Teeth.—An inspection of Table II shows that for gears having more than 36 teeth there is but one column of figures under each of the respective headings of diametral pitch and circular pitch. The reason is that the whole curve is drawn with a single radius, whose length is determined by the general method explained in Art. **41.** It is constant for all gears the numbers of whose teeth are included in the several pairs of numbers given in the column headed "No. of Teeth"; for instance, the length of the radius for all numbers of teeth from 37 to 40 is determined by the use of the numbers in the horizontal line in which these numbers occur.

EXAMPLE.—What is the length of the radius for the curves of the teeth of a gear having 64 teeth, 1.473 circular pitch?

SOLUTION.—Since the number of teeth lies between the numbers 61–70 in the first column of the table, and the pitch is in the circular-pitch system, we multiply the pitch by the number 2.07, which is found in the second set of figures at the right of the numbers 61–70 and in the same horizontal row. Performing the multiplication, we get $1.473 \times 2.07 = 3.05$, say, 3 inches, as the length of the radius. Ans.

44. Completing the Outline.—With either of the above methods of constructing the tooth outline, the flanks of the teeth are radial between the base circle and the working-depth circle; this part of the outline is, therefore, made to coincide with the straight line from the center O of the pitch circle to the point where the curved portion of the outline intersects the base circle, as is shown by the line $O\,I$ in Fig. 7. A fillet from the working-depth circle connects the radial portion of the outline with the root circle and completes the outline of the tooth. Brown & Sharpe make the radius of this fillet equal to $\frac{1}{7}$ the width of a space at the addendum circle.

45. Limiting Number of Teeth.—The smallest number of teeth that should be used in a cut gear

whose teeth are laid out by the method explained in Art. **40,** is 30; with a smaller number, the difference between the curve obtained by this method and the correct curve is so great as to cause the teeth to work unsatisfactorily. By using Grant's odontograph table in the manner explained in Art. **42,** it is possible to make satisfactory gears that have as few as 10 teeth.

46. Grant's Rule for Rack Teeth.—The teeth of a rack that is to mesh with an involute gear of a given pitch may be laid out by the following method, which is known as **Grant's rule for rack teeth.** First draw the addendum, pitch, and root lines, Fig. 8, making the distances A and B each equal to 1 divided by the diametral pitch, and the distance C equal to $\frac{1}{8}$ of A. On the pitch line lay off the pitch distances D, D, and divide them into the two parts t and s, corresponding, respectively, to

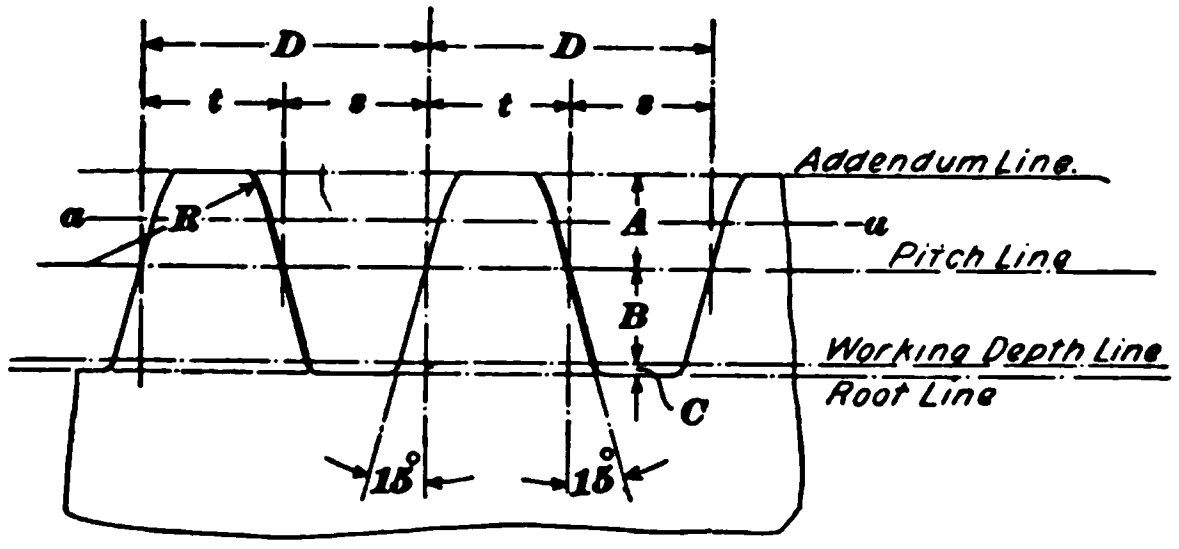

FIG. 8.

the thickness of the teeth and the width of the spaces on the pitch line. Draw the sides of the teeth from the working-depth line to the line a a, which is drawn half-way between the pitch line and the addendum line, as straight lines making angles of 15° with lines that pass through the pitch points perpendicular to the pitch line. Draw the outer half of the addendum as a circular arc having a radius R whose length is 2.10 divided by the diametral pitch, or .67 multiplied by the circular pitch. A fillet from the working-depth line to the root line completes the outline of each side of the tooth.

CYCLOIDAL SYSTEM.

DEFINITIONS.

47. In mathematics, a **cycloid** is the path described by a point on the circumference of a circle as the circle rolls upon a straight line; thus, the curve *a b c* described by the point *b* as the circle *j* rolls along the line *a c* is called a cycloid. The circle *j* is called a **describing circle.** When the describing circle, as *h*, Fig. 9 (*b*), rolls upon the outside of another circle, as *g*, the curve *e d* described by any point on the describing circle, as *e*, is called an **epicycloid.** If the describing circle, as *i*, rolls on the inside of another circle, as *g*, the curve *e f* generated by any point of the describing circle, as *e*, forms what is called a **hypocycloid.** If the circle *i* has a diameter just one-half the diameter of the circle *g*, the hypocycloid will be a straight line, or a diameter of the circle *g*. If the diameter of the circle *i* is less than half that of the circle *g*, the hypocycloid will have a curve as shown at *e f*, while if the diameter of *i* is more than half the diameter of *g*, the curve would extend to the left from the point *e* instead of to the right of *e*.

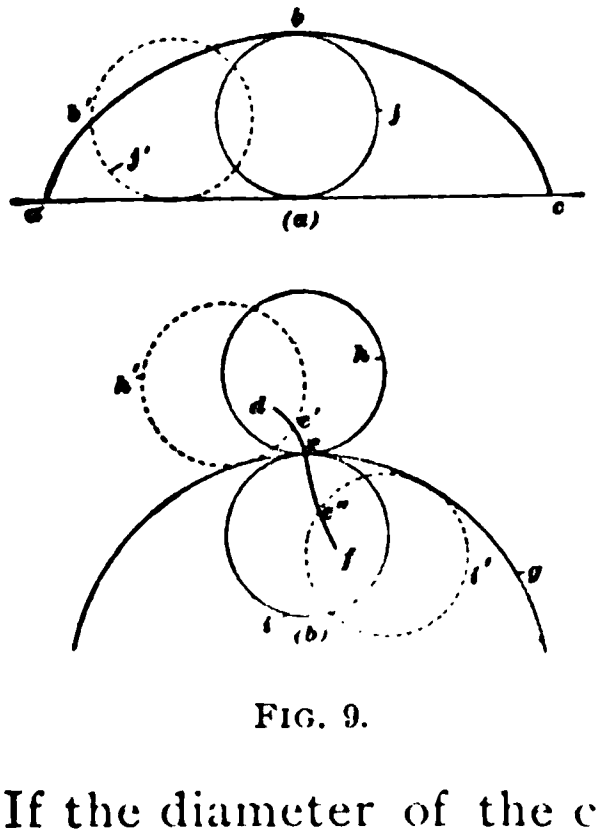

FIG. 9.

LAYING OUT CYCLOIDAL TEETH.

48. General Directions. — The pitch, addendum, working depth, and root circles are drawn and the pitch, thickness of teeth, and width of spaces on the pitch circle are laid off as described for the involute system in Art. **38.** After this the outlines of the teeth may be drawn as theoretical curves, but the more common method is to draw the curves for the faces and flanks as circular arcs that agree as nearly as is practicable with the theoretical curves.

49. Grant's Cycloidal Odontograph.—One of the most accurate practical methods of laying out the approximate curves of cycloidal teeth by means of circular arcs has been devised by Mr. George B. Grant. The lengths of the radii of the arcs and the location of their centers are determined by the pitch and number of teeth of the gear, in conjunction with a table of factors that apply to gears of all sizes from a 10-tooth pinion to a rack. Any two gears with teeth of the same pitch and length laid out by this method will work satisfactorily with each other. The base of the odontograph is a describing circle whose diameter is equal to the radius of the 12-tooth pinion; a gear laid out by its use will, therefore, work satisfactorily with any gear having the same pitch and general tooth dimensions, and with theoretical cycloidal curves constructed with a describing circle whose diameter is equal to the radius of the 12-tooth pinion.

50. Use of Cycloidal Odontograph.—The first step in the use of the odontograph is the location of the circles on which lie the centers of the arcs, Fig. 10. These circles are concentric with the pitch circle, and their distances from

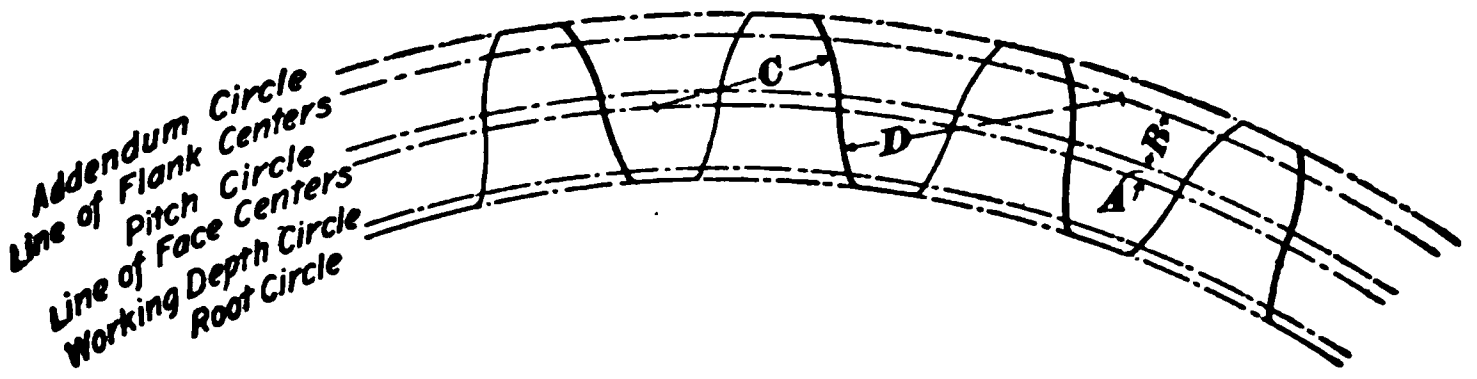

FIG. 10.

it are determined in the following manner: In Table III, which is taken from Grant's "Treatise on Gear-Wheels," are three sets of numbers, headed, respectively, "Number of Teeth," "Divide by the Diametral Pitch," and "Multiply by the Circular Pitch." To find the distance from the pitch circle at which to draw the line of face centers for a diametral-pitch gear with a given number of teeth (see *A*, Fig. 10), use the numbers headed "Diametral Pitch" and select from the column headed "Distances *A*," under the heading "Faces," the number in the same horizontal line as the

TABLE III.

GRANT'S CYCLOIDAL ODONTOGRAPH.

No. of Teeth.	Divide by the Diametral Pitch.				Multiply by the Circular Pitch.			
	Faces.		Flanks.		Faces.		Flanks.	
	Rad. *C*.	Dis. *A*.	Rad. *D*.	Dis. *B*.	Rad. *C*.	Dis. *A*.	Rad. *D*.	Dis. *B*.
10	1.99	.02	−8.00	4.00	.62	.01	−2.55	1.27
11	2.00	.04	−11.50	6.50	.63	.01	−3.34	2.07
12	2.01	.06	∞	∞	.64	.02	∞	∞
13–14	2.04	.07	15.10	9.43	.65	.02	4.80	3.00
15–16	2.10	.09	7.86	3.46	.67	.03	2.50	1.10
17–18	2.14	.11	6.13	2.20	.68	.04	1.95	.70
19–21	2.20	.13	5.12	1.57	.70	.04	1.63	.50
22–24	2.26	.15	4.50	1.13	.72	.05	1.43	.36
25–29	2.33	.16	4.10	.96	.74	.05	1.30	.29
30–36	2.40	.19	3.80	.72	.76	.06	1.20	.23
37–48	2.48	.22	3.52	.63	.79	.07	1.12	.20
49–72	2.60	.25	3.33	.54	.83	.08	1.06	.17
73–144	2.83	.28	3.14	.44	.90	.09	1.00	.14
145–300	2.92	.31	3.00	.38	.93	.10	.95	.12
301 to Rack	2.96	.34	2.96	.34	.94	.11	.94	.11

number corresponding to the number of teeth in the gear and which is found in the column headed "Number of Teeth." This number divided by the diametral pitch gives the distance in inches from the pitch circle to the circle of face centers. The distance *B* from the pitch circle to the circle of flank centers is found by dividing the number in the column headed "Distances *B*," under the heading "Flanks" and in the same horizontal line as the number corresponding to the number of teeth in the gear, which is found in the column headed "Number of Teeth," by the diametral pitch.

The lengths of the radii *C* and *D* of the arcs forming the outlines of the faces and flanks of the teeth are found by dividing the numbers in the respective columns headed "Rad. *C*" and "Rad. *D*," and in the same horizontal line as that in which the number of teeth is found, by the diametral pitch.

51. For a circular-pitch gear, the numbers headed "Multiply by the Circular Pitch" are to be used. The numbers are selected as in the diametral-pitch system, but the several distances and lengths of radii are found by *multiplying* the numbers in the table by the circular pitch.

52. Flanks for Gears Having 10 and 11 Teeth. The numbers in the table for the flank radii of gears having 10 and 11 teeth are preceded by the minus sign (—). This indicates that the direction of curvature of the flanks is opposite to that of the gears that have a larger number of teeth and that the centers from which the flanks are drawn must be taken on the opposite side of the tooth. The flanks of gears having a small number of teeth are convex; those having a larger number of teeth, concave.

53. The flanks for gears having 12 teeth are *radial.* This fact is indicated in the table by the symbol for infinity (∞) in the columns for length of flank radius and distance from pitch circle to line of flank centers. To draw the flanks for these teeth draw a straight line from the pitch point toward the center of the pitch circle.

54. Example in Use of Cycloidal Odontograph. It is required to draw the teeth for a wheel having cycloidal teeth, the wheel to be $12\frac{3}{4}$ inches in diameter with 32 teeth. In accordance with the statement made in Art. **9**, the circular pitch is $\frac{12.75 \times 3.1416}{32} = 1.2517$ inches, or $1\frac{1}{4}$ inches, nearly. By the rule given in Art. **16**, we find the corresponding diametral pitch to be $3.1416 \div 1.2517 = 2.513$; consequently, in accordance with the proportions given in Art. **15**, the dimensions of the teeth will be as follows: Addendum $= 1 \div 2.513 = .398$, or $\frac{13}{32}$ inch, nearly, and the working depth will be $\frac{13}{32} \times 2 = \frac{13}{16}$ inch. The clearance is $.398 \times \frac{1}{8} = .05$, or $\frac{1}{16}$ inch, nearly, according to The Pratt & Whitney Company's proportions. If the back lash is made $\frac{1}{50}$ of the circular pitch, the difference between the thickness of the tooth and the width of the space on the pitch line will be $1.2517 \times \frac{1}{50} = .025$ inch; this will give a thickness of tooth of $\frac{1.2517 - .025}{2} = .6133$, or $\frac{39}{64}$ inch, nearly.

Now draw the pitch, addendum, working depth, and root circles, in accordance with the calculated dimensions; then divide the circumference of the pitch circle by 32 and set this distance off a few times on the pitch circle, and divide each of these parts into 2 portions to represent, respectively, the thickness of the teeth and the width of the spaces. The points of division so obtained are the pitch points of the teeth. In practice only a few teeth are drawn, as shown in Fig. 10. In order to set the dividers to the proper pitch distance, it is well to multiply the calculated distance by some convenient number, lay this distance out on a straight line, and then with the dividers divide the line into a number of parts corresponding to the multiplier used. This method reduces the error in setting the dividers. For instance, if the circular pitch were .7854 inch, the dividers could be set as follows: Multiply .7854 by 4, which gives 3.1416 inches. With a scale lay off 3.14 inches, and then with the dividers step this distance off into four equal parts, which will give a more accurate setting than could be obtained directly from the scale.

Referring now to Table III, we find that the number of teeth in the gear lies between the numbers 30 and 36 that are found in the column headed "Number of Teeth"; the factors for this gear will, therefore, be found in this horizontal row. Using the circular pitch for the calculations, the factors must also be taken from the set of figures headed "Multiply by the Circular Pitch" Applying these factors as directed in Art. **41**, we have: Face radius = .76 × 1.2517 = .95 inch; distance from pitch circle to line of face centers = .06 × 1.2517 = .075 inch; flank radius = 1.20 × 1.2517 = 1.5 inches; and distance from pitch circle to line of flank centers = .23 × 1.2517 = .288 inch We now have all the dimensions and data required to enable us to complete the laying out of the teeth as shown in Fig 10; from the outlines so constructed a templet for the cutter may be made.

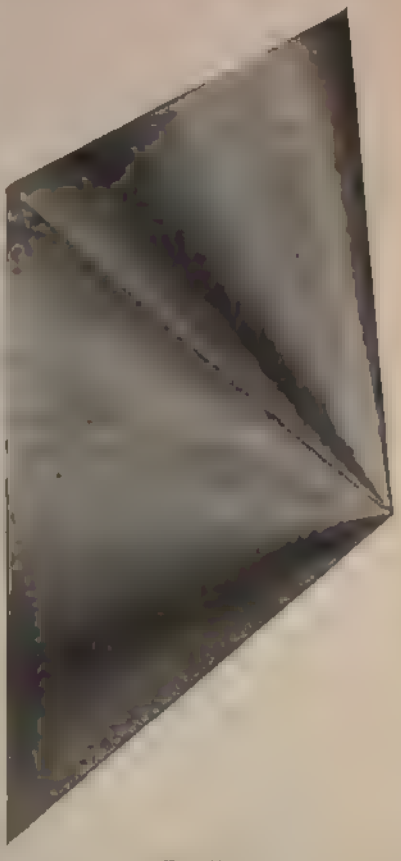

FIG. 11

BEVEL GEARS.

INTRODUCTION.

55. Rolling Cones. In Arts **3**, **4**, and **5**, it was explained that the motion of a pair of spur gears with correctly formed teeth is the same as that of two cylinders having diameters equal to the pitch diameters of the gears and rolling in contact with

each other, without slipping. In a similar way, the motion of a pair of bevel gears is the same as that of a pair of cones, Fig. 11, rolling together.

56. Fig. 12 represents a pair of bevel gears in which the rolling cones are in contact, so that if the teeth were continued all around the gears, the latter would be in mesh. The proportions of these gears are so chosen that their relative motion will be the same as that of the pair of rolling cones in Fig. 11. The relation between the gears and their corresponding cones is still further shown in Fig. 12 by the dotted outlines Oab and Obc of a pair of cones having the same dimensions as those in Fig. 11.

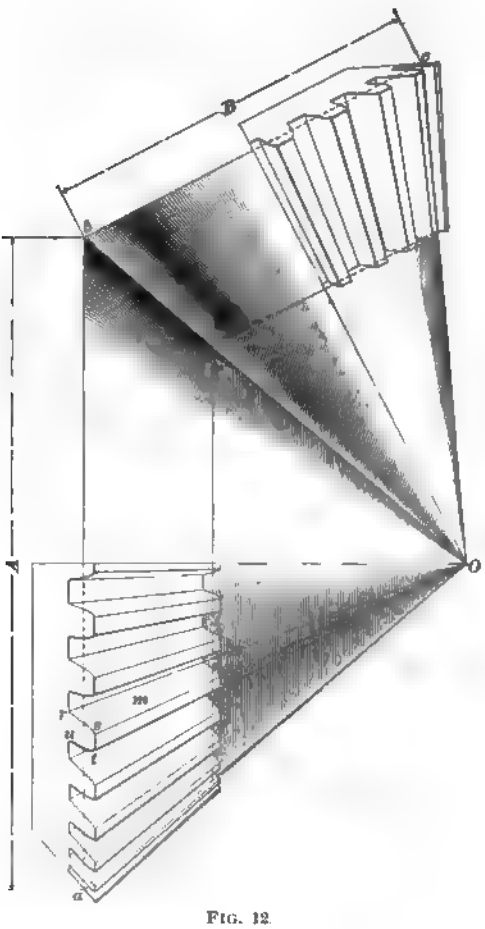

FIG. 12

57. The cones whose relative motion corresponds to that of a pair of bevel gears are called the **pitch cones** of the gears. The **pitch circle** of a bevel gear is the circle represented by the *base* of its pitch cone. The **diameter** of a bevel gear is always understood to mean the diameter of its pitch

circle; for example, the diameters A and B of the pair of gears shown in Fig. 12 are, respectively, the diameters $a\,b$ and $b\,c$ of the bases of the two pitch cones $O\,a\,b$ and $O\,b\,c$.

58. Convergence of Teeth.—In nearly all bevel gears found in practical use, the pitch cones have a common apex at the point of intersection of the center lines of the shafts connected by the gears, and the axes of the cones coincide with the center lines of these shafts. If the teeth of such gears are correctly formed, each tooth surface is made up of a series of straight lines, each of which passes through the point of intersection of the center lines of the shaft, or the common apex of the two pitch cones; the teeth of a bevel gear may, therefore, be conceived as having been cut out by a straight line that always passes through the apex of the pitch cone while it is moved in contact with the outlines of the bases of the teeth. For example, in Fig. 12, if we consider a straight line always passing through O while it is moved in contact with the outline $r\,s\,t\,u$ of the base of a correctly formed tooth, the line will coincide with the surface m of the tooth for every point of its motion. On account of this convergence of the surfaces of the teeth, and the consequent change in the size of the tooth curves, it is impossible to correctly form either side of the teeth by passing a formed cutter, which may be either a planing tool or a milling cutter, but once over the sides of each tooth.

BEVEL-GEAR CALCULATIONS.

59. The relations between the pitch diameters, pitch, numbers of teeth, and velocities of bevel gears are the same as the corresponding relations between the same features of spur gears; problems involving these relations may, therefore, be solved by an application of the rules presented in Arts. **18, 19,** and **30,** remembering that the diameter of each of the bevel gears is that of the base of its pitch cone.

LAYING OUT BEVEL GEARS.

60. Laying Out Pitch Cones.—To lay out the pitch cones, first draw the center lines *o a* and *o b*, Fig. 13, of the shafts at the required angle with each other. The next step depends on the velocity ratio, or the relation between the

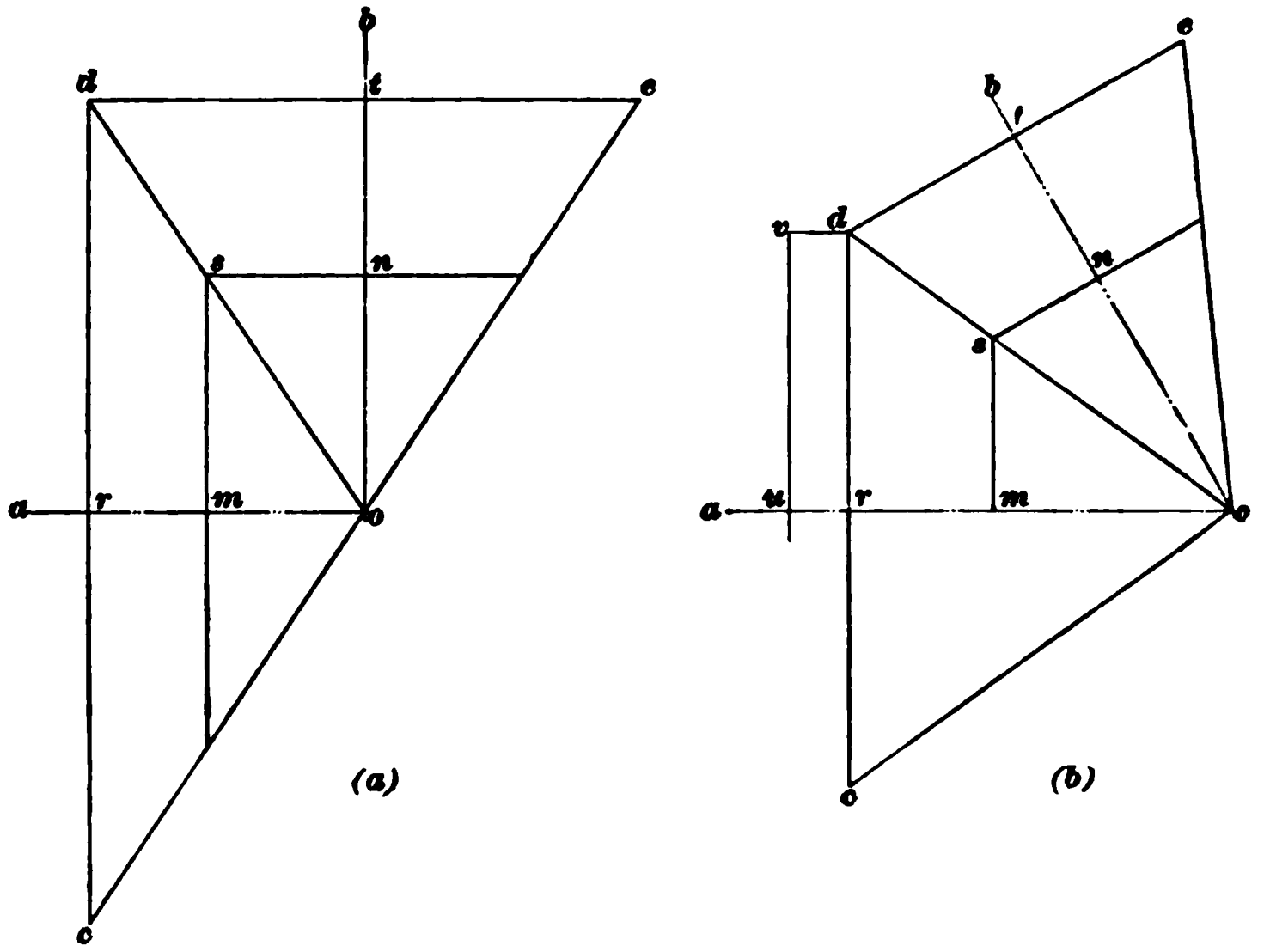

FIG. 13.

diameters, or the numbers of teeth of the two gears, and the conditions imposed on their diameters, or their distance from the point of intersection of the center lines of the shafts.

61. When the shafts are at right angles to each other, and the diameters of the gears are given, or can be calculated, lay off from the point of intersection *o*, Fig. 13 (*a*), a distance on each line equal to the radius of the gear on the other shaft. Through the points *r* and *t* so obtained, draw the perpendiculars *c d* and *c d* intersecting in *d*. Lay off *r c* and *t c* equal, respectively, to *r d* and *t d* and draw the lines *o c*, *o d*, and *o c*, thus completing the outlines of the pitch cones *o c d* and *o d c*. The angles *c o a*, or *d o a*, and

e o b, or *d o b*, are called the **center angles** of their respective pitch cones.

62. Laying Off Angles When Shafts Are Not at Right Angles.—Lay off on the center line of each shaft convenient distances, as *o m* and *o n*, Fig. 13 (*b*), that are proportional either to the velocity of the gear on that shaft, or to the diameter, or to the number of teeth of the gear on the other shaft. Through the points *m* and *n* so obtained, draw lines perpendicular to the center lines of the shafts. The line *o s* drawn through the point of intersection *s* of these perpendiculars and the point of intersection *o* of the center lines of the shafts fixes the center angles *d o a* and *d o b* of the gears.

EXAMPLE.—Lay out the center angles of a pair of bevel gears for the shafts whose center lines are *o a* and *o b*, Fig. 13 (*a*). The gears are to have 48 and 32 teeth, respectively, and the angle between the center lines is 90°.

SOLUTION.—Since the gear on the shaft *o a* is to have 48 teeth while that on *o b* has 32, the distances laid off must be, respectively, proportional to 32 and 48; or, since both of these numbers can be divided by 16 with quotients of 2 and 3, respectively, the proportional distances are as 2 and 3. Therefore, lay off on *o a* a distance *o m* equal to 2 divisions, and on *o b* a distance *o n* equal to 3 divisions on some convenient scale and obtain the points *m* and *n*, through which draw the lines *m s* and *n s* perpendicular, respectively, to the center lines *o a* and *o b*. By drawing the line *o s* through the point of intersection *s* of these perpendiculars and the point of intersection *o* of the center lines, the center angles *a o s* and *b o s* of the pitch cones are obtained. Ans.

63. *When the distance from the point of intersection of the center lines to the base of one of the cones is fixed*, the completion of the cones is accomplished in the following manner: Lay off the given distance, as *o r*, Fig. 13 (*b*), on its proper center line. Through the point *r* draw the line *c d* perpendicular to *o a*, extending it until it intersects the line *o s* in *d*, and lay off *r c* equal to *r d*. Through *d* draw the line *d e* perpendicular to *o b* and make *t c* equal to *t d*. Draw *c o* and *e o*. The outlines of the two pitch cones are then *c o d* and *d o e*, respectively, and the pitch diameters of the two gears are *c d* and *d e*.

64. *When the diameter of one or both of the gears is fixed*, the pitch cones may be laid out by the method illustrated in Fig. 13 (*b*). First lay out the contact line *o s*, Fig. 13 (*b*), by the method explained in Art. **62**; then, from any convenient point, as *u*, on the center line of the gear whose diameter is given, draw a perpendicular *u v*, and on it lay off the distance *u v* equal to the radius of the gear. Through *v* draw a line *v d* parallel to *o a* until it intersects the contact line *o s* in *d*. The point *d* will be one extremity of the pitch lines of the gears. From *d*, draw the lines *d c* and *d c* perpendicular, respectively, to the axes *o a* and *o b*, make the distances *r c* and *t c* equal, respectively, to *r d* and *t d*, and from the points *c* and *c* draw the lines *c o* and *c o*. The outlines of the pitch cones are *c o d* and *d o c*.

65. Laying Out Blanks.—The method of laying out the blanks for a pair of bevel gears is illustrated in Fig. 14. First construct the pitch cones *o c d* and *o d c*. On the lines *c o*, *d o*, and *c o* lay off the distances *c c'*, *d d'*, and *c c'*, each being equal to the length of the face of the required teeth, and through the points *c* and *c'*, *d* and *d'*, *c* and *c'*, representing the ends of the teeth, draw lines perpendicular to the lines *o c*, *o d*, and *o c* on which these points are located, producing the lines through *d* and *d'* until they intersect the center lines *o a* and *o b* in the points *f*, *g*, *f'*, and *g'*.

On the perpendicular through *c* lay off *c h'*, *c i'*, and *i' j'*, equal, respectively, to the face, the flank, and the clearance of the required teeth, calculating these values from the pitch, and remembering that the pitch diameter is the diameter *c d* of the base of the pitch cone. In a similar manner, lay off the distances *d h*, *d i*, and *i j* representing the face, flank, and clearance of the tooth of the gear *A*, whose pitch point is *d*, and the corresponding distances *d i*, *d h*, and *h k*, *c i''*, *c h''*, and *h'' k''* of the teeth of the pinion *B*. From each of the points so determined, draw a line to the point *o*. Those parts of these lines included between the perpendiculars through the points representing the ends of the teeth

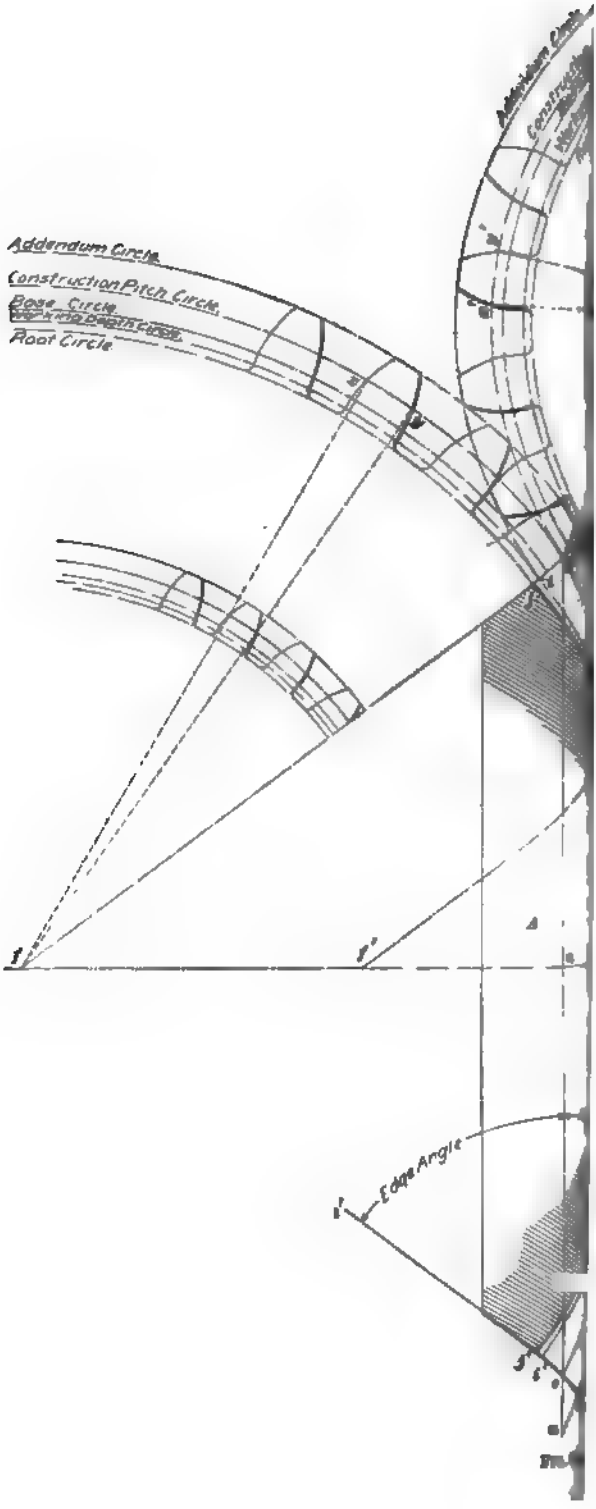
Addendum Circle
Construction Pitch Circle
Base Circle
Root Circle
Edge Angle

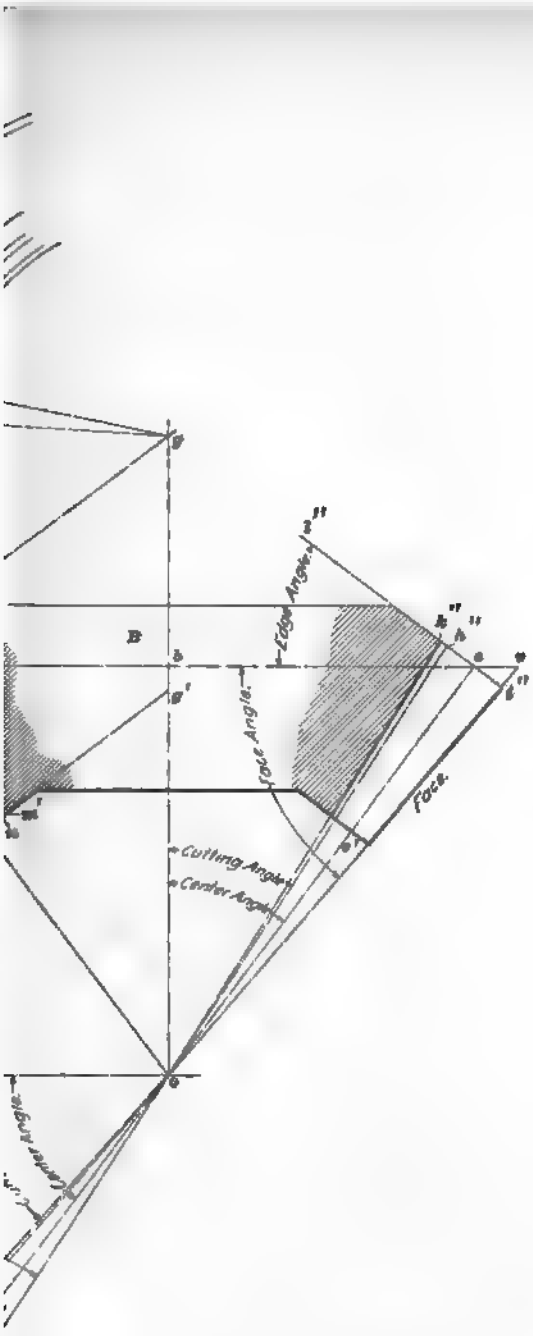
Edge Angle.
Face Angle.
Face.
Cutting Angle.
Center Angle.
Clearance Angle.

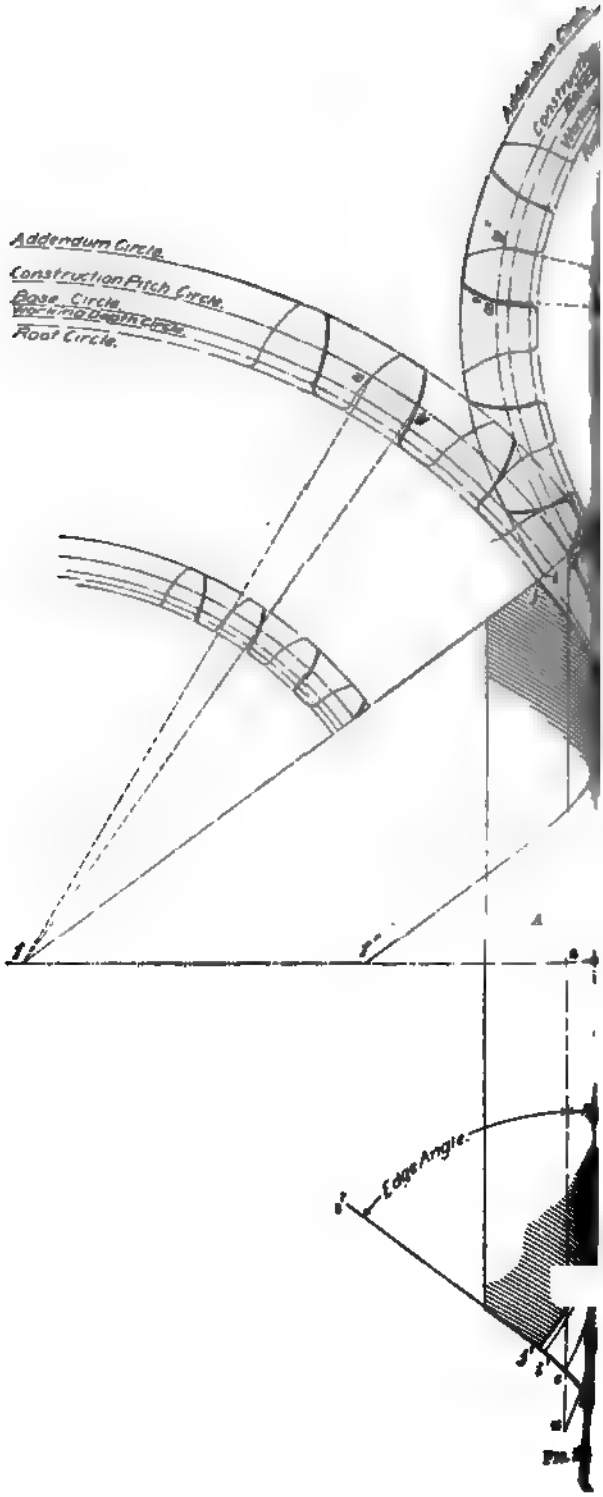
Addendum Circle.
Construction Pitch Circle.
Base Circle.
Working Depth Circle.
Root Circle.
Edge Angle.

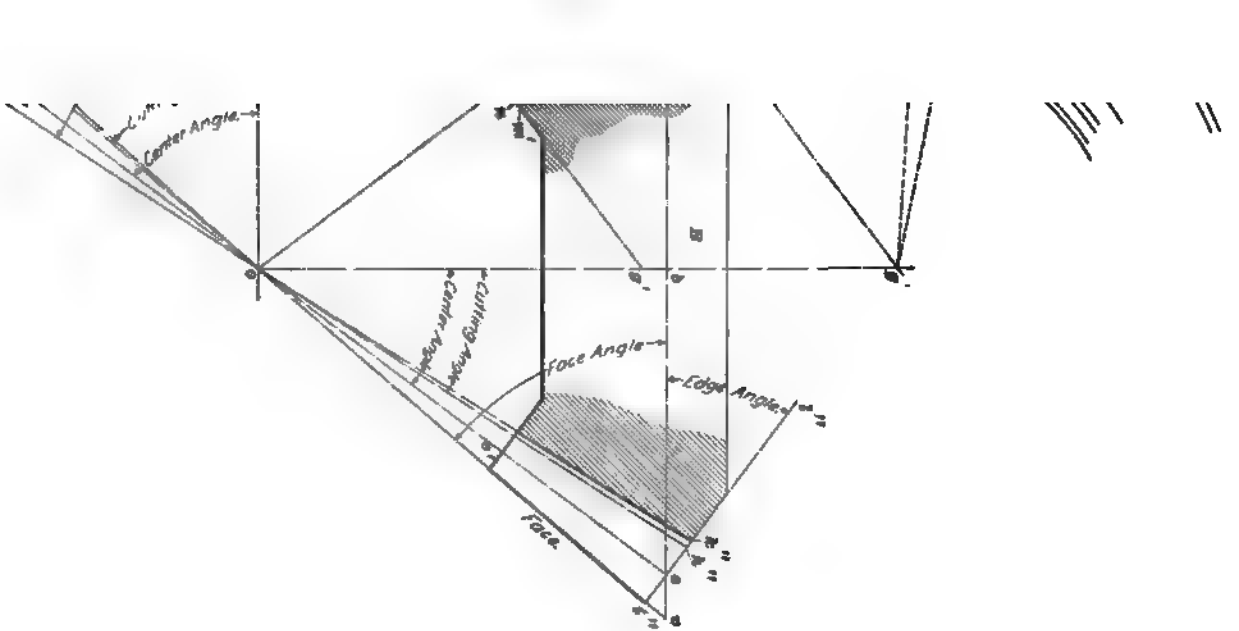
Center Angle
Cutting Angle
Center Angle
Face Angle
Edge Angle
Face

give the outlines of the teeth and fix the outside diamters $h\,h'$ and $i\,i''$ of the blanks.

The angles $o\,u\,a$ and $o\,v\,b$ are the **face angles** and $l'\,c\,a$ and $l''\,c\,b$ are the **edge angles.** These angles are used in turning up the blanks preparatory to cutting the teeth. In some cases it may be more convenient while turning up the blanks to work from the angles $h'\,o\,a$ and $i''\,o\,b$; when the face angles are given, these angles may be found by subtracting the corresponding face angles from 90°. The **cutting angles** $i'\,o\,a$ and $h''\,o\,b$ are used for setting the blank when the teeth are to be cut in the milling machine. When the gears are to be cut by planing, the angles $j'\,o\,a$ and $b\,o\,k''$ are taken as the cutting angles. Since the lines $l'\,h'$ and $l''\,i''$ are, respectively, perpendicular to the lines $o\,c$ and $o\,c$, the edge angles $l'\,c\,a$ and $l''\,c\,b$ are, respectively, equal to the center angles $c\,o\,a$ and $c\,o\,b$.

66. Determining the Angles of the Blanks.—The edge, face, cutting, and center angles are generally determined by measuring the drawing with a protractor. It is seldom practicable to set the milling machine or gear-cutter to angles smaller than $\frac{1}{4}$ of a degree, or 15′; it is, therefore, useless, in most cases, to attempt to measure the angles on the drawing to a greater degree of precision.

67. Outside Diameters of Blanks.—The outside diameters of the blanks may generally be determined with a sufficient degree of accuracy by measuring from a carefully made drawing like that of Fig. 14. It is better, however, to have this diameter carefully computed in the drawing room and the dimension placed upon the drawing.

68. Laying Out Tooth Curves.—Having the pitch cones and the side outlines of the teeth laid out, draw arcs of circles with radii equal to the distances $f\,j$, $f\,i$, $f\,d$, and $f\,h$; and $g\,k$, $g\,h$, $g\,d$, and $g\,i$ about f and g as centers, to represent the roots, working depths, pitch points, and addenda of the teeth at the larger end. In Fig. 14, these arcs are on the drawing on which the blanks are laid out, but, if desirable, they may be made upon separate sheets.

These arcs are used in laying out the tooth curves in the same manner as the similar circles for spur gears are used.

In explaining the use of these arcs for laying out the teeth, the circle, of which the arc representing the pitch circle forms a part, will be called the **construction pitch circle,** as designated on the drawing, Fig. 14, to distinguish it from the actual pitch circle of the gear.

69. To lay out the curves for the larger ends, lay off on the construction pitch circle, spaces equal to the circular pitch. The length of these spaces is found by dividing the circumference of the pitch circle of the gear by the number of teeth. Divide each space into two parts to represent, respectively, the thickness of the tooth and the width of the space, thus obtaining the pitch points of the teeth. The tooth curves are then to be drawn through these pitch points.

70. When the involute system of teeth is used, the distance from the construction pitch circle at which to draw the base circle is to be calculated from the diameter of the construction pitch circle. In using the involute or the cycloidal odontograph table, the number of teeth to be used in selecting from the table the factor for calculating the face and flank radii, or the distances from the pitch circle to the lines of face and flank centers, is the number found by dividing the circumference of the construction pitch circle by the circular pitch; in other words, instead of using the actual number of teeth in the gear, use the number of teeth there would be in a gear having the required pitch and a diameter equal to that of the construction pitch circle. In dividing the circumference of the construction pitch circle by the circular pitch, the result will rarely be a whole number and hence the nearest whole number is taken.

71. To draw the outlines of the inner ends of the teeth, draw a set of arcs similar to those drawn for the outer ends, using radii equal to the distances $f'm$, $f'n'$, $f'd'$, and $f'n$, or $g'm'$, $g'n$, $g'd'$, and $g'n'$, and lay out the teeth on these arcs in accordance with the general method used for the outer ends. It will generally be better to draw these arcs

with the same centers with which the arcs for the outer ends were drawn, as shown in Fig. 14. Instead of calculating the pitch for the inner ends, a convenient method of locating the pitch points is to draw lines from the centers to the pitch points of the outer ends, as shown by the dotted lines $f x$, $f y$, $g x'$, and $g y'$. The points where these lines intersect the construction pitch circles for the inner ends of the teeth will be the pitch points through which to draw the curves for the outlines of the inner ends.

WORM-WHEELS AND WORMS.

KINDS OF WORM-WHEELS.

72. A worm and worm-wheel are a combination of machine elements used for transmitting motion from one shaft to another at right angles to it. The **worm**, as a reference to Fig. 15 will show, is simply a screw whose threads fit the teeth of the **worm-wheel**.

FIG. 15.

73. In practice, a worm-wheel is made in one of the three different ways shown in Fig. 16. In Fig. 16 (*a*), the teeth are seen to be curved to fit the worm; such a wheel is cut with a hob, and is, hence, called a **hobbed** worm-wheel. The tool used for cutting it being practically a duplicate of the worm, the latter will fit the worm-wheel; if the cutting is carefully done, the contact between the worm and worm-wheel is all that can be desired. A hobbed worm-wheel should always be used if

much power is to be transmitted, as it will outlast either of those shown in Fig. 16 (*b*) and (*c*).

74. Referring to Fig. 16 (*b*), the wheel is seen to have straight teeth cut at an angle to the axis; this angle is made to suit the angle of the helix of the worm. Obviously, the contact of the threads of the worm with the teeth of

FIG. 16.

such a worm-wheel is rather imperfect; since this kind of a worm-wheel can be cut with an ordinary standard gear-cutter at an expense but slightly in excess of that of a spur gear, it is much used for light work. The worm-wheel with straight teeth at an angle to the axis is designed by the same rules as a spur gear, the angle that the teeth make with the axis is determined by trial in cutting it.

75. Fig. 16 (*c*) shows a form of worm-wheel that is occasionally used on gear-cutting engines where a man has to take hold of the gear and turn it by hand. One advantage these teeth possess is that they are so protected as to be less liable to injury than those shown in Fig. 16 (*a*) and (*b*).

The outside diameter of a worm-wheel of this kind may be the same as that of the spur wheel having the same pitch and number of teeth. For ordinary work, the notches are frequently cut with a fly cutter set to a radius slightly larger than that corresponding to the outside diameter of the worm. If a standard cutter of the right pitch and diameter is available, it should be used in preference to the fly cutter. Nothing is to be gained by curving the face of the wheel to suit the worm when a worm-wheel of the kind shown in Fig. 16 (*c*) is not to be finished by hobbing. Worm-wheels of this kind are frequently very carefully and accurately made and used in graduating machines or dividing engines. Worm-wheels of this kind may also be finished by hobbing, but the hob is not sunk into the wheel to as great a depth as in the wheel shown in Fig. 16 (*a*).

DESIGNING WORM-WHEELS.

76. The number of teeth that a worm-wheel must have to produce a given velocity ratio is found as follows:

Rule.—*Multiply the number of revolutions that the worm is to make for one revolution of the worm-wheel by the number of threads of the worm.*

EXAMPLE 1.—If a single-threaded worm is to make 56 revolutions in order to revolve the worm-wheel once, how many teeth should the latter have?

SOLUTION.—Applying the rule just given, we get $56 \times 1 = 56$. Ans.

EXAMPLE 2.—If a triple-threaded worm is to make 24 revolutions in order to revolve the worm-wheel once, how many teeth should the latter have?

SOLUTION.—Applying the rule, we get $24 \times 3 = 72$. Ans.

77. To design a worm-wheel that is to be hobbed and has 30 or more teeth, first of all calculate the pitch diameter *a b*, Fig. 17, as follows:

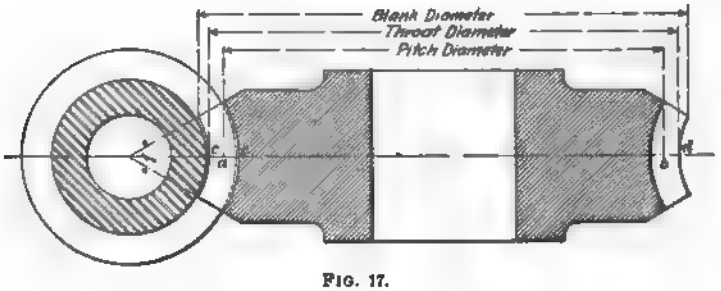

FIG. 17.

Rule.—*Multiply the number of teeth by the center-to-center distance of adjacent threads of the worm and divide the product by 3.1416.*

Observe that in the case of a single-threaded worm, the center-to-center distance of adjacent threads is equal to the amount the thread advances in one revolution, or the **lead** of the thread. In the case of a multiple-threaded worm, the center-to-center distance of adjacent threads is lead ÷ number of threads.

EXAMPLE.—Calculate the pitch diameter of a worm-wheel having 42 teeth for a double-threaded worm having a lead of 1 inch.

SOLUTION.—The center-to-center distance of adjacent threads of the worm is 1 ÷ 2 = .5 inch. Applying the rule, we get

$$\frac{42 \times .5}{3.1416} = 6.684 \text{ in.} \quad \text{Ans.}$$

78. The throat diameter of the worm-wheel, as *c d*, Fig. 17, is calculated as follows:

Rule.—*Divide twice the pitch diameter by the number of teeth and add the quotient to the pitch diameter.*

EXAMPLE.—Taking the example given in Art. **77**, what should be the throat diameter?

SOLUTION.—Applying the rule, we get

$$6.684 + \frac{6.684 \times 2}{42} = 7.002 \text{ in.} \quad \text{Ans.}$$

79. In accordance with Brown & Sharpe practice, the depth *c c* of the tooth is calculated by the following rule:

Rule.—*Multiply the center-to-center distance of adjacent threads of the worm by .6866.*

EXAMPLE.—Taking the same example as was given in Art. **77**, what should be the depth of the teeth ?

SOLUTION.—The center-to-center distance of adjacent threads of the worm is .5 inch. Applying the rule just given, we have

$$.5 \times .6866 = .3433 \text{ in.} \quad \text{Ans.}$$

The diameter of the blank is most conveniently obtained by measuring a scale drawing of the worm-wheel. The angle *f* may be made from 60° to 90°.

80. When the worm-wheel has less than 30 teeth, calculate the pitch diameter by the rule given in Art. **77**, and the depth of the teeth by the rule given in Art. **79**; the throat diameter is, however, to be calculated by the following rule:

Rule.—*Multiply the product of the center-to-center distance of adjacent threads of the worm and the number of teeth of the worm-wheel by .298. Add to it 1.273 times the center-to-center distance of adjacent threads of the worm.*

EXAMPLE.—Find the throat diameter for a worm-wheel with 24 teeth meshing with a single-threaded worm having a lead of .75 inch.

SOLUTION.—Since the worm is single-threaded, the center-to-center distance of adjacent threads is .75 inch. Applying the rule, we get

$$.75 \times 24 \times .298 + 1.273 \times .75 = 6.319 \text{ in.} \quad \text{Ans.}$$

DESIGNING THE WORM.

81. The velocity ratio of a worm and worm-wheel is independent of the relative pitch diameters of the worm-wheel and worm, from which fact it follows that in designing a worm and worm-wheel for a given center-to-center distance, we have the choice of many different designs. One good method of procedure is as follows:

For the worm, choose some convenient lead of thread that can be cut readily in an engine lathe. From this, compute the pitch diameter of the worm-wheel. Subtract half the pitch diameter of the worm-wheel from the center-to-center distance and double the remainder, in order to obtain the pitch diameter of the worm. If a comparison of the pitch diameter of the worm with the pitch diameter of the worm-wheel shows the former to be larger than is considered desirable, choose a coarser thread for the worm and again compute the pitch diameters. Repeat this series of operations until the ratio of the two pitch diameters is considered to be about right.

82. The pitch diameter a of the worm, as represented by the lines $b\,c$ and $d\,e$, Fig. 18, should always be computed

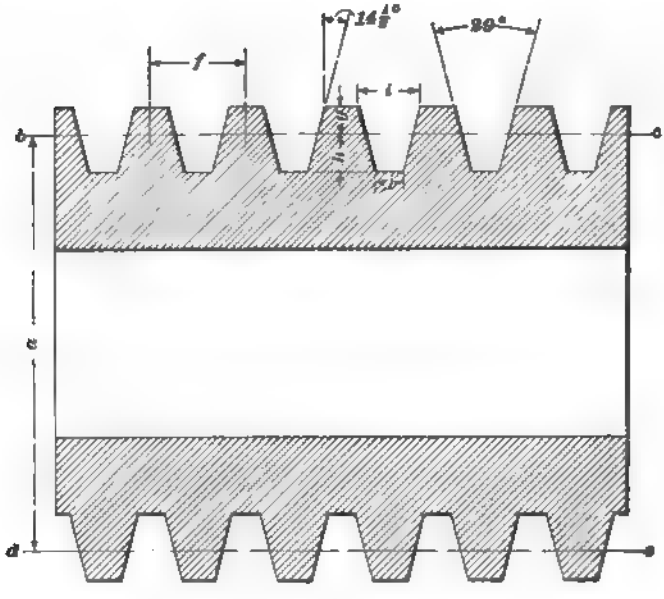

FIG. 18.

as stated in Art. **81.** When the worm-wheel has 30 or more teeth, calculate the outside diameter as follows:

Rule.—*Multiply the distance f from center to center of adjacent threads of the worm by .6366 and add the product to the pitch diameter of the worm.*

EXAMPLE.—A triple-threaded worm is to have a pitch diameter of 3 inches and a lead of thread of 1.5 inches. What should be the diameter of the blank for the worm?

SOLUTION.—Since the worm is triple-threaded, the center-to-center distance of adjacent threads is $1.5 \div 3 = .5$ inch. Applying the rule just given, we get

$$3 + .5 \times .6366 = 3.318 \text{ in.} \quad \text{Ans.}$$

83. The total depth $g + h$ of the worm-thread is equal to the depth of tooth of the worm-wheel, and is, hence, to be calculated by the rule given in Art. **79.**

84. The width i, Fig. 18, of the space between threads at the top is to be calculated as follows:

Rule.—*Multiply the center-to-center distance of adjacent threads by .665.*

EXAMPLE.—Taking the same worm as in the example in Art. **82,** what should be the width of the thread at the top?

SOLUTION.—Applying the rule, we get

$$.5 \times .665 = .333 \text{ in.} \quad \text{Ans.}$$

85. The width j, Fig. 18, of the bottom of the space between the threads is to be found as follows:

Rule.—*Multiply the center-to-center distance of adjacent threads of the worm by .31.*

EXAMPLE.—Calculate the width of the space between threads of the worm mentioned in the example given in Art. **82.**

SOLUTION.—Applying the rule just given, we get

$$.5 \times .31 = .155 \text{ in.} \quad \text{Ans.}$$

If the dimensions of the space between the threads are calculated by the rules given in Arts. **79, 84,** and **85,** the angle between the sides of the thread will be almost exactly 29°, which is the standard angle for worm-threads that has been almost universally adopted.

86. The outside diameter of a worm intended for a worm-wheel having less than 30 teeth and having a throat diameter made in accordance with the rule given in Art. **80,** and a depth of tooth made in accordance with the rule given in Art. **79,** may be calculated as follows:

Rule.—*Multiply the number of teeth of the worm-wheel by the center-to-center distance between adjacent threads of the worm, and multiply the product by .149. Subtract the last product from the center-to-center distance between the worm and worm-wheel, and multiply the remainder by 2.*

EXAMPLE. — The center-to-center distance between a worm and worm-wheel is 3 inches. The worm-wheel has 24 teeth, the worm is single-threaded with a lead of thread of .5 inch. What should be the outside diameter of the blank for the worm?

SOLUTION.—Applying the rule just given, we get

$$2 \times (3 - 24 \times .5 \times .149) = 2.424 \text{ in.} \quad \text{Ans.}$$

87. The outside diameter of the blank for the worm having been calculated by the rule given in Art. **86,** the space between the threads of the worm is to be made according to the rules given in Arts. **79, 84,** and **85.**

GEAR-CUTTING.

(PART 2.)

SYSTEMS AND PROCESSES.

SYSTEMS.

1. There are two general systems of forming gear-teeth by cutting operations, which may be called the *duplication* and the *generation* systems.

2. In the **duplication** system, the cutting tool either has a profile corresponding to the shape of the space between two gear-teeth, or it has a cutting point, or edge, that is guided by a templet. In either case, the cutting tool merely *duplicates* a tooth outline, but does not *generate* one. From this it follows that under the duplication system the correctness of the tooth curves depends primarily on the degree of accuracy within which the profile of the cutting tool or of the templet represents the true tooth curve. This consideration involves a duplication of any errors that may exist in the cutter, or a reproduction to a reduced scale of any errors of the templet.

3. The **generation** system will, in general, produce more accurate tooth curves than the duplication system. As implied by the name, the tooth curves are generated mechanically for each tooth; in consequence, the errors are very small.

Copyright, 1901, by THE COLLIERY ENGINEER COMPANY.
Entered at Stationers' Hall, London.
All rights reserved.

METHODS AND PROCESSES.

4. In each system of gear-cutting there are a number of different processes by means of which gear-teeth may be formed; the processes most commonly used are here briefly explained.

5. There are two distinct and radically different processes in the duplication system, both of which are used in practice. Incidentally, it may be remarked that at present the duplication system is the one in most general use. The two processes in that system are called the *formed-cutter process* and the *templet-planing process*.

FORMED-CUTTER PROCESS.

6. In the **formed-cutter process,** a rotary cutter (a formed milling cutter) or a planer tool having a profile equal to the space between two teeth is used for milling or planing out the spaces, thus reproducing its own profile within a reasonable limit of variation. In this process, the gear blank remains stationary while a space is being cut; that is, it does not revolve about its axis during the cutting operation. Upon the completion of each space, the blank is revolved the proper part of a revolution, which is measured or obtained by the aid of some suitable indexing mechanism. On the whole, it will be found that the best work can be done with a formed milling cutter, which not only will work faster, but, also, by reason of its numerous cutting edges and its peculiar formation, will preserve its profile much longer than the planing tool with its single cutting edge.

7. The formed-cutter process, in which a formed milling cutter is employed, is at present the one in most extensive use for the cutting of spur gears and sprocket wheels; it is also largely used for bevel gears, although, by reason of the tooth profile changing in size throughout the length of the face of a bevel gear, the formed-cutter process can, at its best, produce only an approximately correct bevel gear.

8. The use of a formed planing tool is inadvisable when conditions permit a formed milling cutter to be employed; the planing tool is convenient, however, for some work, and allows a machine like a slotter, a key seater, a shaper, or a planer to be used for work beyond the range of a milling machine or gear-cutting machine, and in isolated cases will allow gears to be cut when no machine fitted for a rotary cutter is available.

TEMPLET-PLANING PROCESS.

9. In the **templet-planing process,** a round pointed planing tool is guided by a properly shaped templet through the intervention of suitable mechanism, and copies the profile given by the templet either to the same scale or to a reduced scale. This process is chiefly used for planing the teeth of bevel gears and miter gears, and involves the use of a special machine. The teeth of spur gears and sprocket wheels can be cut with the templet-planing process, but not as fast as with the formed-cutter process.

CONJUGATE-TOOTH METHOD.

10. There is but one method of generating correct tooth curves that has come into practical use. This is called the **conjugate-tooth method,** since conjugate teeth are produced by it.

In mechanics, two gear-teeth are said to be **conjugate** when the form of the driven tooth in respect to that of the driving tooth is such that a uniform motion of the latter will produce a uniform motion of the former, i. e., when the motion is the same as that of two pitch cylinders rolling together without slipping.

11. Molding-Planing Process.—Rotary cutters or planing tools formed to the profile of a gear-tooth having the correct size may be used for generating conjugate teeth

on a gear blank. In order to form these teeth in one process, a planing tool is made in the form of a gear-wheel, and is reciprocated past the gear blank, to which it is connected in such a manner that the cutter and blank will turn together about their axes as if they were a gear and pinion meshing together. The rotation takes place when the pinion acting as a cutter is clear of the blank.

12. This process of generating conjugate teeth is technically known as the **molding-planing process;** while it is an old and fairly well-known process, it has come into practical use but very recently. Its introduction is due to the Fellows Gear Shaper Company, of Springfield, Vermont, who have succeeded in devising mechanical means of making for this purpose hardened-steel cutters with a degree of accuracy so great that the errors in the tooth curves of the cutter are practically insensible. The process is very well adapted for spur gears, sprocket wheels, and internal gears, but has at present not been extended to screw gears. It is claimed that not only will the teeth be more correctly formed by this process, but that gears can also be cut at less cost than by any other process.

13. Single-Tooth Molding-Planing Process.— There is one process of forming conjugate teeth by planing in which a single-tooth planing tool is used; from this fact it is called the **single-tooth molding-planing process.** It is used in practice for originating the tooth curves of bevel gears, and will be explained in detail farther on.

14. Molding-Milling Process.—A series of rotary cutters placed alongside each other and having a longitudinal section equal to that of a rack of the same pitch as the gear to be cut, may be used for generating gear-teeth conjugate to those of the rack whose section is represented by the cutter. Gears having different numbers of teeth thus formed will run together correctly; for, since any gears thus formed have teeth conjugate to the rack, it follows that the teeth of any two gears are also conjugate to each other. The cutters are given an axial motion equivalent

to that of a rack, and after passing clear around the gear blank are traversed a little over its face; the gear blank is positively rotated just as if it were in mesh with the generating rack, and, in consequence, gear-teeth conjugate to those of the rack are generated. This process may be called the **molding-milling process;** it has been put into practical use in a modified form by Mr. Ambrose Swasey, of the firm of Warner & Swasey, Cleveland, Ohio.

15. Hobbing Process.—There is one case of generating conjugate teeth by a rotary cutter that is in general use. This case is the making of accurate worm-wheels by hobbing; the hob is a special form of a rotary cutter, and produces teeth conjugate to those of a worm.

DUPLICATION SYSTEM.

FORMED-CUTTER PROCESS.

INTRODUCTION.

16. When a planing tool is to be used for cutting gear-teeth, the exact tooth form of opposite sides of two adjacent teeth is laid out on a piece of sheet metal, as sheet zinc, and a templet is then formed to which the planing tool is fitted.

Milling cutters for all the standard diametral pitches in use can be obtained from manufacturers making a specialty of this work. Such cutters are made by the use of special machinery, and are so accurately and cheaply made that it does not pay any one, as a general rule, to make them himself.

STANDARD CUTTERS.

17. While, correctly speaking, there should be a differently shaped cutter for every number of teeth in a gear of the same pitch, it has been shown practically that the

TABLE OF STANDARD CUTTERS.

Epicycloidal.				Involute.	
Pratt & Whitney.		Brown & Sharpe.			
Designating Mark of Cutter.	Number of Teeth of Gear.	Designating Mark of Cutter.	Number of Teeth of Gear.	Designating Mark of Cutter.	Number of Teeth of Gear.
1	12	A	12	1	135 to rack
2	13	B	13	2	55–134
3	14	C	14	3	35–54
4	15	D	15	4	26–34
5	16	E	16	5	21–25
6	17	F	17	6	17–20
7	18	G	18	7	14–16
8	19	H	19	8	12–13
9	20	I	20		
10	21–22	J	21–22		
11	23–24	K	23–24		
12	25–26	L	25–26		
13	27–29	M	27–29		
14	30–33	N	30–33		
15	34–37	O	34–37		
16	38–42	P	38–42		
17	43–49	Q	43–49		
18	50–59	R	50–59		
19	60–75	S	60–74		
20	76–99	T	75–99		
21	100–149	U	100–149		
22	150–299	V	150–249		
23	300 and over	W	250 and over		
24	Rack	X	Rack		

divergence of the tooth curves is so gradual that one cutter may be made to answer for several numbers of teeth without introducing any serious error.

In the cycloidal system of gearing there are 24 cutters in a set for each diametral pitch. Incidentally, it may be remarked that the cycloidal system is commonly miscalled the *epicycloidal* system; in fact, all manufacturers stamp cutters intended for the cycloidal tooth form "Epicycloidal," and refer to them by that name. In the involute system of gearing there are 8 cutters in a set. A set of cutters comprises all the cutters required for gears above 12 teeth up to and including the rack, and will cut gears that are interchangeable. The different cutters of each set are designated by the different makers by letters or figures; the accompanying Table of Standard Cutters gives the designating marks and the number of teeth of the gear for which the cutter can be used. For instance, by referring to the table it is seen that a number 21 Pratt & Whitney epicycloidal cutter is intended for gears having from 100 to 149 teeth, inclusive of both numbers, and a Brown & Sharpe epicycloidal cutter designated by the letter S is intended for gears having from 60 to 74 teeth, inclusive of both. Likewise, a number 2 involute cutter is intended for gears having between 55 and 134 teeth, inclusive of both.

STANDARD PITCHES.

18. The standard diametral pitches that Pratt & Whitney make epicycloidal cutters for are as follows: $1\frac{1}{2}$, 2, $2\frac{1}{2}$, 3, $3\frac{1}{2}$, 4, 5, 6, 7, 8, 9, 10.

The standard diametral pitches that Brown & Sharpe make epicycloidal cutters for are as follows: 3, 4, 5, 6, 8, 10.

On a special order, Brown & Sharpe furnish the following pitches for epicycloidal cutters: 2, $2\frac{1}{4}$, $2\frac{1}{2}$, $2\frac{3}{4}$, $3\frac{1}{2}$, 7, 9, 12, 14, 16.

Involute cutters can be obtained on regular order for the

following diametral pitches: 3, 4, 5, 6, 7, 8, 9, 10, 11, 12, 14, 16, 18, 20, 22, 24, 26, 28, 30, 32, 36, 40, 48.

On special order, Brown & Sharpe will furnish involute cutters for the following diametral pitches: 2, 2¼, 2½, 2¾, 3¼, 3½, 3¾, 4½, 5½, 13, 15, 38, 44, 50, 56, 60, 64, 70, 80, 120.

Cutters for other pitches can usually be furnished by manufacturers to order, but naturally only at an advance in price. Neither epicycloidal nor involute cutters are regularly in the market for gears designed on the circular-pitch system; such cutters can be obtained only on special order at a proportionate advance in price.

DEPTH OF CUT.

19. Calculating the Depth.—The correct depth of cut for standard epicycloidal and involute cutters made according to the Brown & Sharpe system is calculated as follows:

Rule.—*Divide 2.157 by the diametral pitch.*

EXAMPLE.—Find the proper depth of cut for a 2-pitch Brown & Sharpe cutter.

SOLUTION.—Applying the rule just given, we get

$$\frac{2.157}{2} = 1.078 \text{ in., nearly.} \quad \text{Ans.}$$

20. For epicycloidal cutters made by Pratt & Whitney, the correct depth of cut is obtained as follows:

Rule.—*Divide 2.125 by the diametral pitch.*

EXAMPLE.—Find the depth of cut of a standard 6-pitch Pratt & Whitney epicycloidal cutter.

SOLUTION.—Applying the rule just given, we have

$$\frac{2.125}{6} = .354 \text{ in., nearly.} \quad \text{Ans.}$$

21. Setting Cutter for Depth.—The cutter may be set to the correct depth by observing the indication of the

graduated dials on the feed-screws. If the gear blank has been turned to the correct size, the cutter is first set to touch the blank; it is then run clear of the blank and the axes of the cutter and blank are brought together an amount equal to the calculated depth of cut. When the gear blank is under size, one-half of the difference between the true diameter and the actual diameter should be subtracted from the calculated depth of cut; the remainder will be the depth to which the cutter is to be set. If the gear blank is over size, it should be turned down.

22. Gear-Tooth-Depth Gauge.—When the blank has been turned to the *correct size*, a **gear-tooth-depth gauge** may be used for marking the correct depth of cut on the blank. Such a gauge is shown in Fig. 1. It has at one end a rectangular slot, the width of which is made equal to the depth of cut for the diametral pitch the gauge is intended for. The point *a* is hardened and is used for scribing a line representing the correct depth of tooth on the blank, by applying the gauge as shown in the illustration and observing the precaution of holding it radially during the scribing. The cutter is then sunk into the blank to the depth indicated by the scribed line.

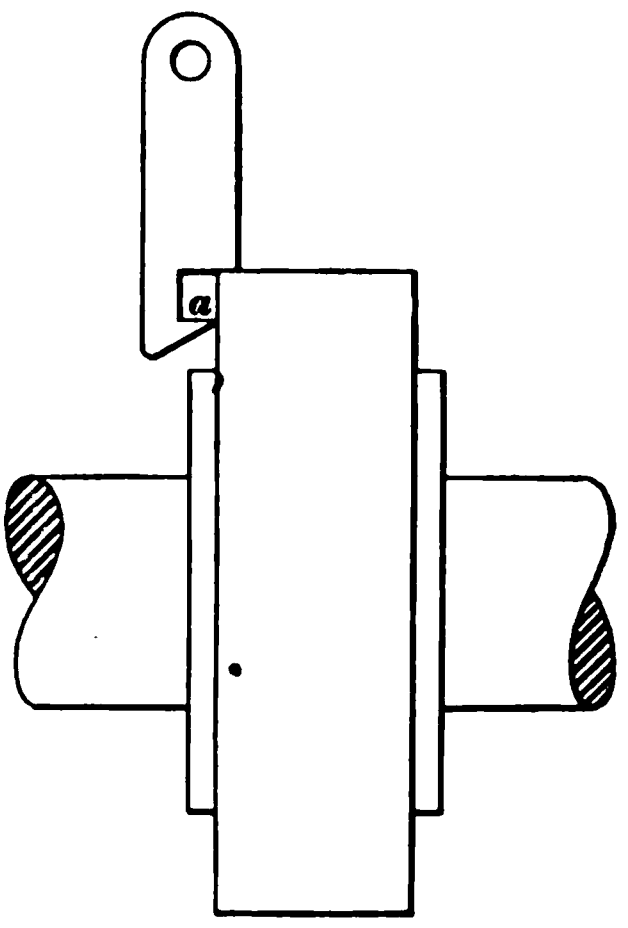

FIG. 1.

GANG CUTTERS.

23. Two or more specially shaped cutters may be placed alongside each other at a distance equal to the pitch, and [illegible] be used for cutting the teeth in the same manner as

ordinary single cutters. When several cutters are thus placed, they are called **gang cutters.** They may be divided into two classes, which are. (*a*) Gang cutters that finish teeth to an approximate shape; (*b*) gang cutters that finish teeth to exact shape.

24. The **Clough duplex cutter** belongs to the first class, since one gang of two cutters made as shown in Fig. 2 (*a*) is used for all gears of the same pitch For gears of more than 30 teeth, the teeth are finished entirely by the inside faces of the cutters, as shown in Fig 2 (*b*) at *a*; gears having a smaller number of teeth have the flanks of the teeth finished by the outside faces of the cutters, and the faces of

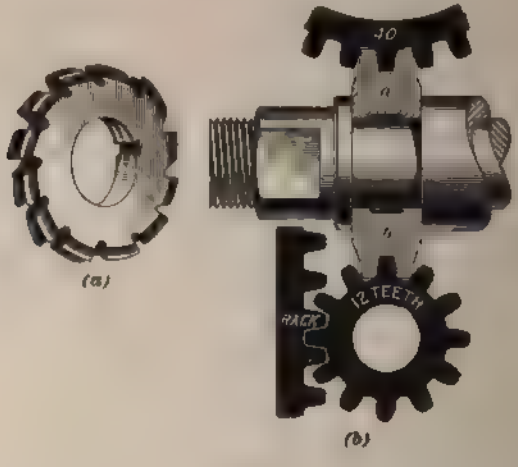

FIG. 2.

the teeth by the inside faces of the cutters, as shown at *b* in the same figure. Gears cut with these cutters will have approximately involute teeth, and different gears cut by the same cutter will run together fairly well. Their motion obviously cannot be as exact as that of wheels cut by a correct single cutter These duplex cutters are laid out in such a manner that the wheels cut by them will mesh and run with gears cut with regular involute standard cutters.

25. The **Gould & Eberhardt gang cutter** is an example of a cutter belonging to the second class. If the teeth of a gear-wheel be examined, it will be found that usually several of them can be cut at once if the cutter is shaped to conform to the tooth outlines. Thus, in Fig. 3, the cutter a conforms to the space a'; the cutter b conforms to the space b', and as its central plane perpendicular to its axis of rotation passes through the axis of the gear, it is a standard cutter. Finally, the cutter c conforms to the space c'. By employing three gang cutters thus formed, three teeth can be cut at a time, and, hence, the indexing would be done for three teeth instead of one. In consequence of this, a gear can be cut in less time than is required for cutting it with a single cutter, but owing to the increased heating it cannot be cut in one-third of the time. Since such gang cutters can have the correct shape for only one size of a gear, it follows that a separate gang is required for each size.

FIG 3

The Gould & Eberhardt gang cutter is intended primarily for manufacturing—that is, making a large number of equal gears—and in its special field is obviously far ahead of the ordinary single cutter. The large number of gangs required to cover the whole range of gears of each pitch makes it rather unsuitable for jobbing work.

MACHINERY AND ATTACHMENTS.

26. In the formed-cutter process, where a milling cutter is used, the gear may be cut either in a plain milling machine fitted with a suitable indexing attachment, or in a universal milling machine, or in a regular gear-cutting engine.

27. Gear-Cutting Attachment.—The simplest form of gear-cutting attachment does not differ in principle from that of the plain index centers, except that the index plate has only one row of holes and thus a rather limited range of usefulness. Other attachments have a large index plate and a number of different rows of holes so as to extend their range of usefulness. Sometimes a still more elaborate device, like that shown in Fig. 4, is employed. In this the gear blank is mounted on a mandrel and placed between the centers *a* and *b*, or it may be mounted upon an arbor placed in the spindle in place of the center *a*. Inside of the guard *c* there is a worm-wheel which is operated by a worm on the shaft *f*, and the indexing is done by means of an index plate *d*. The device is

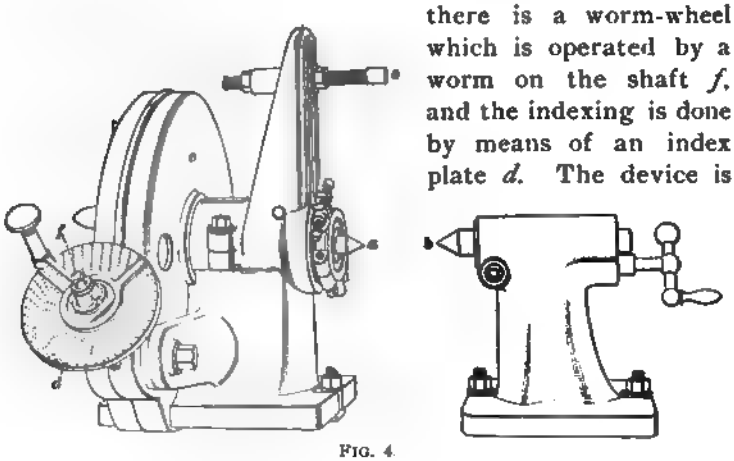

FIG. 4

so arranged that the worm upon the shaft can be disengaged from the worm-wheel in the case *c*, the worm-wheel rotated by hand, and a plain index pin used in the holes in the back of the plate. The attachment shown can ordinarily be used only for spur gears and sprocket wheels; when fitted to a universal milling machine, it can also be used for gashing worm-wheels.

28. When a universal milling machine is available, spur gears, worm-gears, sprocket wheels, screw gears, and bevel gears can be cut; but bevel gears can be cut only approximately correct.

29. Gear-Cutting Engine.—A regular spur gear-cutting engine is only a special form of a milling machine,

and differs from it chiefly in that, as a general rule, the indexing and also the running back of the cutter is done automatically.

Fig. 5 shows one form of an automatic spur gear-cutting engine built by Gould & Eberhardt, Newark, New Jersey. The gear blank is fastened in some suitable manner to the spindle *a*; generally, an arbor is used, which, in the design shown, is supported at its outer end by the adjustable

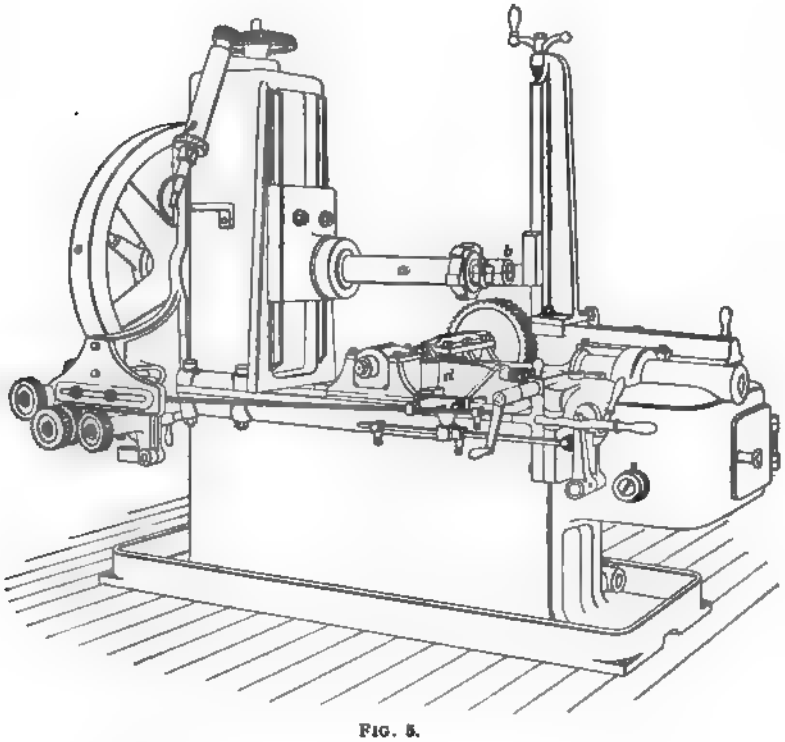

FIG. 5.

outboard bearing *b*. Upon the spindle is fastened a worm-wheel that is enclosed in a guard *c* in order to protect it; a worm meshes with the worm-wheel and is in turn operated by change gears that revolve it a definite part of a revolution each time the cutter is clear of the gear blank and before it begins to cut. The cutter is carried in a

slide *d* that is moved parallel to the axis of the spindle *a*, and is fed automatically to the work and returned. The cutter is adjusted for depth by lowering the gear blank. A limited side adjustment is usually provided for the cutter to allow cutters of different thicknesses to be set central.

30. Automatic gear-cutting engines are often arranged so that they can be used for cutting approximately correct bevel gears. The slide that carries the cutter is then arranged in such a manner that it can be set at the required angle to the axis of the spindle.

31. Change Gearing.—The gearing that revolves the shaft carrying the worm is, as a general rule, actuated by a so-called **stop-shaft,** which is provided with a suitable clutching mechanism operated by the cutter slide. This clutching mechanism is so arranged that it allows the stop-shaft to make exactly one revolution whenever the returning cutter slide unlocks it. The change gears that will produce a certain number of divisions are selected in accordance with the ratio $\frac{\text{teeth in worm-wheel}}{\text{teeth to be cut}}$. In case of simple gearing, this is the simple ratio that gears are to be selected for; in case of compound gearing, it is the compound ratio, which is resolved into factors. The gears are selected in the same manner as is done in gearing a lathe for thread cutting or a milling machine for the cutting of helixes.

In adjusting the gear-cutting engine, the tripping arrangement for the stop-shaft clutching mechanism must be set so that it will act only after the cutter on its return stroke is entirely clear of the gear.

CUTTING BEVEL GEARS WITH FORMED CUTTERS.

32. Selecting the Cutter.—While bevel gears cut with a cutter of fixed curve can be only approximately correct, the comparative cheapness of this method has led to its being largely used. The ordinary cutters made for spur

wheels should never be used for this purpose, as they will cut the teeth of the bevel gear entirely too thin at the small end. Special miter-gear and bevel-gear cutters are made for this purpose; these cutters are of the involute form, but thinner than the standard cutters. They are numbered from 1 to 8, and cover the same range as the standard involute cutters. A bevel-gear cutter cannot be selected in the same manner as the ordinary spur-gear cutter, that is, directly in accordance with the number of teeth of the bevel gear. It is to be selected, instead, for a number of teeth that is calculated by one of the rules given below, the first of which is as follows:

Rule.—*To find the number of teeth a bevel-gear cutter is to be selected for, divide the number of teeth of the bevel gear by the natural cosine of the center angle a d e, Fig. 6.*

EXAMPLE. — The center angle of a bevel gear having 24 teeth is 53° 15′. What number of teeth should the cutter be selected for?

SOLUTION.—The cosine of 53° 15′ is .59832. Applying the rule, we get $\frac{24}{.59832} = 40$ teeth. Referring to the Table of Standard Cutters, we find that for gears having between 35 and 54 teeth, a No. 3 cutter is to be used. Hence, use a No. 3 bevel-gear cutter. Ans.

33. When a drawing of the bevel gear is available, use the following rule:

Rule.—*Measure the slant height of the back cone, as a b in Fig. 6; double it and multiply by the diametral pitch. The product will be the number of teeth the cutter is to be selected for.*

EXAMPLE.—The slant height of the back cone being 5 inches, and the diametral pitch being 4, what number of bevel-gear cutter is to be used?

SOLUTION.—Applying the rule just given, we get $5 \times 2 \times 4 = 40$ teeth. Referring to the Table of Standard Cutters, it is seen that a No. 3 bevel-gear cutter is to be used. Ans.

34. Setting the Machine.—The cutter having been selected, place it on its arbor; put the gear blank into the

machine, and set the latter to the cutting angle. Now, set the cutter central in respect to the gear blank; then set it to the correct depth of cut, measuring at the large end of the blank, and cut two adjacent tooth spaces, as *b* and *c* in Fig. 7, which leaves the tooth *a* rather too thick. Set the cutter off center an amount equal to about $\frac{1}{7}$, the thickness of the tooth *a* at the large end. Now, revolve the gear blank toward the cutter until the latter will enter one of the central cuts *b* or *c* at the small end of the gear and cut the one side of the tooth *a*. Next, set the cutter off center to the other side of the center by the same amount and roll the blank toward the cutter again until it enters the other central slot at the small end. Take the cut, and measure the thickness of the tooth *a* at the pitch line at the large end. If its thickness is more than the quotient

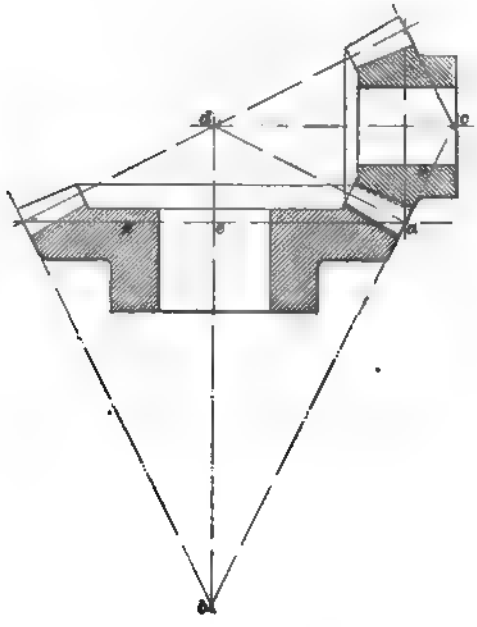

FIG. 6.

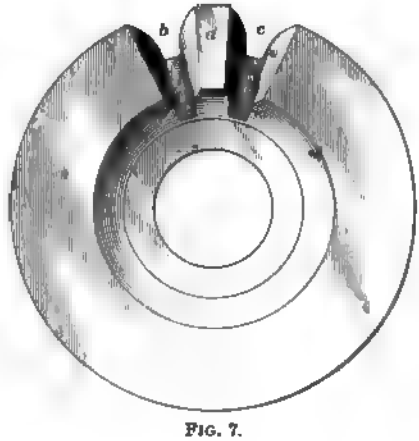

FIG. 7.

obtained by dividing the circumference of the pitch circle by twice the number of teeth, it shows that the cutter must be set farther off center. This having been done, the blank is rolled toward the cutter and both sides of the tooth *a* are cut again, and the cycle of operations is repeated until the tooth is of the correct thickness at the large end. The gear blank can now be cut, first setting the cutter off center one way the amount determined by trial and cutting all around the gear, and then setting it off center the other way and going around once more.

35. The method given in Arts. **32, 33,** and **34** will answer fairly well for teeth that are shorter than $\frac{1}{3}$ the slant height of the pitch cone; it will leave the teeth correct at the large end, but not rounding enough at the small end. The teeth must consequently be dressed with a file.

36. Gear-Tooth Caliper.—A good form of a caliper for measuring the thickness of the gear-teeth is shown in Fig. 8. The vertical slide *a* is first set until the reading of

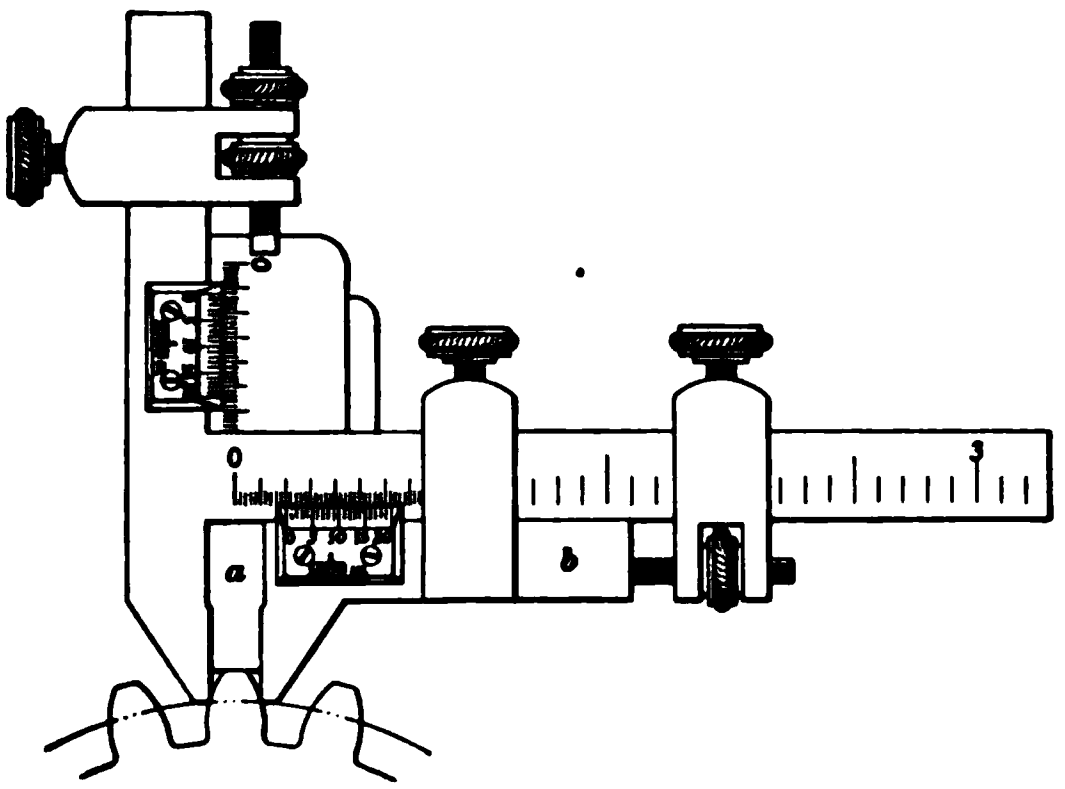

FIG. 8.

its vernier is equal to the calculated addendum of the tooth; the caliper is then applied to the gear with the slide *a* resting on top of a gear-tooth, as shown, and the horizontal jaw *b* is

brought against the tooth. The thickness of the tooth is read on the horizontal vernier.

37. General Instructions.—When miter gears are cut, both gears of a pair are cut with the same cutter; when bevel gears are cut, the proper number of the cutter should be computed for each by the rules previously given. If the cutting is done in a machine where the angle between the axis of the index-head spindle and the axis of the cutter spindle can be changed, the angle should be made 90° before beginning to set the machine. This gear-tooth caliper does not give good results when applied to the teeth of small pinions unless care is taken to see that the points of the jaws are in contact with the pitch points of the teeth. This may necessitate the setting of the vertical scale to a greater distance than the addendum.

RACK CUTTING.

38. A rack may be cut either with a planing tool or a milling cutter shaped to conform to the rack teeth. The pitch of the rack is equal to the pitch of the spur gear meshing with it, and since cut spur gears are made almost entirely to the diametral-pitch system, the circular pitch must usually be computed from it to obtain the spacing.

39. Short racks can readily be cut in the horizontal milling machine, using the cross-feed screw to obtain the spacing and the regular longitudinal-feed screw for feeding. The rack blank may either be clamped to the table or be held in the vise or in a special fixture.

40. Racks that are too long to be cut in this manner can be cut by means of a special rack-cutting attachment, one form of which is shown in Fig. 9. The cutter *a* is placed at right angles to its normal position; this allows the feed-screw *b* to be used for spacing the teeth and the cross-feed screw for feeding. A graduated dial *c* reading to .001 inch is placed on the feed-screw, and the correct

spacing is obtained by means of it. The rack may be placed in a fixture *d* made as shown, which will take several racks at one time.

41. When racks are cut in the milling machine, it is strongly recommended that the gibs of the part that is moved in order to obtain the spacing be set up more firmly than usual in order to create enough friction to prevent any shifting, which is liable to occur by reason of the back lash of the feed-screw.

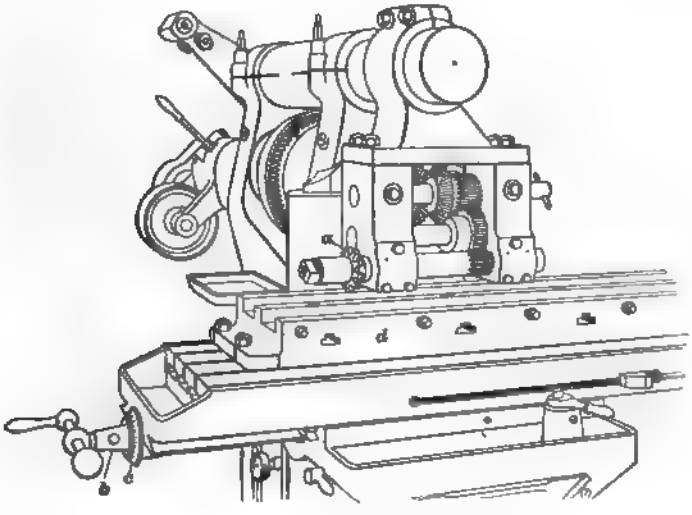

FIG. 9.

Racks are often cut in milling machines of the planer type; in that case, the spacing is obtained by means of the feed-screw in the cross-rail. The head should then have its gibs set up rather firmly. The rack is placed square across the platen.

A planing tool formed to the correct shape may be used in a planer, shaper, or slotter, obtaining the spacing by means of whatever feed-screw can be used for the purpose.

TEMPLET-PLANING PROCESS.

42. The Machine.—The principle of operation of a templet-planing machine intended for planing the teeth of bevel gears is shown in diagrammatic form in Fig. 10. The gear blank *a* is attached to the index spindle *b*, which carries an indexing wheel *c* at its other end. An arm *d* supports a longitudinally movable slide *e* which carries the pointed cutting tool *f*. The arm *d* is mounted on a universal joint in such a manner that its center of rotation *g* coincides with the axis of rotation of the gear blank. The

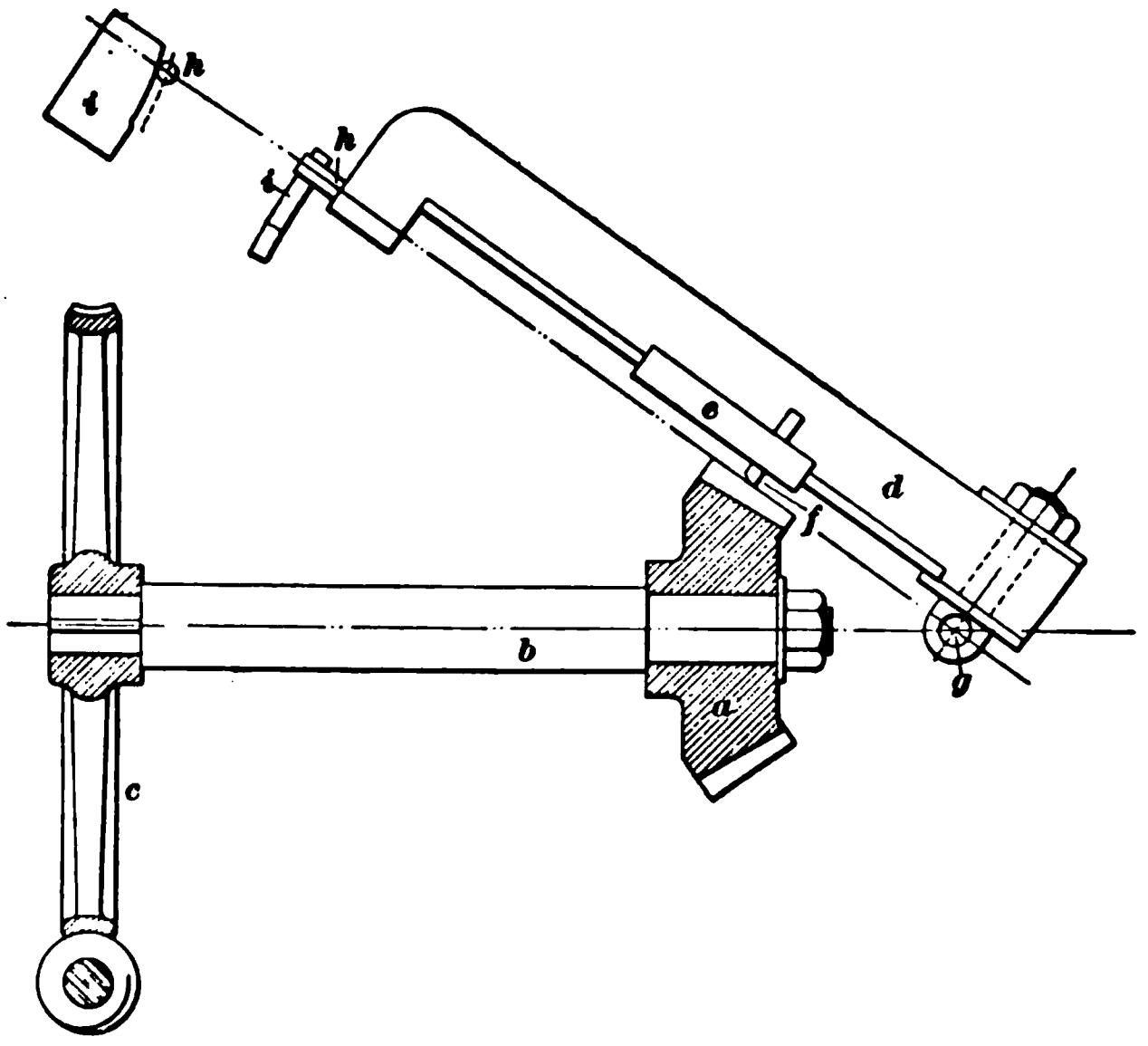

FIG. 10.

cutting tool is adjusted in the slide *e* in such a manner that the line of motion of its cutting point passes exactly through the center of rotation of the arm. A pin *h* is fastened to the free end of the arm, and is in contact with a templet *i*, which is shaped to conform to a correct tooth curve for the number of teeth contained in the bevel gear.

The arm *d* remains stationary while the cutting tool is traversed through the gear blank. One side of a tooth is finished at a time by successive cuts converging toward the apex of the pitch cone, which point, by reason of the construction of the machine, is also the center of rotation *g* of the arm. After the tool *f* has cleared the blank on its return stroke, the arm is moved slightly along the templet *i*, keeping the pin *h* in contact with the templet; the position of the arm and, hence, the formation of the tooth curves, is thus determined by the templet. The form of the templet is reproduced on a smaller scale by the planing tool on the tooth operated on, and any errors existing in the templet are reduced.

43. It is obvious that a different templet will be required for each number of teeth, at least theoretically. Owing to the small divergence in the shape of the tooth curves, one templet can be made to serve for several gears, however, just as is done with formed gear-cutters. One templet will answer for all pitches within the range of the machine; different sizes of bevel gears are cut by varying the distance from the gear to the center of rotation of the arm *d*. In an actual machine, the templet is movably mounted on a quadrant having its center of curvature at *g*; this adapts the machine for different gears, since it allows the angle between the axis of the spindle and the line of motion of the tool to be changed to suit the number of teeth of the gear.

44. Templet-Grinding Process.—A modification of the templet-planing process has recently been perfected by the Leland & Faulconer Company, Detroit, Michigan, who have substituted a corundum wheel for the planing tool and thus are enabled to finish the teeth of hardened-steel bevel gears to a correct shape. The fundamental principle underlying this **templet-grinding** process does not differ in any essential particular from that explained in connection with Fig. 10.

GENERATION SYSTEM.

CONJUGATE-TOOTH METHOD.

MOLDING PROCESS.

45. The different processes employed in the conjugate-tooth method of generating gear-teeth are all based on the so-called **molding process,** which has not been put into practical use, however, at least not to any extent. This process may be explained as follows: Let a correctly formed rack made of some hard material, as steel, be passed over a gear blank made of a plastic material, as beeswax, while the blank is given a positive rotation that imparts to it at the pitch circle a velocity equal to that of the rack. Then, the pitch line of the rack and the pitch circle of the blank being tangent, the teeth of the rack will mold teeth in the blank that are conjugate to its own.

MOLDING-PLANING PROCESS.

46. Principle of Operation.—Since the materials of which gear-wheels are constructed are not plastic, the molding process cannot be employed very readily, but the same effect can be produced by transforming the generating rack into a cutting tool that reciprocates across the blank in the direction of the axis of the latter. The cutting tool does not advance during its *cutting stroke* in a line tangent to the pitch circle of the blank and at right angles to the axis of the latter; but, after the tool has cleared the blank on its return stroke, the tool and the gear blank are given a slight motion equivalent to that of a meshing rack and pinion and the tool is reciprocated through the blank again. This cycle of operations is repeated until the gear blank has been transformed into a gear. The molding process thus becomes the

molding-planing process; in execution, however, this process is modified for practical reasons, the chief of which are the great length of rack required and the difficulty of making it.

47. Fellows Gear-Shaper.—In the **Fellows gear-shaper,** in which machine the molding-planing process is employed, the cutter a, Fig. 11, is made in the form of a gear. The process by which the cutter is generated is equivalent to its generation by an involute rack, and it is

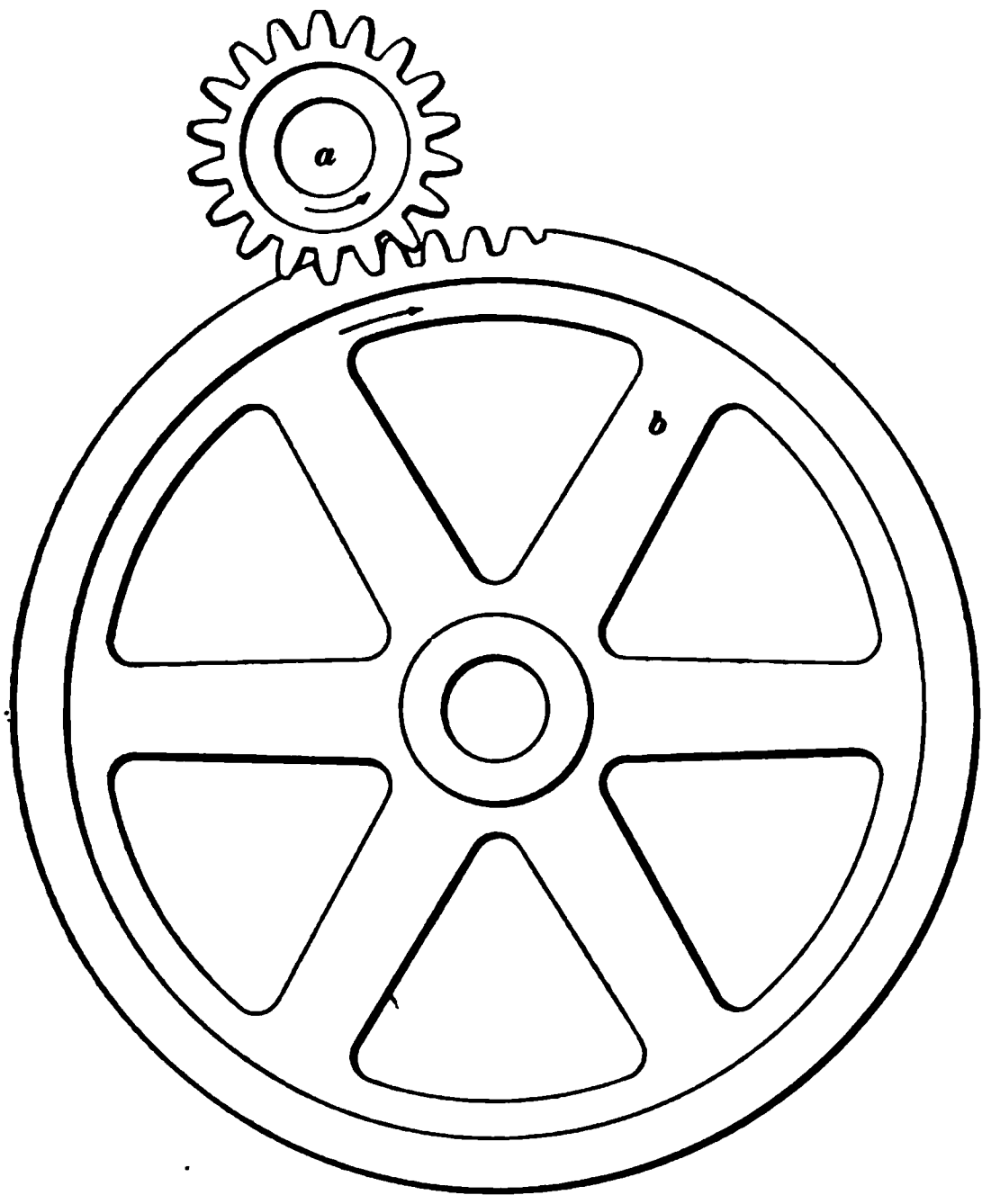

FIG. 11.

given teeth conjugate to those of the generating rack. In consequence of the method by which the cutter is formed, the teeth of all gears cut by it are conjugate to the rack and hence to one another; that is, the different gears will run together correctly.

In use, the cutter *a* is drawn axially across the face of the blank *b* and cuts grooves corresponding to the shape of its teeth. In beginning to cut a gear, the blank and cutter do not revolve, but the center-to-center distance between the cutter and the gear blank is shortened after each return stroke of the cutter until the correct depth of cut is reached. The cutter and the gear blank are then rotated a little by positive means after each return stroke in the direction shown by the arrows; their relative rotations are exactly the same as if two gears equal in size to the cutter and gear to be cut were rolling together. Conjugate teeth are thus generated, and one cutter will cut all gears from a pinion to a rack.

48. The machine used is shown in Fig. 12. The cutter *a* is carried on the end of a ram that is free to slide in a vertical direction and can be rotated about the cutter axis. This ram is carried in a head *b*, which is gibbed to ways formed on the frame and is movable horizontally to suit different diameters of gears and different depths of cut. The gear blanks *c*, *c* are mounted on a vertical spindle parallel to the line of motion of the ram. The lower end of the spindle that receives the blank carries a worm-wheel enclosed in the guard *d*; a worm meshes with this wheel and in turn is connected to change gearing that connects the ram and the spindle by a suitable mechanism and forces them to rotate together. Different velocity ratios are obtained by changing the change gears. The ram, sliding axially in its bearings, is reciprocated across the face of the blank. The gear blank is supported against the cut by an adjustable jack *e*. Ordinarily, the cut taken is a draw cut, the cutter being drawn across the face of the blank; the machine can readily be used, however, for pushing the cutter across the blank. The stroke of the ram is adjustable for length and position.

49. Internal gears can be cut with the same ease as spur gears by means of this machine, and the cutter will automatically produce teeth conjugate to itself and to any

spur gear cut by the same cutter. Sprocket wheels can also be cut by using a suitably formed cutter.

50. The cutter, at a casual glance, would be taken for a spur gear, but in reality it is a bevel gear having a very small center angle. As is well known, any planing tool must have clearance in order to cut; this cutter is no exception to the general rule, and is given clearance by making it

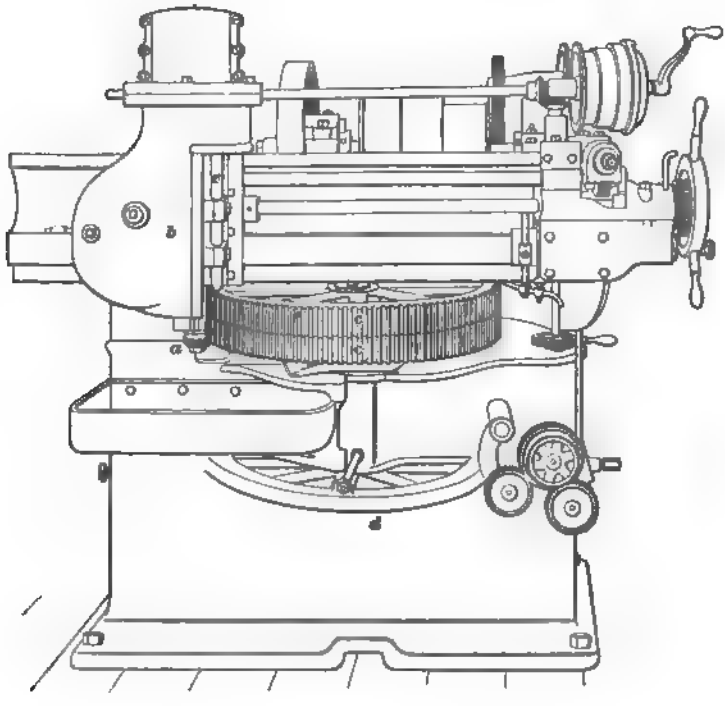

FIG. 12.

like a bevel gear. It is sharpened by grinding its top face in a special grinding machine; while it is true that this grinding will change the pitch of the cutter, the fact remains that, owing to the small center angle, the reduction in pitch will be so extremely small as to be negligible for all practical purposes.

SINGLE-TOOTH MOLDING-PLANING PROCESS.

51. Development of the Process. — As previously explained, in the molding process the teeth of a gear are formed by running a rack over the gear blank, as is shown in Fig. 13 (*a*). It is readily seen that this operation may be

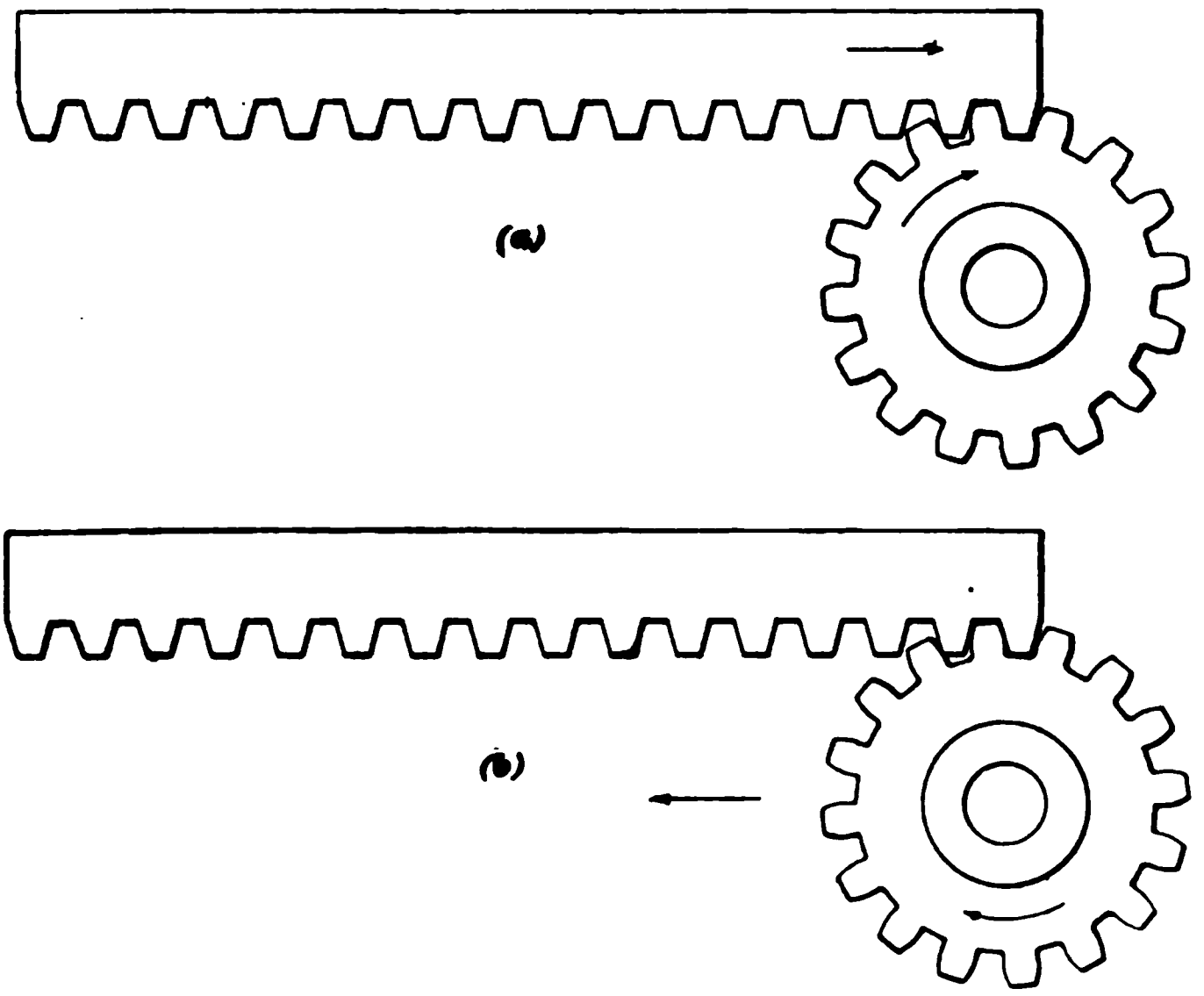

FIG. 13.

reversed; that is, the rack may remain stationary and the gear blank may be rolled along it in order that teeth conjugate to those of the rack may be generated. This is shown in Fig. 13 (*b*).

52. The rack may be replaced by a single stationary tooth, as illustrated in Fig. 14; then, if the gear blank is rolled past this tooth with a motion equivalent to that of a pinion rolling in a rack, the single tooth will mold opposite sides of two future adjacent teeth to a form conjugate to its own. Fig. 14 (*a*) shows the position of the molding tooth when it first engages the gear blank, which is rolled in the direction of the arrow *x* and, consequently, advances along the straight line *a b* in the direction of the arrow *y*. In

Fig. 14 (*b*), the blank has been rolled into the position shown, its original position being given by the dotted circle *c*. The center *d* of the gear blank is here perpendicularly below the molding tooth, and the face of one tooth and the flank of another have been fully formed. In Fig. 14 (*c*), the blank has been rolled forwards until the

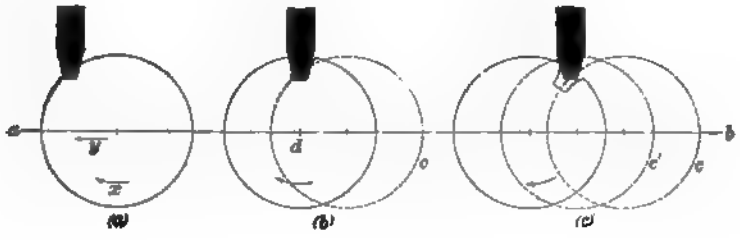

FIG. 14.

molding tooth is about to leave the blank, and the opposite faces of two future adjacent teeth have been fully formed; that is, one space has been molded. In order to show the rotation and advance of the blank more clearly, several of its different positions are given; the dotted circle *c* represents the position occupied in Fig. 14 (*a*), and the dotted circle *c'* gives the position shown in Fig. 14 (*b*).

53. Since a single-tooth molding tool can finish only one space at a time, it follows that after each passage of the tool, the blank must be rotated by a suitable indexing mechanism through an angle corresponding to one tooth.

54. The single molding tooth may be made in the form of a planer tool and may then be given a reciprocating motion across the face of the blank; after it has cleared the blank on the return stroke, the blank may be revolved and advanced forwards a little and the tool be reciprocated through it again This cycle of operations being repeated until the tool does not engage the blank any more, the opposite sides of two future adjacent teeth are thus formed by successive cuts to be conjugate to the gear-tooth represented by the planing tool.

55. The single-tooth molding-planing process just explained forms the basis of a mechanical method of correctly generating the teeth of bevel gears that are conjugate to those of a **circular rack,** which is often called a **crown gear.** The principle underlying this method may be explained as follows: When a spur gear rolls in a rack, its action is equivalent to that of the pitch cylinder rolling without slipping on the pitch plane of a rack, and the path

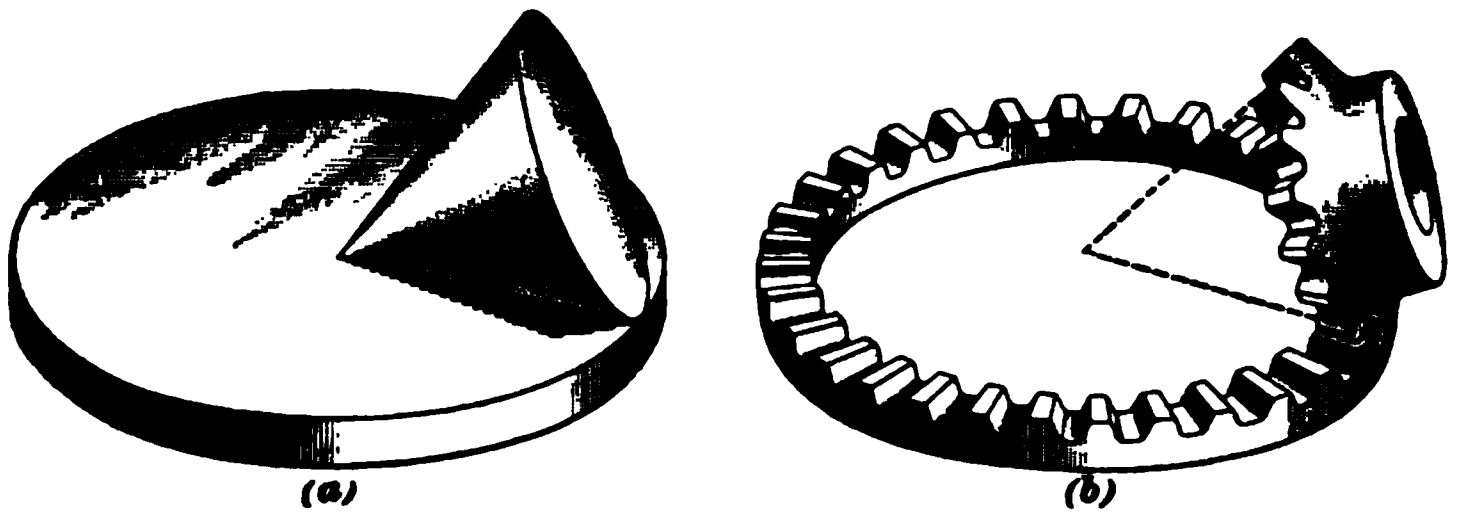

FIG. 15.

of the pitch cylinder will be represented by a straight line. In a bevel gear we have a *pitch cone* instead of the *pitch cylinder* of the spur gear; such a cone in rolling without slipping on a plane surface will follow a circular path, and the apex of the cone will coincide with the center of the circle representing the path, as is shown in Fig. 15 (*a*). From this it follows that the rack for a bevel gear must be circular, as is shown in Fig. 15 (*b*).

56. Obviously, a circular rack may be used for molding the teeth of a bevel gear in the same manner in which a straight rack may be employed for generating the teeth of a spur gear, rolling the bevel-gear blank along the circular rack just as the pitch cone in Fig. 15 (*a*) would roll without slipping on the plane surface representing the pitch plane of the rack. As was explained in connection with spur gears, the rack may be replaced by a single tooth; when transforming the molding tooth into a planing tool, however, we are immediately confronted with the fact that the pitch of the tooth, and, hence, the width of the space

between two teeth of a circular rack, changes throughout the length of the tooth. This fact precludes the possibility of planing opposite sides of adjacent teeth in one cut.

57. A careful investigation by various authorities has shown that, in a circular rack, neither the involute nor the epicycloidal form of tooth can be planed with a *formed* planing tool, on account of the fact that in such a rack these tooth curves, although remaining symmetrical, change in extent throughout the length of the tooth. It was discovered by Mr. Geo. B. Grant, however, that a circular rack having its teeth planed one side at a time with a formed tool given the shape of an involute straight-rack tooth, would form the basis of a new system of bevel-gear teeth whose sides in the circular rack are plane surfaces, and to which he has given the name of **octoidal teeth.**

58. The octoidal bevel-gear tooth (a circular rack is here considered as a special form of a bevel gear) being formed by a tool having the shape of an involute straight-rack tooth, it naturally has the same general form as the true involute bevel-gear tooth, and, hence, has been, and is yet, confounded with it by many writers on the subject of gear-cutting.

59. Since a circular rack may generate teeth conjugate to its own by molding, it is a logical conclusion that the molding process may be replaced by the molding-planing process, as is done in the case of spur gears generated by a straight rack. Instead of planing parallel to the axis of a pitch cylinder, however, the planing of a bevel gear must be done toward the apex of its pitch cone, and the planing tool must move parallel to the bottom of the teeth, as is done in planing the crown gear.

60. The planing tool is, in practice, made slightly narrower than the width of the space between teeth at their smaller end; it is then reciprocated through the gear blank in the same direction that the sides of the teeth of a circular rack occupy; that is, radially toward the center of the rack

and, hence, toward the apex of the pitch cone. After each cut, the gear blank is given a motion equivalent to that of its pitch cone rolling on the pitch plane of a circular rack; by successive rollings of the blank and passages of the cutting tool through it, one side of one tooth is made conjugate to the side of the tooth of a circular octoidal rack. By suitable indexing and a repetition of the forming operation for the opposite side of each tooth, a correct octoidal bevel gear is cut that has teeth conjugate to those of the corresponding circular rack; consequently, both bevel gears of a pair thus cut have teeth that are conjugate to one another, and, hence, will run together correctly.

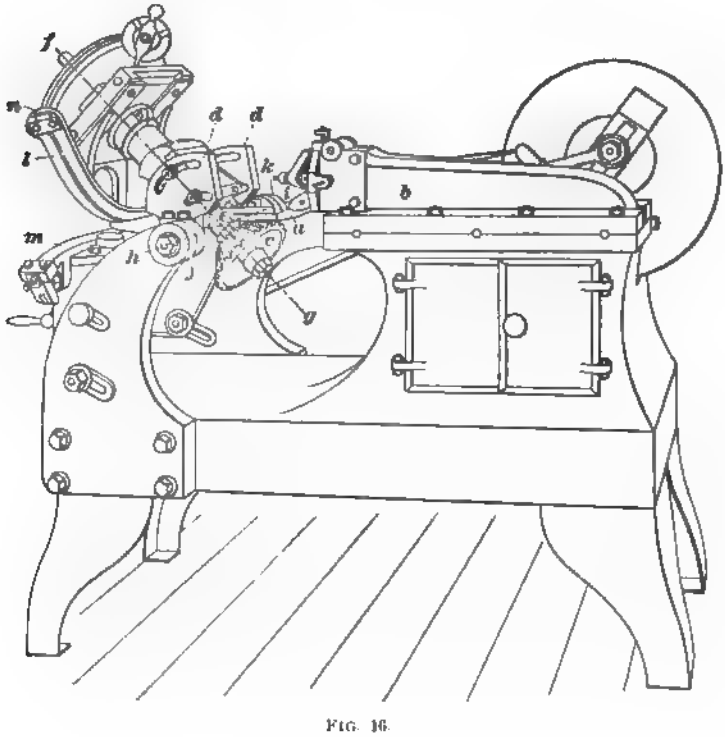

FIG. 16.

61. Bilgram Bevel-Gear Cutter.—The method of generating conjugate bevel-gear teeth that has been just

explained is employed in the **Bilgram bevel-gear-cutting machine** shown in perspective in Fig. 16. In this machine, the planing tool *a*, which is formed to conform to the sides of the teeth of a circular involute rack, is held in the tool post of a crank-driven ram *b* that reciprocates in suitable guides formed in the frame of the machine. The tool post is set into a clapper similar to that of a planer head, in order to allow the tool to swing away from the work on the return stroke.

62. The gear blank receives a rolling motion from a very interesting piece of mechanism. The gear blank *c* is mounted upon a spindle *e*. The axis *f g* of the spindle *e* intersects an axis *h i* passing through the bearings *j* and *k*. The piece *n* is made in the form of a portion of a conical surface, the apex of the cone being at the intersection of the axes *f g* and *h i*. About this conical surface two bands *l* and *m* are arranged so that as the portion of the machine carrying the axis *f g* is swung backwards and forwards the bands *l* and *m* will cause the spindle *e* to rotate about the point where the axes *f g* and *h i* intersect. By properly adjusting the gear *c*, so that the tool *a* travels in the direction of the bottom of the gear teeth, the machine will be so set that the rotating of the conical surface *n* will cause the gear *c* to rotate as though it were in contact with a gear tooth represented by the tool *a*.

63. The machine is provided with such adjustments that the gear blank *c* can always be brought into the proper relation to the cutting tool *a*, without the necessity of having the piece *n* constructed as a cone having the same central angle, the only requirement being that the conical piece *n* shall give the axis *f g* the proper rotation about the intersection of the two axes *f g* and *h i*. The effect of the motion is the same as if the bevel gear *c* were rolling upon a circular rack, one tooth of which is represented by the cutting tool *a*. A suitable indexing mechanism spaces the teeth correctly and an automatic feed mechanism rolls the blank slightly after each return tooth of the forming tool *a*.

MOLDING-MILLING PROCESS.

64. Principle of Operation.—The principle of operation underlying the molding-milling process is illustrated by the aid of Fig. 17. A series of equal cutters *a*, *a*, the profile of each of which is the same as that of a rack tooth, are placed alongside one another on a mandrel and at a distance from one another equal to the circular pitch, so that a longitudinal section taken through all the cutters shall have the outline of the teeth of a rack. The number of cutters is made equal to the number of teeth the proposed gear is to have. The gear blank *b* is mounted on an arbor at right angles to the axis of rotation of the cutters, and the gear blank and cutter arbor are so connected by gearing that when the blank rotates in the direction of the arrow *x*, the cutter arbor will

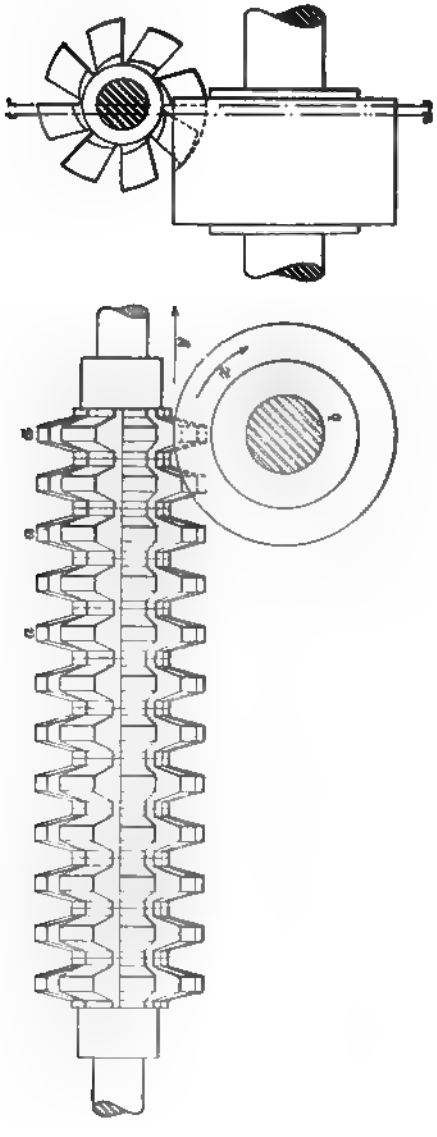

FIG. 17.

advance in the direction of the arrow y at exactly the same velocity; that is, the cutter arbor and gear blank will move in relation to each other exactly as if they were a rack and pinion in mesh.

65. Let the gear blank and cutter be brought together as shown in the end view, the cutter revolving about its axis and cutting into the blank. Then, if the blank is rotated at the same time that the cutter is moved in the direction of its axis, the cutter teeth will cut out grooves in such a manner that their profile in the plane $r\ s$ will be that of teeth conjugate to those of the rack represented by a longitudinal section of the cutter. When the blank has revolved one turn, let the cutter and the blank be separated; return the cutter to its original position; bring the blank and cutter together again, and feed the cutter over the blank until the cutting is done in a plane $t\ u$ slightly in advance of $r\ s$. After this cut has been taken all around the blank, let the cycle of operations be repeated again and again until the cutter has been clear across the face of the gear blank. The teeth thus produced will be conjugate to those of the rack whose profile is given by a longitudinal section of the cutter.

66. Swasey Cutter.—The practical objections to the method of procedure just explained are the great number of cutters required and the deflection of the arbor on which they are carried. These objections have been overcome in an ingenious manner by Mr. Ambrose Swasey, and the process has thus been made mechanically practical.

An end view and partial sectional elevation of the **Swasey cutter** is shown in Fig. 18. Each cutter is seen to be divided into two parts, and the series of cutters are connected together into two independent sections, each of which is mounted on two cylindrical rods passing through the holes shown. The four rods pass through cylindrical sleeves at each side of the cutters; the holes in the sleeves through which the rods pass are placed in such a relation to the axis of the sleeves that upon revolving them the cutters will run true. Each section of cutters is moved in the direction of

the axis by a cam at the same time that they revolve; as soon as one section during its revolution has cleared the gear blank, the cam throws it back to its original position, and just before commencing to cut it begins to slide forwards

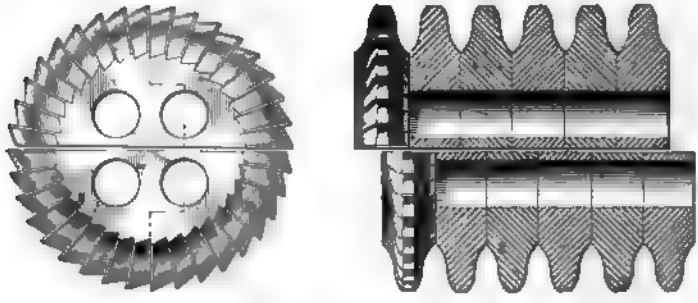

FIG. 18.

again at a velocity equal to that of a point on the pitch circle of the gear blank. It will be understood that while one section of the cutters is engaged with the blank, the section clear of the blank is being returned to its original position.

67. The motion of each section of the cutter during one of its revolutions can be easier understood by simply considering the motion of a point on the periphery of one cutter

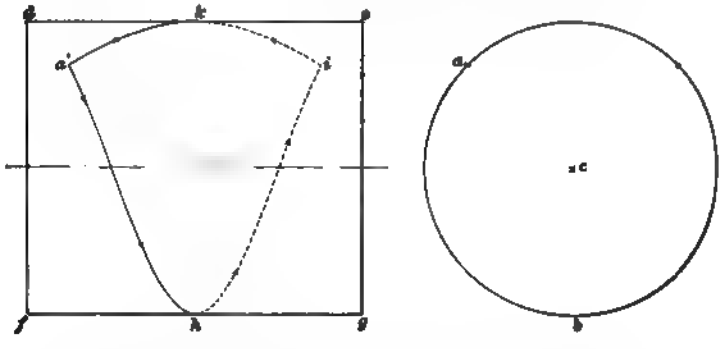

FIG. 19.

in one section For instance, consider the point *a* in Fig. 19, where the circle *b* represents the periphery of the cutter. Then, as this point remains at a constant distance from the

axis of rotation represented by the point c, it follows that during any axial movement the point a will follow a path lying on the surface of a cylinder, as $d e g f$. Let the point whose motion we are considering be at a' on the surface of the cylinder. Then, as soon as the gear blank and cutter begin to move in respect to each other, the point a' during the rotation and axial advance of the cutter follows the right-handed helical path $a' h i$ in the direction given by the arrows. When the point a' reaches the position i, the cam constraining the axial motion of the cutter commences to return it to its original position, and the point whose motion we are considering returns along the left-handed helical path $i k a'$ to its starting point a'.

68. By timing the action of the two sections in such a manner that when one is at the limit of its forward travel and about to return, the other section is just beginning to travel forwards, the cutting action of the two sections is made equivalent to that of an infinite number of equal cutters, similar to those shown in Fig. 17, placed alongside each other. After the Swasey cutters have passed once clear around the wheel that is being cut, the cutters are advanced a little in front of the plane in which the cut just finished was taken and the new cut is taken all around the gear blank again. This cycle of operations is repeated automatically until the cutters have been across the whole face of the wheel.

69. The Swasey process of generating gear-teeth involves the use of a special machine. In this machine the cutter and the gear blank are connected together in such a manner that the cutter makes, during each revolution of the gear, a number of revolutions exactly equal to the number of teeth which the gear to be cut is intended to have. While this is unnecessary in the process described in Art. **64**, it is absolutely essential with the modified cutters used, in order that the cams giving the axial motion to the cutter sections shall time the motions correctly.

70. Molding-Milling Bevel Gears. — A molding-milling process for generating octoidal bevel-gear teeth has recently been brought out by Mr. Warren, and a number of special machines for it have been built by The Pratt & Whitney Company, of Hartford, Connecticut. This process is based on the Bilgram bevel-gear planing process; a milling cutter having a section equal to that of an involute straight rack tooth is substituted for the planing tool, however. The gear blank is given the same rolling motion as is done in the Bilgram machine, and octoidal teeth conjugate to those of a circular rack are formed. In this process, two milling cutters are employed, in order to finish both sides of a tooth at once; their lines of motion converge toward the apex of the pitch cone.

MAKING WORM-WHEELS.

71. In practice worm-wheels are cut either approximately or exactly correct. In the former case, a formed involute spur-gear cutter having a designating mark corresponding to the number of teeth equal to the number of turns of the worm for one revolution of the worm-wheel, is used; in the latter case, a special rotary cutter, called a **hob,** is employed, and generates teeth conjugate to its own.

72. Cutting With a Formed Cutter. — When a formed cutter is used, the teeth are generally cut in a straight path diagonally across the face at an angle corresponding to that of the worm, but otherwise cutting the worm-wheel as if it were a spur gear. In practice, the angle that the teeth make with the axis of the worm-wheel is found by trial; the index head of the universal milling machine is swiveled on its table for this purpose and a few teeth are cut. The worm is then tried in these teeth to see whether its axis is at right angles to that of the worm-wheel; the setting is changed if this is not the case. Owing to the liability of spoiling the gear blank by these trial cuts, it is recommended to use a hardwood blank of the same size to experiment on.

73. Hobbing.—Hobbing will produce the best worm-wheel, and is the process that should always be employed for a wheel subjected to much use. The hob is shown in Fig. 20. It will be noticed that it is nothing but a worm that has been serrated in order to form cutting edges. In order that the thread of the worm may clear the bottom of the corresponding spaces in the worm-wheel, the thread of the hob is made slightly higher than that of the worm.

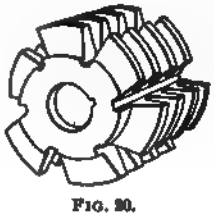

FIG. 20.

74. In hobbing a worm-wheel, the wheel is placed on an arbor between the centers, but is not confined by a dog, so that it is free to rotate about its axis. The hob is placed at right angles to the axis of rotation of the worm-wheel and while revolving is sunk into the face of the worm-wheel to the desired depth. The hob, in continuing to revolve, rotates the worm-wheel and cuts its teeth to a shape conjugate to that of its own.

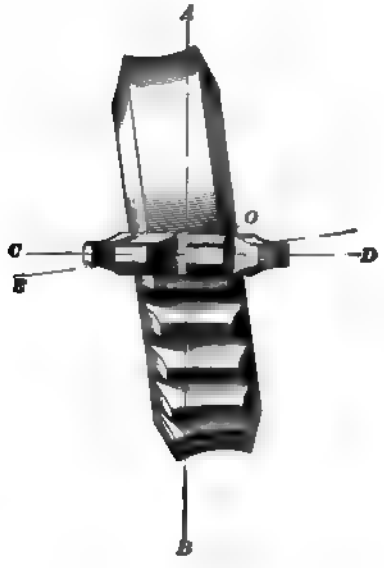

FIG. 21.

75. A worm-wheel that is to be hobbed should always be prepared for hobbing by notching it with an involute cutter slightly narrower than the face of the hob teeth. This process is called **g a s h i n g**, and is done in a horizontal machine as follows: The blank is mounted on an arbor and placed between index centers, which are arranged to index for the number of teeth the worm-wheel is to have. The milling-machine table, after being set to zero, is moved

horizontally until the axis $A\,B$ of the cutter is in the central plane of the worm-wheel, as shown in Fig. 21. The table is then swung on the saddle until the angle $B\,O\,E$ corresponds approximately to the angle of the helix of the worm, and the notches are cut, raising the knee by means of the vertical feed. The table is then swung back to zero and the hob is used for finishing the teeth. Since the worm-wheel is driven by the hob, the notches must be deep enough and wide enough to insure good driving when the hob is first applied. If hobbing is attempted without previous gashing, it will often happen that a greater number of teeth than is desired will be obtained.

76. In machines designed especially for cutting worm-gears, the hob and wheel blank are connected together by gearing that drives the wheel blank at the proper speed. Gashing may be omitted in such machines, since the change gears insure a correct spacing of the worm-wheel teeth.

A SERIES

OF

QUESTIONS AND EXAMPLES

Relating to the Subjects Treated of in this Volume.

It will be noticed that the various Question Papers that follow have been given the same section numbers as the Instruction Papers to which they refer. No attempt should be made to answer any of the questions or to solve any of the examples until the Instruction Paper having the same section number as the Question Paper in which the questions or examples occur has been carefully studied.

WORKING CHILLED IRON.

(1) What points must be observed in working chilled castings?

(2) How do the lathes used for turning chilled rolls differ from ordinary engine lathes?

(3) In turning chilled rolls, how is the roll held and how driven, both in the case of rolls having the bearings cast with the roll and in the case of rolls whose chilled portion is turned up as a shell and subsequently fitted to a center carrying the bearings?

(4) Describe the tools used for turning parallel rolls such as are used in flouring mills.

(5) How do the tools used in turning rolling-mill and grooved rolls differ from those used in turning flouring-mill rolls?

(6) What means are used for holding the turning tools in a lathe used for turning chilled rolls?

(7) What can you say of the cutting speeds used in turning chilled-iron rolls?

(8) In turning chilled iron, how is the tool fed to the roll?

(9) In turning rolls for rolling hot iron, how much allowance must be made in the size of the grooves so that the bars will be standard when cold?

(10) How are parallel rolls, such as are used in flouring mills, paper mills, and for rolling sheet metal, generally finished?

Copyright, 1901, by THE COLLIERY ENGINEER COMPANY.
Entered at Stationers' Hall, London.
All rights reserved.

(11) How may parallel-ground rolls be tested to determine the accuracy of the work?

(12) What are the essential features of the roll-grooving or corrugating machines?

(13) What is the cutting speed used in corrugating rolls?

(14) If it is desired to finish chilled-iron dies or other flat work on a common planer, what precautions should be observed?

(15) How can the cutting tool be arranged so that it will rough and finish the entire die, or other flat surface, at one setting, when finishing work in an ordinary planer arranged for planing chilled iron?

PLANER, SHAPER, AND SLOTTER WORK.

(PART 1.)

---

(1) Describe briefly the general action of the planer.

(2) What are the two styles of planers in use, as distin guished by the method of driving the platen?

(3) How is the quick-return motion secured in planers?

(4) What is a *false jaw* and what purpose does it serve?

(5) What is the proper way to chuck a piece of work for planing parallel sides when its thickness is less than the depth of the jaws of the chuck?

(6) What are the two points to be observed in using bolts and clamps for holding work on the platen?

(7) What is the most useful form of clamp for general work?

(8) What is the point to be observed in using *toe dogs* for holding work on the platen?

(9) How may a shaft be supported on and clamped to the platen when it has various parts of different diameters?

(10) The three rows of holes in the worm-wheel of a planer center contain, respectively, 56, 64, and 72 holes. Which one of the rows of holes is to be used to divide a

Copyright, 1901, by THE COLLIERY ENGINEER COMPANY.
Entered at Stationers' Hall, London.
All rights reserved.

circle into 12 parts and how many holes must the wheel be shifted for each division? Ans. 6 holes of the 72-hole row.

(11) How may very thin and flat work be held to the platen?

(12) How is springing of the work by clamping avoided?

(13) How may a piece of work be reset?

(14) How much clearance is generally given to planer tools?

(15) Upon what does the keenness and strength of a planer tool depend?

(16) How can breaking the edge of the work be prevented?

(17) What is the object of swinging the tool block to an inclined position for planing side faces?

(18) How should the tool block always be swung with reference to the plane of the surface to be planed?

(19) How should the tool always be fed in planing side faces?

(20) What is the object of *underhung* tools?

(21) What precaution must be taken to avoid throwing the tool into the work or breaking it on the return stroke when making undercuts?

(22) How may damage to the work and tool on the return stroke be prevented in cutting T slots?

PLANER, SHAPER, AND SLOTTER WORK.

(PART 2.)

---

(1) To what speed are planers usually belted?

(2) What is a good rule to observe in planing work that is likely to have internal stresses?

(3) How may work be planed that is too long for the platen?

(4) How may work be planed that is too wide for the housings?

(5) What are the points of difference between the operation of a shaper and that of a planer?

(6) What is the difference between a crank shaper and a geared shaper?

(7) What is the average cutting speed of the tool in a crank shaper making 80 strokes per minute, the stroke being 10 inches? Ans. 133⅓ ft. per minute.

(8) How is a keyway terminating in the work cut on a shaper?

(9) How can a rack be cut on a shaper?

(10) What limits the stroke of a shaper?

(11) What is a draw-cut shaper, and what is its purpose?

Copyright, 1901, by THE COLLIERY ENGINEER COMPANY.
Entered at Stationers' Hall, London.
All rights reserved

(12) Why is an *open-side planer* more like a shaper than a planer ?

(13) What is the principal difference between a slotting machine and a shaper ?

(14) How is the work set on a slotter table ?

(15) In what way do slotter tools differ from lathe, planer, or shaper tools ?

(16) Name some examples of slotter work.

DRILLING AND BORING.

(PART 1.)

(1) What are the essential parts of a drilling machine?

(2) What is the principal function of the drilling machine?

(3) Name other operations that can be conveniently performed on a drilling machine.

(4) Define the terms *reaming*, *countersinking*, *counterboring*, *spot facing*, *tapping*, *center drilling*.

(5) What are the common characteristics of all drills?

(6) What conditions must be fulfilled in constructing a flat drill in order that it may cut a smooth, round hole?

(7) What will be the effect of the point of a flat drill being out of center?

(8) Why should the point of a flat drill be as thin as possible?

(9) What is the effect of a grooved drill point?

(10) What are the advantages of making the sides of flat drills parallel?

(11) What is the object of making a flat drill *lipped*?

(12) What is the objection to lipped drills and how may the same be overcome?

Copyright, 1901, by THE COLLIERY ENGINEER COMPANY.
Entered at Stationers' Hall, London.
All rights reserved.

(13) How is a *twist drill* constructed ?

(14) What are *slot drills* used for ?

(15) What kinds of tools are used when large holes are to be bored in a piece of work on the drilling machine ?

(16) What is the object of the *spring center* in the double annular cutter shown in Fig. 27 of the Instruction Paper ?

(17) In drilling cast iron, should the drill be lubricated ?

(18) Why should the faces of reamers not be undercut ?

(19) How is a brass reamer made ?

(20) What are the advantages of adjustable reamers ?

(21) How may different sized holes be countersunk with the same pin countersink ?

(22) Describe a counterbore suitable for light work.

(23) What is the objection to a straight socket in the drill spindle ?

(24) What is a *collet ?*

(25) What is a *drill chuck ?*

(26) What is the principle underlying the safety drilling and tapping device illustrated by Fig. 64 of the Instruction Paper ?

(27) What are the requirements that the table of a drill press must fulfil ?

(28) How are cylindrical pieces secured to the table ?

(29) What are the characteristic features of the universal vise ?

(30) How should the holes in two pieces of work which are to match be drilled if possible ?

DRILLING AND BORING.

(PART 2.)

---

(1) Name features in a modern drilling machine that are calculated to give flexibility to it.

(2) Suppose it was found that in drilling ½-inch holes in a certain material, the best speed of the spindle was 150 revolutions per minute. What speed should the spindle be given for drilling 1¼-inch holes in the same material?

Ans. 60 rev. per min.

(3) What are the features of flexibility possessed by the drilling machine shown in Fig. 1 of the Instruction Paper?

(4) What is the purpose of the wheel feed in the drill press shown in Fig. 1 of the Instruction Paper?

(5) What advantage does the rectilinear adjustment of the table possess?

(6) What are the characteristic features of a *radial drill?*

(7) What is the purpose of an outer column in a radial drill?

(8) What is the characteristic feature of a universal radial drill?

(9) What precaution should be taken in drilling on a multiple-spindle drill with universal adjustable spindles?

(10) What is a sensitive drill?

Copyright, 1901, by THE COLLIERY ENGINEER COMPANY.
Entered at Stationers' Hall, London.
All rights reserved.

(11) Name various kinds of portable drills and give briefly their characteristics.

(12) What are the two general types of *boring machines?*

(13) Give a general but brief description of a vertical boring and turning mill.

(14) What are the principal points to be observed in setting a piece of work on the table of a vertical boring and turning mill?

(15) What is understood in the language of the machine shop by the term "boring" in distinction from "drilling"?

(16) Describe briefly the construction of a simple boring bar.

(17) What is a *post drill*, and what kind of work is it suitable for?

(18) Describe the general arrangement of a *horizontal floor mill.*

(19) How should engine, pump, or other cylinders always be set up for boring?

(20) What is to be said about the finishing cut in boring cylinders?

(21) Give the principle employed in boring spherical surfaces.

DRILLING AND BORING.

(PART 3.)

---

(1) How is a hole to be drilled generally *laid out* or marked ?

(2) When a drill starts wrong, what is the remedy ?

(3) What are the advantages of power feed ?

(4) What is the effect of a *lead* hole ?

(5) How may deep holes be drilled ?

(6) What care must be taken in reaming ?

(7) When is machine reaming in order ?

(8) What is the best form of tap to be used for ordinary work ?

(9) What is the effect of too small a hole in tapping ?

(10) What is the effect of too large a hole in tapping ?

(11) Should a lubricant be used in tapping cast iron ?

(12) Describe a method for measuring the cutting and clearance angles of twist drills.

(13) What is to be observed with regard to the angle and length of the scraping edge of drills ?

(14) How is a plain drilling jig constructed ?

(15) What style of jig may be employed for drilling bolt holes in the cover and flanges for pump heads and similar

Copyright, 1901, by THE COLLIERY ENGINEER COMPANY.
Entered at Stationers' Hall, London.
All rights reserved.

work, when the holes are not regularly spaced and when it is desired to drill the cylinders and the heads separately?

(16) If you wish to remove a mass of metal from the end of a rod so as to form a large hole, as in the case of a locomotive connecting-rod, what style of tool would you employ?

(17) When cylindrical work is to have a series of holes drilled about its periphery, how can it be supported in a drill press both when the periphery is a true circle and when it has been bored to receive a shaft piston or other circular piece?

(18) How is the core of metal left by a trepanning drill cut off at its lower end?

(19) How may a boring mill be arranged for turning spherical surfaces?

MILLING-MACHINE WORK.

(PART 1.)

---

(1) In what respect does the process called "milling" differ from other cutting processes used for removing metal?

(2) What is generally the position of the axis of rotation of the cutter in plain milling machines?

(3) What is the distinguishing feature of a vertical milling machine?

(4) What motions of the work, in respect to the cutting tool, must a milling machine permit in order to be called a *universal* milling machine?

(5) For what are multispindle milling machines intended?

(6) What are the essential parts of any milling machine?

(7) For what is a raising block used?

(8) When is a steady rest employed?

(9) How is a right-handed milling cutter distinguished from a left-handed one?

(10) Why is a slitting saw given side clearance?

(11) A milling cutter is 2 inches in diameter and has 24 teeth; what is its pitch? Ans. .262 in.

(12) What are the objections to straight-tooth face cutters, and how are they overcome?

(13) For what class of work are cutters with nicked teeth intended?

(14) What is a straddle mill?

Copyright, 1901, by THE COLLIERY ENGINEER COMPANY.
Entered at Stationers' Hall, London.
All rights reserved

(15) What is a gang mill?

(16) What precaution is to be observed in connection with threaded cutters?

(17) What is a slotting cutter?

(18) What is the difference between a single-angle and a double-angle cutter?

(19) For what is a cotter mill used?

(20) What is the characteristic feature of formed cutters?

(21) What are the two principal points to be considered in the care of milling cutters?

(22) When a milling cutter is used on an arbor in a machine that has no outboard bearing, what precautions should be observed?

(23) How can the friction between the cutter placed on an arbor and its washers be increased in case of slipping?

(24) What precautions should be taken before driving home a shank arbor?

(25) If you found that a collet had become so enlarged by constant use that the shank of the arbor bottomed, what would you do?

(26) How are iron and steel castings prepared previous to being operated upon by milling cutters?

(27) A face mill 4 inches in diameter makes 36 revolutions per minute. What is its cutting speed in feet per minute? Ans. 37.7 ft.

(28) For a certain quality of soft gray cast iron, a cutting speed of 40 feet per minute has been selected; the cutter to be used is 3 inches in diameter. How many revolutions must the cutter make? Ans. 50 rev.

MILLING-MACHINE WORK.

(PART 2.)

(1) What is the chief benefit derived from lubricating milling cutters?

(2) For what materials can the lubrication of the milling cutter be dispensed with?

(3) What lubricant is it best to use when provision is made for catching and separating the drippings from the chips?

(4) The groove in the piece shown in Fig. 1 is to be milled. What kind of a cutter would you use on a plain horizontal milling machine, when the base of the work is clamped directly to the table?

(5) What kind of a cutter would you use in a vertical milling machine to mill the top and the groove of the piece shown in Fig. 1?

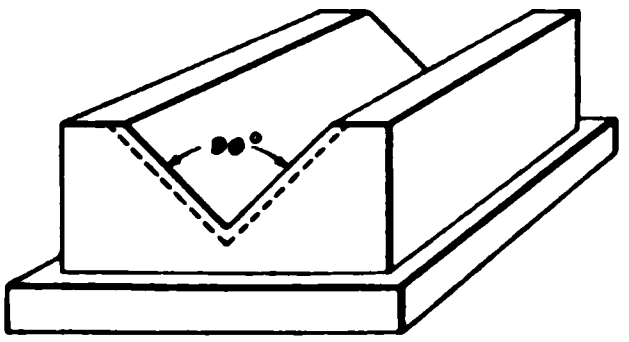

FIG. 1.

(6) Two thousand cast-iron pieces were milled over a surface 5 inches long and 2 inches wide. The first thousand pieces were finished with an end mill 3 inches in diameter, and the second thousand were milled with a similar mill 2¼ inches in diameter; the cutting speed and feed were the same in both cases. The same man finished all the pieces and saved nearly ten hours on the second thousand. How do you explain this?

Copyright. 1901, by THE COLLIERY ENGINEER COMPANY.
Entered at Stationers' Hall, London.
All rights reserved.

(7) Why should clamps for milling-machine work be more rigid and be more securely applied than for planing?

(8) How may the setting of work parallel to the table be tested in a vertical milling machine?

(9) Why is the method of clamping a cylindrical piece of work for grooving that is shown in Fig. 9 (*a*) of the Instruction Paper inferior to the methods shown in Fig. 9 (*b*) and (*c*)?

(10) How does a swivel vise differ from a plain vise?

(11) What is the distinctive feature of a universal vise?

(12) How do you set the jaws of a graduated swivel vise parallel to the line of motion?

(13) How do you set a swivel vise so that its jaws are parallel to the line of motion when it has no base graduations?

(14) How may a graduated swivel vise be tested for the accuracy of its zero mark?

(15) How do you set the jaws of an ungraduated swivel vise at right angles to the line of motion?

(16) What is the chief difference between plain and universal index centers?

(17) What is a spiral index head?

(18) Name some work that can be done between centers.

(19) How may tapering work be set to the required inclination between centers, if the index head and tailstock are non-adjustable and the milling machine is a vertical one?

(20) What is the effect of setting tapering work to the required inclination by blocking up the tailstock?

(21) Given an index head that can be swung in a vertical plane and a tailstock that can be adjusted vertically in the same plane; how can the work be set so that even divisions may be obtained?

(22) When the angle that the cut makes with the axis of the work is given and a universal index head is available, how should the work be set?

MILLING-MACHINE WORK.

(PART 3.)

---

(1) What kind of chucks are used for holding work in a milling machine?

(2) What are the advantages and disadvantages of self-centering lathe chucks for milling-machine work?

(3) When side cuts are to be taken on a piece of work that is held in a chuck, how should the cutter be selected and the machine be arranged in reference to the thread of the chuck?

(4) How may the teeth of end mills be milled?

(5) What are the requirements of a properly designed milling jig?

(6) What is a steady rest and when should it be used?

(7) What is a follow rest, what is its purpose, and what are the objections to it?

(8) Define the terms direct and indirect indexing.

(9) The indexing mechanism of a certain milling machine is such that the crank must make 40 revolutions to produce 1 revolution of the index spindle. How many turns must the crank be given in order to divide the periphery of a piece of work into 9 parts? Ans. $4\frac{4}{9}$ turns.

(10) (*a*) What index circle would you use to measure $\frac{1}{8}$ of a turn when the index plate available has the following

Copyright, 1901, by THE COLLIERY ENGINEER COMPANY.
Entered at Stationers' Hall, London.
All rights reserved.

number of holes in the various circles: 21, 23, 27, 29, 31, 33? (*b*) How many holes must the latch pin be moved?

Ans. { (*a*) Circle of 27 holes. (*b*) 12 holes.

(11) The index spindle of a certain milling machine makes 1 turn to 40 turns of the index crank. (*a*) What number of turns must the crank make, and what index circle should be used to divide the circumference of a piece of work into 85 divisions? (*b*) The index plate available has circles of holes of the following numbers: 15, 16, 17, 18, 19, 20. What number of holes must the latch pin be moved, and in what circle?

Ans. { (*a*) $\frac{8}{17}$. (*b*) 8 holes in the 17-hole circle.

(12) A helix 3 inches in diameter has a lead of 10 inches; what is the angle of the helix? Ans. 43° 12′, nearly.

(13) A helix is to have an angle of 38° 20′ for a diameter of 4 inches. What is the lead of the helix?

Ans. 15.893 in.

(14) What is the lead of a milling machine, and how is it found?

(15) The lead of a certain milling machine is 10 inches. If a helix having a lead of 8 inches is to be cut, what gears may be used in simple gearing?

Ans. 24 and 30, or 32 and 40.

(16) A helix having a lead of 12 inches is to be cut; the gear on the feed-screw has 48 teeth, the first gear on the stud 40, and the second gear on the stud 32 teeth; what should be the number of teeth of the gear on the worm-gear stud? The lead of the machine is 10 inches. Ans. 72.

(17) The gears used to cut a certain helix in a machine having a lead of 10 inches are as follows: Gear on worm-gear stud, 56 teeth; first gear on stud, 64 teeth; second gear on stud, 72 teeth; gear on feed-screw, 40 teeth; what is the lead of the helix cut? Ans. 15.75 in.

(18) What kind of cutter should always be used in milling helical angular grooves?

(19) In a cylindrical piece of work 2 inches in diameter, grooves are to be cut $\frac{1}{8}$ inch deep, measured radially, one side of the grooves being radial. The angle of the cutter on the side cutting the radial side of the groove is 30 degrees, how much must the cutter be set off center? Ans. $\frac{7}{16}$ in.

(20) In cutting helical grooves with double-angle cutters, how should the work revolve with respect to the cutter?

MILLING-MACHINE WORK.

(PART 4.)

---

(1) Which are the most commonly used special attachments for milling machines?

(2) If for some reason it is considered desirable to feed a piece of work *with* the cutter in a machine arranged for feeding *against* the cutter, what precaution would be taken by an experienced operator before commencing the cut?

(3) Why is it considered better to feed a piece of work *against* the cutter when the work has a hard surface?

(4) From the examples given in the Instruction Paper, name some of the considerations that determine the direction of feed and rotation of cutter.

(5) What is the proper way of setting an end mill for finishing a slot in one operation?

(6) How can "undercutting" be prevented in feeding a face mill into corners?

(7) What precaution is to be observed in *starting the cut?*

(8) How may a breaking out of the edge where the cut runs out be prevented?

(9) What are the causes producing revolution marks?

(10) How may revolution marks be reduced?

(11) The spindle speeds of a milling machine for the various steps of the cone pulley are as follows: Largest step, 126 revolutions per minute; medium step, 202 revolutions

Copyright, 1901, by THE COLLIERY ENGINEER COMPANY.
Entered at Stationers' Hall, London.
All rights reserved.

per minute; small step, 330 revolutions per minute. On what step should the belt be placed to give a cutting speed of 80 feet per minute to a cutter 1¼ inches in diameter?

Ans. Medium step.

(12) At a certain setting of a milling machine its spindle makes 11 revolutions to 1 revolution of the feed-screw, which has a lead of ¼ inch. What is the feed per minute when the spindle makes 126 revolutions per minute?

Ans. 2⅞ in., nearly.

(13) What are the indications of an excessive speed or feed in a milling machine?

(14) How do you set a face cutter to mill a piece of work to a given height above the table, the cut being parallel to the table?

(15) A cylindrical piece of work is exactly 3.12 inches in diameter. A slot is to be milled into this cylinder parallel to the axis so that the bottom of it shall be .91 inch from the axis. To what depth must the cutter be set?

Ans. .65 in.

(16) How may a cutter be set central in respect to a piece of work that is held between centers?

(17) How may straddle mills be adjusted for width?

(18) How should gang mills be assembled on an arbor?

(19) What type of milling machine would be selected for the tool room?

(20) What type of milling machine would be considered as best adapted for milling long bars having an **I** section, the sides and bottom of the groove to be milled simultaneously?

GEAR-CUTTING.

(PART 1.)

---

(1) What is a gear, and for what are gears used ?

(2) Define the term *pitch* as applied to gearing.

(3) Name two kinds of pitch in common use, and describe each.

(4) Define the terms *pitch circle* and *pitch diameter*.

(5) What is the addendum, thickness of tooth, clearance, and where is each measured ?

(6) If the circular pitch is .5236 inch, what is the diametral pitch ? Ans. 6.

(7) If a gear is 20 inches in diameter and the diametral pitch is 6, how many teeth has it ? Ans. 120.

(8) How can the number of teeth in a gear blank be found when the outside diameter and the diametral pitch are known ?

(9) How can the pitch diameter be found when the number of teeth and circular pitch are known ?

(10) How many teeth will there be in a gear-wheel 24 inches in diameter, if the circular pitch is 1.5708 ?

Ans. 48.

(11) Define velocity ratio and give an example illustrating it.

(12) Name the two systems of gearing in common use, and show how they differ.

Copyright, 1901, by THE COLLIERY ENGINEER COMPANY.
Entered at Stationers' Hall, London.
All rights reserved.

(13) What is an odontograph, and for what is it used?

(14) What is a rack and in what manner do its teeth differ from those of a gear?

(15) What is a bevel gear, and what is the difference between bevel and miter gears?

(16) In laying out the teeth for bevel gears, what circle is used as a pitch circle for constructing the teeth curves? Illustrate by sketch.

(17) Define the terms *worm* and *worm-wheel.*

(18) What is the usual angle of the sides of a worm-thread?

(19) Under what circumstances should a hobbed worm-wheel be used?

(20) There are two shafts at right angles to each other and 8 inches from center to center. It is desired to connect them by means of a worm-gear and worm, the worm to have a single thread of such a pitch that it can be cut on an ordinary lathe and the velocity ratio between the shafts to be 1 to 42. Make the necessary assumptions and determine the pitch diameter, the number of teeth of the worm-wheel, and the pitch and outside diameters of the worm that will be necessary in this case.

If a pitch of 1 inch is assumed, the following values will be found:

Ans.
- Pitch diameter of worm-gear = 13.369 in.
- Pitch diameter of worm = 2.632 in.
- Outside diameter of worm = 3.2686 in.

GEAR-CUTTING.

(PART 2.)

(1) Name the two systems of forming gear-teeth, and state the advantages of each.

(2) What process of cutting gear-teeth is employed when the teeth are cut on a milling machine, and what advantages and disadvantages has this system ?

(3) For what class of gear-cutting is the templet-planing process mostly used, and why is it not generally applied to the cutting of spur gears ?

(4) Find the proper depth of cut for a 3-pitch Brown & Sharpe cutter. Ans. .719 in.

(5) What sort of a gauge is used to determine the depth of gear teeth cut according to the Brown & Sharpe system, and how is the gauge used ?

(6) What two classes of gang cutters are there for milling gear-teeth, and what are the advantages of each class ?

(7) Give the principal features of an automatic gear-cutter.

(8) What is the difference between the milling cutters used for cutting spur and bevel gears ?

(9) Is the cutter for bevel gears selected for the actual number of teeth in the gear, and if not, how is it selected ?

(10) What are the principal defects in bevel gear-teeth cut by the ordinary milling-machine process ?

Copyright, 1901, by THE COLLIERY ENGINEER COMPANY.
Entered at Stationers' Hall, London.
All rights reserved.

(11) How may racks be cut in the milling machine?

(12) Describe the planing of bevel gear-teeth by the templet-planing process, and state in what particular the teeth cut by this method differ from those cut by a rotary cutter.

(13) How may hardened gear-teeth be made correct after hardening?

(14) What processes can be employed to cut internal gears, and what processes cannot be employed for this work?

(15) Describe the process of hobbing worm-gears.

(16) Why is it necessary to gash a worm-gear blank before hobbing the teeth?

A KEY

TO THE

EXAMPLES

INCLUDED IN THE

QUESTION PAPERS IN THIS VOLUME.

It will be noticed that the Keys have been given the same section numbers as the Question Papers to which they refer. All article references refer to the Instruction Paper bearing the same section number as the Key in which it occurs, unless another "Part" or the title of some other Instruction Paper is given in connection with the article number. Answers have been given only to those questions which require an arithmetical calculation.

ANSWERS TO QUESTIONS

IN THIS VOLUME

REQUIRING NUMERICAL CALCULATIONS.

PLANER, SHAPER, AND SLOTTER WORK.

PART 1.

(10) Dividing 56, 64, 72 successively by 12 gives $4\frac{2}{3}$, $5\frac{1}{3}$, 6. The 72-hole row is thus to be used and the wheel shifted 6 holes for each division, according to rule given in Art. **40.**

PART 2.

(7) In one stroke the tool moves 10 inches forward and 10 inches backward, or 20 inches in all; in 80 strokes, then, that is, in one minute, it moves $20 \times 80 = 1{,}600$ inches $=$ $133\frac{1}{3}$ feet. Ans.

DRILLING AND BORING.

PART 2.

(2) The diameter of the first hole is to the diameter of the second hole as 2 to 5, and since, according to Art. **4,** §§ 8, 9, 11

the cutting speeds should be inversely proportional to the diameters, we have

$$150 : \text{new cutting speed} = 5 : 2.$$

$$\text{New cutting speed} = \frac{2 \times 150}{5} = 60 \text{ rev. per min.} \quad \text{Ans.}$$

MILLING-MACHINE WORK.

PART 1.

(11) By the statement made in Art. **35**, the pitch is

$$\frac{2 \times 3.1416}{24} = .262 \text{ in.} \quad \text{Ans.}$$

(27) By the rule given in Art. **102**, the cutting speed is found to be

$$\frac{4 \times 3.1416 \times 36}{12} = 37.7 \text{ ft. per min.} \quad \text{Ans.}$$

(28) Referring to Table V, in the column headed 3″, we find 39.27 feet as the nearest cutting speed. Following this cutting speed over to the left until the first vertical column is reached, the corresponding number of revolutions is found to be 50. Ans.

PART 3.

(9) By the rule given in Art. **37**,

$$40 \div 9 = 4\tfrac{4}{9} \text{ turns.} \quad \text{Ans.}$$

(10) (*a*) Of the given numbers, only 27 is divisible by 9; thus we select the circle having that number of holes. See Art. **39**.

(*b*) Then, by the rule given in Art. **39**,

$$27 \times \tfrac{4}{9} = 12 \text{ holes.} \quad \text{Ans.}$$

(11) (*a*) By the rule given in Art. **37**,

$$40 \div 85 = \tfrac{8}{17}. \quad \text{Ans.}$$

(*b*) By the rule given in Art. **39,** the circle having 17 holes is selected. Then, the number of holes is

$$17 \times \tfrac{8}{17} = 8 \text{ holes.} \quad \text{Ans.}$$

(12) By the rule given in Art. **54,**

$$\frac{3 \times 3.1416}{10} = .94248.$$

From a table of natural tangents, the corresponding angle is found to be 43° 12′, nearly. Ans.

(13) Apply the rule given in Art. **55.** The tangent of the given angle is .79070; therefore,

$$\text{lead} = \frac{3.1416 \times 4}{.79070} = 15.893 \text{ in.} \quad \text{Ans.}$$

(15) By Art. **66,**

$$\frac{\text{lead of the spiral}}{\text{lead of the machine}} = \tfrac{8}{10} = \tfrac{24}{30} = \tfrac{32}{40}. \quad \text{Ans.}$$

(16) By the rule given in Art. **74,**

$$\frac{12 \times 48 \times 40}{32 \times 10} = 72. \quad \text{Ans.}$$

(17) Applying the rule given in Art. **75,** we get

$$\frac{10 \times 56 \times 72}{40 \times 64} = 15.75 \text{ in.} \quad \text{Ans.}$$

(19) Applying the rule given in Art. **85,** the sine of 12° is .5 = $\frac{1}{2}$.

Then, $(\frac{3}{2} - \frac{1}{8}) \times \frac{1}{2} = \frac{7}{16}$ in. Ans.

PART 4.

(11) The circumference of the cutter is $1\frac{1}{4} \times 3.1416 =$ 3.927, say 4 inches. Applying the rule given in Art. **42,** we get

$$\frac{12 \times 80}{4} = 240 \text{ rev.}$$

The medium step gives the nearest number of revolutions. Ans.

(12) Applying the rule given in Art. **43**, we get

$$\frac{\frac{1}{4} \times 126}{11} = 2.863, \text{ or } 2\tfrac{7}{8} \text{ in., nearly.} \quad \text{Ans.}$$

(15) $$\frac{3.12}{2} - .91 = .65 \text{ in.} \quad \text{Ans.}$$

GEAR-CUTTING.

PART 1.

(6) Applying the rule given in Art. **16**, the diametral pitch is found to be $\frac{3.1416}{.5236} = 6$. Ans.

(7) Applying the rule given in Art. **18**, the number of teeth is found to be $20 \times 6 = 120$. Ans.

(10) Applying the rule given in Art. **29**, the number of teeth is found to be

$$\frac{24 \times 3.1416}{1.5708} = 48. \quad \text{Ans.}$$

(20) Assume a pitch of 1 inch on the worm; then, according to the rule in Art. **77**, the pitch diameter of the worm-gear will be

$$\frac{42 \times 1}{3.1416} = 13.369.$$

The pitch diameter of the worm is found by taking half of the pitch diameter of the worm-gear from the center-to-center distance and doubling the remainder, as stated in Art. **81**; hence,

$$8 - \frac{13.369}{2} = 1.316,$$

and doubling this, we have $1.316 \times 2 = 2.632$ in.

The outside diameter of the worm is found from the rule in Art. **82** to be

$$1 \times .6366 + 2.632 = 3.2686 \text{ in.}$$

NOTE.—If a slightly different pitch had been assumed, different results would have been obtained that would have been equally correct, the only question being as to whether or not a lathe can be obtained to cut the desired pitch.

PART 2.

(4) Applying the rule in Art. **19,**

$$\frac{2.157}{3} = .719 \text{ in.} \quad \text{Ans.}$$

TABLES

OF

NATURAL SINES, COSINES, TANGENTS,

AND COTANGENTS

GIVING THE VALUES OF THE FUNCTIONS FOR

ALL DEGREES AND MINUTES FROM

0° TO 90°

′	0°		1°		2°		3°		4°		′
	Sine	Cosine	Sine	Cosine	Sine	Cosine	Sine	Cosine	Sine	Cosine	
0	.00000	1	.01745	.99985	.03490	.99939	.05234	.99863	.06976	.99756	60
1	.00029	1	.01774	.99984	.03519	.99938	.05263	.99861	.07005	.99754	59
2	.00058	1.	.01803	.99984	.03548	.99937	.05292	.99860	.07034	.99752	58
3	.00087	1.	.01832	.99983	.03577	.99936	.05321	.99858	.07063	.99750	57
4	.00116	1.	.01862	.99983	.03606	.99935	.05350	.99857	.07092	.99748	56
5	.00145	1.	.01891	.99982	.03635	.99934	.05379	.99855	.07121	.99746	55
6	.00175	1	.01920	.99982	.03664	.99933	.05408	.99854	.07150	.99744	54
7	.00204	1.	.01949	.99981	.03693	.99932	.05437	.99852	.07179	.99742	53
8	.00233	1.	.01978	.99980	.03723	.99931	.05466	.99851	.07208	.99740	52
9	.00262	1.	.02007	.99980	.03752	.99930	.05495	.99849	.07237	.99738	51
10	.00291	1.	.02036	.99979	.03781	.99929	.05524	.99847	.07266	.99736	50
11	.00320	.99999	.02065	.99979	.03810	.99927	.05553	.99846	.07295	.99734	49
12	.00349	.99999	.02094	.99978	.03839	.99926	.05582	.99844	.07324	.99731	48
13	.00378	.99999	.02123	.99977	.03868	.99925	.05611	.99842	.07353	.99729	47
14	.00407	.99999	.02152	.99977	.03897	.99924	.05640	.99841	.07382	.99727	46
15	.00436	.99999	.02181	.99976	.03926	.99923	.05669	.99839	.07411	.99725	45
16	.00465	.99999	.02211	.99976	.03955	.99922	.05698	.99838	.07440	.99723	44
17	.00495	.99999	.02240	.99975	.03984	.99921	.05727	.99836	.07469	.99721	43
18	.00524	.99999	.02269	.99974	.04013	.99919	.05756	.99834	.07498	.99719	42
19	.00553	.99998	.02298	.99974	.04042	.99918	.05785	.99833	.07527	.99716	41
20	.00582	.99998	.02327	.99973	.04071	.99917	.05814	.99831	.07556	.99714	40
21	.00611	.99998	.02356	.99972	.04100	.99916	.05844	.99829	.07585	.99712	39
22	.00640	.99998	.02385	.99972	.04129	.99915	.05873	.99827	.07614	.99710	38
23	.00669	.99998	.02414	.99971	.04159	.99913	.05902	.99826	.07643	.99708	37
24	.00698	.99998	.02443	.99970	.04188	.99912	.05931	.99824	.07672	.99705	36
25	.00727	.99997	.02472	.99969	.04217	.99911	.05960	.99822	.07701	.99703	35
26	.00756	.99997	.02501	.99969	.04246	.99910	.05989	.99821	.07730	.99701	34
27	.00785	.99997	.02530	.99968	.04275	.99909	.06018	.99819	.07759	.99699	33
28	.00814	.99997	.02560	.99967	.04304	.99907	.06047	.99817	.07788	.99696	32
29	.00844	.99996	.02589	.99966	.04331	.99906	.06076	.99815	.07817	.99694	31
30	.00873	.99996	.02618	.99966	.04362	.99905	.06105	.99813	.07846	.99692	30
31	.00902	.99996	.02647	.99965	.04391	.99904	.06134	.99812	.07875	.99689	29
32	.00931	.99996	.02676	.99964	.04420	.99902	.06163	.99810	.07904	.99687	28
33	.00960	.99995	.02705	.99963	.04449	.99901	.06192	.99808	.07933	.99685	27
34	.00989	.99995	.02734	.99963	.04478	.99900	.06221	.99806	.07962	.99683	26
35	.01018	.99995	.02763	.99962	.04507	.99898	.06250	.99804	.07991	.99681	25
36	.01047	.99995	.02792	.99961	.04536	.99897	.06279	.99803	.08020	.99678	24
37	.01076	.99994	.02821	.99960	.04565	.99896	.06308	.99801	.08049	.99676	23
38	.01105	.99994	.02850	.99959	.04594	.99894	.06337	.99799	.08078	.99673	22
39	.01134	.99994	.02879	.99959	.04623	.99893	.06366	.99797	.08107	.99671	21
40	.01164	.99993	.02908	.99958	.04653	.99892	.06395	.99795	.08136	.99668	20
41	.01193	.99993	.02938	.99957	.04682	.99890	.06424	.99793	.08165	.99666	19
42	.01222	.99993	.02967	.99956	.04711	.99889	.06453	.99792	.08194	.99664	18
43	.01251	.99992	.02996	.99955	.04740	.99888	.06482	.99790	.08223	.99661	17
44	.01280	.99992	.03025	.99954	.04769	.99886	.06511	.99788	.08252	.99659	16
45	.01309	.99991	.03054	.99953	.04798	.99885	.06540	.99786	.08281	.99657	15
46	.01338	.99991	.03083	.99952	.04827	.99884	.06569	.99784	.08310	.99654	14
47	.01367	.99991	.03112	.99952	.04856	.99882	.06598	.99782	.08339	.99652	13
48	.01396	.99990	.03141	.99951	.04885	.99881	.06627	.99780	.08368	.99649	12
49	.01425	.99990	.03170	.99950	.04914	.99879	.06656	.99778	.08397	.99647	11
50	.01454	.99989	.03199	.99949	.04943	.99878	.06685	.99776	.08427	.99644	10
51	.01483	.99989	.03228	.99948	.04972	.99876	.06714	.99774	.08455	.99642	9
52	.01513	.99989	.03257	.99947	.05001	.99875	.06743	.99772	.08484	.99639	8
53	.01542	.99988	.03286	.99946	.05030	.99873	.06773	.99770	.08513	.99637	7
54	.01571	.99988	.03316	.99945	.05059	.99872	.06802	.99768	.08542	.99635	6
55	.01600	.99987	.03345	.99944	.05088	.99870	.06831	.99766	.08571	.99632	5
56	.01629	.99987	.03374	.99943	.05117	.99869	.06860	.99764	.08600	.99630	4
57	.01658	.99986	.03403	.99942	.05146	.99867	.06889	.99762	.08629	.99627	3
58	.01687	.99986	.03432	.99941	.05175	.99866	.06918	.99760	.08658	.99625	2
59	.01716	.99985	.03461	.99940	.05205	.99864	.06947	.99758	.08687	.99622	1
60	.01745	.99985	.03490	.99939	.05234	.99863	.06976	.99756	.08716	.99619	0
′	Cosine	Sine	Cosine	Sine	Cosine	Sine	Cosine	Sine	Cosine	Sine	′
	89°		88°		87°		86°		85°		

′	5°		6°		7°		8°		9°		′
	Sine	Cosine	Sine	Cosine	Sine	Cosine	Sine	Cosine	Sine	Cosine	
0	.087 0	.99619	.10453	.99452	.12187	.99255	.13917	.99027	.15643	.98769	60
1	.08745	.99617	.10482	.99449	.12216	.99251	.13946	.99023	.15672	.98764	59
2	.08774	.99614	.10511	.99446	.12245	.99248	.13975	.99019	.15701	.98760	58
3	.08803	.99612	.10540	.99443	.12274	.99244	.14004	.99015	.15730	.98755	57
4	.08831	.99609	.10569	.99440	.12302	.99240	.14033	.99011	.15758	.98751	56
5	.08860	.99607	.10597	.99437	.12331	.99237	.14061	.99006	.15787	.98746	55
6	.08889	.99604	.10626	.99434	.12360	.99233	.14090	.99002	.15816	.98741	54
7	.08918	.99602	.10655	.99431	.12389	.99230	.14119	.98998	.15845	.98737	53
8	.08947	.99599	.10684	.99428	.12418	.99226	.14148	.98994	.15873	.98732	52
9	.08976	.99596	.10713	.99424	.12447	.99222	.14177	.98990	.15902	.98728	51
10	.09005	.99594	.10742	.99421	.12476	.99219	.14205	.98986	.15931	.98723	50
11	.09034	.99591	.10771	.99418	.12504	.99215	.14234	.98982	.15959	.98718	49
12	.09063	.99588	.10800	.99415	.12533	.99211	.14263	.98978	.15988	.98714	48
13	.09092	.99586	.10829	.99412	.12562	.99208	.14292	.98973	.16017	.98709	47
14	.09121	.99583	.10858	.99409	.12591	.99204	.14320	.98969	.16046	.98704	46
15	.09150	.99580	.10887	.99406	.12620	.99200	.14349	.98965	.16074	.98700	45
16	.09179	.99578	.10916	.99402	.12649	.99197	.14378	.98961	.16103	.98695	44
17	.09208	.99575	.10945	.99399	.12678	.99193	.14407	.98957	.16132	.98690	43
18	.09237	.99572	.10973	.99396	.12706	.99189	.14436	.98953	.16160	.98686	42
19	.09266	.99570	.11002	.99393	.12735	.99186	.14464	.98948	.16189	.98681	41
20	.09295	.99567	.11031	.99390	.12764	.99182	.14493	.98944	.16218	.98676	40
21	.09324	.99564	.11060	.99386	.12793	.99178	.14522	.98940	.16246	.98671	39
22	.09353	.99562	.11089	.99383	.12822	.99175	.14551	.98936	.16275	.98666	38
23	.09382	.99559	.11118	.99380	.12851	.99171	.14580	.98931	.16304	.98662	37
24	.09411	.99556	.11147	.99377	.12880	.99167	.14608	.98927	.16333	.98657	36
25	.09440	.99553	.11176	.99374	.12908	.99163	.14637	.98923	.16361	.98652	35
26	.09469	.99551	.11205	.99370	.12937	.99160	.14666	.98919	.16390	.98648	34
27	.09498	.99548	.11234	.99367	.12966	.99156	.14695	.98914	.16419	.98643	33
28	.09527	.99545	.11263	.99364	.12995	.99152	.14723	.98910	.16447	.98638	32
29	.09556	.99542	.11291	.99360	.13024	.99148	.14752	.98906	.16476	.98633	31
30	.09585	.99540	.11320	.99357	.13053	.99144	.14781	.98902	.16505	.98629	30
31	.09614	.99537	.11349	.99354	.13081	.99141	.14810	.98897	.16533	.98624	29
32	.09642	.99534	.11378	.99351	.13110	.99137	.14838	.98893	.16562	.98619	28
33	.09671	.99531	.11407	.99347	.13139	.99133	.14867	.98889	.16591	.98614	27
34	.09700	.99528	.11436	.99344	.13168	.99129	.14896	.98884	.16620	.98609	26
35	.09729	.99526	.11465	.99341	.13197	.99125	.14925	.98880	.16648	.98604	25
36	.09758	.99523	.11494	.99337	.13226	.99122	.14954	.98876	.16677	.98600	24
37	.09787	.99520	.11523	.99334	.13254	.99118	.14982	.98871	.16706	.98595	23
38	.09816	.99517	.11552	.99331	.13283	.99114	.15011	.98867	.16734	.98590	22
39	.09845	.99514	.11580	.99327	.13312	.99110	.15040	.98863	.16763	.98585	21
40	.09874	.99511	.11609	.99324	.13341	.99106	.15068	.98858	.16792	.98580	20
41	.09903	.99508	.11638	.99320	.13370	.99102	.15097	.98854	.16820	.98575	19
42	.09932	.99506	.11667	.99317	.13399	.99098	.15126	.98849	.16849	.98570	18
43	.09961	.99503	.11696	.99314	.13427	.99094	.15155	.98845	.16878	.98565	17
44	.09990	.99500	.11725	.99310	.13456	.99091	.15184	.98841	.16906	.98561	16
45	.10019	.99497	.11754	.99307	.13485	.99087	.15212	.98836	.16935	.98556	15
46	.10048	.99494	.11783	.99303	.13514	.99083	.15241	.98832	.16964	.98551	14
47	.10077	.99491	.11812	.99300	.13543	.99079	.15270	.98827	.16992	.98546	13
48	.10106	.99488	.11840	.99297	.13572	.99075	.15298	.98823	.17021	.98541	12
49	.10135	.99485	.11869	.99293	.13600	.99071	.15327	.98818	.17050	.98536	11
50	.10164	.99482	.11898	.99290	.13629	.99067	.15356	.98814	.17078	.98531	10
51	.10192	.99479	.11927	.99286	.13658	.99063	.15385	.98809	.17107	.98526	9
52	.10221	.99476	.11956	.99283	.13687	.99059	.15414	.98805	.17136	.98521	8
53	.10250	.99473	.11985	.99279	.13716	.99055	.15442	.98800	.17164	.98516	7
54	.10279	.99470	.12014	.99276	.13744	.99051	.15471	.98796	.17193	.98511	6
55	.10308	.99467	.12043	.99272	.13773	.99047	.15500	.98791	.17222	.98506	5
56	.10337	.99464	.12071	.99269	.13802	.99043	.15529	.98787	.17250	.98501	4
57	.10366	.99461	.12100	.99265	.13831	.99039	.15557	.98782	.17279	.98496	3
58	.10395	.99458	.12129	.99262	.13860	.99035	.15586	.98778	.17308	.98491	2
59	.10424	.99455	.12158	.99258	.13889	.99031	.15615	.98773	.17336	.98486	1
60	.10453	.99452	.12187	.99255	.13917	.99027	.15643	.98769	.17365	.98481	0
′	Cosine	Sine	Cosine	Sine	Cosine	Sine	Cosine	Sine	Cosine	Sine	′
	84°		83°		82°		81°		80°		

′	10°		11°		12°		13°		14°		′
	Sine	Cosine	Sine	Cosine	Sine	Cosine	Sine	Cosine	Sine	Cosine	
0	.17365	.98481	.19081	.98163	.20791	.97815	.22495	.97437	.24192	.97030	60
1	.17393	.98476	.19109	.98157	.20820	.97809	.22523	.97430	.24220	.97024	59
2	.17422	.98471	.19138	.98152	.20848	.97803	.22552	.97424	.24249	.97015	58
3	.17451	.98466	.19167	.98146	.20877	.97797	.22580	.97417	.24277	.97008	57
4	.17479	.98461	.19195	.98140	.20905	.97791	.22608	.97411	.24305	.97001	56
5	.17508	.98455	.19224	.98135	.20933	.97784	.22637	.97404	.24333	.96994	55
6	.17537	.98450	.19252	.98129	.20962	.97778	.22665	.97398	.24362	.96987	54
7	.17565	.98445	.19281	.98124	.20990	.97772	.22693	.97391	.24390	.96980	53
8	.17594	.98440	.19309	.98118	.21019	.97766	.22722	.97384	.24418	.96973	52
9	.17623	.98435	.19338	.98112	.21047	.97760	.22750	.97378	.24446	.96966	51
10	.17651	.98430	.19366	.98107	.21076	.97754	.22778	.97371	.24474	.96959	50
11	.17680	.98425	.19395	.98101	.21104	.97748	.22807	.97365	.24503	.96952	49
12	.17708	.98420	.19423	.98096	.21132	.97742	.22835	.97358	.24531	.96945	48
13	.17737	.98414	.19452	.98090	.21161	.97735	.22863	.97351	.24559	.96937	47
14	.17766	.98409	.19481	.98084	.21189	.97729	.22892	.97345	.24587	.969	46
15	.17794	.98404	.19509	.98079	.21218	.97723	.22920	.97338	.24615	.96923	45
16	.17823	.98399	.19538	.98073	.21246	.97717	.22948	.97331	.24644	.96916	44
17	.17852	.98394	.19566	.98067	.21275	.97711	.22977	.97325	.24672	.96909	43
18	.17880	.98389	.19595	.98061	.21303	.97705	.23005	.97318	.24700	.96902	42
19	.17909	.98383	.19623	.98056	.21331	.97698	.23033	.97311	.24728	.96894	41
20	.17937	.98378	.19652	.98050	.21360	.97692	.23062	.97304	.24756	.96887	40
21	.17966	.98373	.19680	.98044	.21388	.97686	.23090	.97298	.24784	.96880	39
22	.17995	.98368	.19709	.98039	.21417	.97680	.23118	.97291	.24811	.96873	38
23	.18023	.98362	.19737	.98033	.21445	.97673	.23146	.97284	.24841	.96866	37
24	.18052	.98357	.19766	.98027	.21474	.97667	.23175	.97278	.24869	.96858	36
25	.18081	.98352	.19794	.98021	.21502	.97661	.23203	.97271	.24897	.96851	35
26	.18109	.98347	.19823	.98016	.21530	.97655	.23231	.97264	.24925	.96844	34
27	.18138	.98341	.19851	.98010	.21559	.97648	.23260	.97257	.24954	.96837	33
28	.18166	.98336	.19880	.98004	.21587	.97642	.23288	.97251	.24983	.96829	32
29	.18195	.98331	.19908	.97998	.21616	.97636	.23316	.97244	.25011	.96822	31
30	.18224	.98325	.19937	.97992	.21644	.97630	.23345	.97237	.25038	.96815	30
31	.18252	.98320	.19965	.97987	.21672	.97623	.23373	.97230	.25066	.96807	29
32	.18281	.98315	.19994	.97981	.21701	.97617	.23401	.97223	.25094	.96800	28
33	.18309	.98310	.20022	.97975	.21729	.97611	.23429	.97217	.25122	.96793	27
34	.18338	.98304	.20051	.97969	.21758	.97604	.23458	.97210	.25151	.96786	26
35	.18367	.98299	.20079	.97963	.21786	.97598	.23486	.97203	.25179	.96778	25
36	.18395	.98294	.20108	.97958	.21814	.97592	.23514	.97196	.25207	.9677	24
37	.18424	.98288	.20136	.97952	.21843	.97585	.23542	.97189	.25235	.96764	23
38	.18452	.98283	.20165	.97946	.21871	.97579	.23571	.97182	.25263	.96756	22
39	.18481	.98277	.20193	.97940	.21899	.97573	.23599	.97176	.25291	.96749	21
40	.18509	.98272	.20222	.97934	.21928	.97566	.23627	.97169	.25320	.96742	20
41	.18538	.98267	.20250	.97928	.21956	.97560	.23656	.97162	.25348	.96734	19
42	.18567	.98261	.20279	.97922	.21985	.97553	.23684	.97155	.25376	.96727	18
43	.18595	.98256	.20307	.97916	.22013	.97547	.23712	.97148	.25404	.96719	17
44	.18624	.98250	.20336	.97910	.22041	.97541	.23740	.97141	.25432	.96712	16
45	.18652	.98245	.20364	.97905	.22070	.97534	.23769	.97134	.25460	.96705	15
46	.18681	.98240	.20393	.97899	.22098	.97528	.23797	.97127	.25488	.96697	14
47	.18710	.98234	.20421	.97893	.22126	.97521	.23825	.97120	.25516	.96690	13
48	.18738	.98224	.20450	.97887	.22155	.97515	.23853	.97113	.25545	.96682	12
49	.18767	.98223	.20478	.97881	.22183	.97508	.23882	.97106	.25573	.96675	11
50	.18795	.98218	.20507	.97875	.22212	.97502	.23910	.97100	.25601	.96667	10
51	.18824	.98212	.20535	.97869	.22240	.97496	.23938	.97093	.25629	.96660	9
52	.18852	.98207	.20563	.97863	.22268	.97489	.23966	.97086	.25657	.96653	8
53	.18881	.98201	.20592	.97857	.22297	.97483	.23995	.97079	.25685	.96645	7
54	.18910	.98196	.20620	.97851	.22325	.97476	.24023	.97072	.25713	.96638	6
55	.18938	.98190	.20649	.97845	.22353	.97470	.24051	.97065	.25741	.96630	5
56	.18967	.98185	.20677	.97839	.22382	.97463	.24079	.97058	.25769	.96623	4
57	.18995	.98179	.20706	.97833	.22410	.97457	.24108	.97051	.25798	.96615	3
58	.19024	.98174	.20734	.97827	.22438	.97450	.24136	.97044	.25826	.96608	2
59	.19052	.98168	.20763	.97821	.22467	.97444	.24164	.97037	.25854	.96600	1
60	.19081	.98163	.20791	.97815	.22495	.97437	.24192	.97030	.25882	.96593	0
′	Cosine	Sine	Cosine	Sine	Cosine	Sine	Cosine	Sine	Cosine	Sine	′
	79°		78°		77°		76°		75°		

′	15°		16°		17°		18°		19°		′
	Sine	Cosine	Sine	Cosine	Sine	Cosine	Sine	Cosine	Sine	Cosine	
0	.25882	.96593	.27564	.96126	.29237	.95630	.30902	.95106	.32557	.94552	60
1	.25910	.96585	.27592	.96118	.29265	.95622	.30929	.95097	.32584	.94542	59
2	.25938	.96578	.27620	.96110	.29293	.95613	.30957	.95088	.32612	.94533	58
3	.25966	.96570	.27648	.96102	.29321	.95605	.30985	.95079	.32639	.94523	57
4	.25994	.96562	.27676	.96094	.29348	.95596	.31012	.95070	.32667	.94514	56
5	.26022	.96555	.27704	.96086	.29376	.95588	.31040	.95061	.32694	.94504	55
6	.26050	.96547	.27731	.96078	.29404	.95579	.31068	.95052	.32722	.94495	54
7	.26079	.96540	.27759	.96070	.29432	.95571	.31095	.95043	.32749	.94485	53
8	.26107	.96532	.27787	.96062	.29460	.95562	.31123	.95033	.32777	.94476	52
9	.26135	.96524	.27815	.96054	.29487	.95554	.31151	.95024	.32804	.94466	51
10	.26163	.96517	.27843	.96046	.29515	.95545	.31178	.95015	.32832	.94457	50
11	.26191	.96509	.27871	.96037	.29543	.95536	.31206	.95006	.32859	.94447	49
12	.26219	.96502	.27899	.96029	.29571	.95528	.31233	.94997	.32887	.94438	48
13	.26247	.96494	.27927	.96021	.29599	.95519	.31261	.94988	.32914	.94428	47
14	.26275	.96486	.27955	.96013	.29626	.95511	.31289	.94979	.32942	.94418	46
15	.26303	.96479	.27983	.96005	.29654	.95502	.31316	.94970	.32969	.94409	45
16	.26331	.96471	.28011	.95997	.29682	.95493	.31344	.94961	.32997	.94399	44
17	.26359	.96463	.28039	.95989	.29710	.95485	.31372	.94952	.33024	.94390	43
18	.26387	.96456	.28067	.95981	.29737	.95476	.31399	.94943	.33051	.94380	42
19	.26415	.96448	.28095	.95972	.29765	.95467	.31427	.94933	.33079	.94370	41
20	.26443	.96440	.28123	.95964	.29793	.95459	.31454	.94924	.33106	.94361	40
21	.26471	.96433	.28150	.95956	.29821	.95450	.31482	.94915	.33134	.94351	39
22	.26500	.96425	.28178	.95948	.29849	.95441	.31510	.94906	.33161	.94342	38
23	.26528	.96417	.28206	.95940	.29876	.95433	.31537	.94897	.33189	.94332	37
24	.26556	.96410	.28234	.95931	.29904	.95424	.31565	.94888	.33216	.94322	36
25	.26584	.96402	.28262	.95923	.29932	.95415	.31593	.94878	.33244	.94313	35
26	.26612	.96394	.28290	.95915	.29960	.95407	.31620	.94869	.33271	.94303	34
27	.26640	.96386	.28318	.95907	.29987	.95398	.31648	.94860	.33298	.94293	33
28	.26668	.96379	.28346	.95898	.30015	.95389	.31675	.94851	.33326	.94284	32
29	.26696	.96371	.28374	.95890	.30043	.95380	.31703	.94842	.33353	.94274	31
30	.26724	.96363	.28402	.95882	.30071	.95372	.31730	.94832	.33381	.94264	30
31	.26752	.96355	.28429	.95874	.30098	.95363	.31758	.94823	.33408	.94254	29
32	.26780	.96347	.28457	.95865	.30126	.95354	.31786	.94814	.33436	.94245	28
33	.26808	.96340	.28485	.95857	.30154	.95346	.31813	.94805	.33463	.94235	27
34	.26836	.96332	.28513	.95849	.30182	.95337	.31841	.94795	.33490	.94225	26
35	.26864	.96324	.28541	.95841	.30209	.95328	.31868	.94786	.33518	.94215	25
36	.26892	.96316	.28569	.95832	.30237	.95319	.31896	.94777	.33545	.94206	24
37	.26920	.96308	.28597	.95824	.30265	.95310	.31923	.94768	.33573	.94196	23
38	.26948	.96301	.28625	.95816	.30292	.95301	.31951	.94758	.33600	.94186	22
39	.26976	.96293	.28652	.95807	.30320	.95293	.31979	.94749	.33627	.94176	21
40	.27004	.96285	.28680	.95799	.30348	.95284	.32006	.94740	.33655	.94167	20
41	.27032	.96277	.28708	.95791	.30376	.95275	.32034	.94730	.33682	.94157	19
42	.27060	.96269	.28736	.95782	.30403	.95266	.32061	.94721	.33710	.94147	18
43	.27088	.96261	.28764	.95774	.30431	.95257	.32089	.94712	.33737	.94137	17
44	.27116	.96253	.28792	.95766	.30459	.95248	.32116	.94702	.33764	.94127	16
45	.27144	.96246	.28820	.95757	.30486	.95240	.32144	.94693	.33792	.94118	15
46	.27172	.96238	.28847	.95749	.30514	.95231	.32171	.94684	.33819	.94108	14
47	.27200	.96230	.28875	.95740	.30542	.95222	.32199	.94674	.33846	.94098	13
48	.27228	.96222	.28903	.95732	.30570	.95213	.32227	.94665	.33874	.94088	12
49	.27256	.96214	.28931	.95724	.30597	.95204	.32254	.94656	.33901	.94078	11
50	.27284	.96206	.28959	.95715	.30625	.95195	.32282	.94646	.33929	.94068	10
51	.27312	.96198	.28987	.95707	.30653	.95186	.32309	.94637	.33956	.94058	9
52	.27340	.96190	.29015	.95698	.30680	.95177	.32337	.94627	.33983	.94049	8
53	.27368	.96182	.29042	.95690	.30708	.95168	.32364	.94618	.34011	.94039	7
54	.27396	.96174	.29070	.95681	.30736	.95159	.32392	.94609	.34038	.94029	6
55	.27424	.96166	.29098	.95673	.30763	.95150	.32419	.94599	.34065	.94019	5
56	.27452	.96158	.29126	.95664	.30791	.95142	.32447	.94590	.34093	.94009	4
57	.27480	.96150	.29154	.95656	.30819	.95133	.32474	.94580	.34120	.93999	3
58	.27508	.96142	.29182	.95647	.30846	.95124	.32502	.94571	.34147	.93989	2
59	.27536	.96134	.29209	.95639	.30874	.95115	.32529	.94561	.34175	.93979	1
60	.27564	.96126	.29237	.95630	.30902	.95106	.32557	.94552	.34202	.93969	0
	Cosine	Sine	Cosine	Sine	Cosine	Sine	Cosine	Sine	Cosine	Sine	′
	74°		73°		72°		71°		70°		

′	20°		21°		22°		23°		24°		′
	Sine	Cosine	Sine	Cosine	Sine	Cosine	Sine	Cosine	Sine	Cosine	
0	.34202	.93969	.35837	.93358	.37461	.92718	.39073	.92050	.40674	.91355	60
1	34229	93959	35864	93348	37488	92707	39100	92039	40700	91343	59
2	34257	93949	35891	93337	37515	92697	39127	92028	40727	91331	58
3	34284	93939	35918	93327	37542	92686	39153	92016	40753	91319	57
4	34311	93929	35945	93316	37569	92675	39180	92005	40780	91307	56
5	34339	93919	35973	93306	37595	92664	39207	91994	40806	91295	55
6	34366	93909	36000	93295	37622	92653	39234	91982	40833	91283	54
7	34393	93899	36027	93285	37649	92642	39260	91971	40860	91272	53
8	34421	93889	36054	93274	37676	92631	39287	91959	40886	91260	52
9	34448	93879	36081	93264	37703	92620	39314	91948	40913	91248	51
10	34475	93869	36108	93253	37730	92609	39341	91936	40939	91236	50
11	34503	93859	36135	93243	37757	92598	39367	91925	40966	91224	49
12	34530	93849	36162	93232	37784	92587	39394	91914	40992	91212	48
13	34557	93839	36190	93222	37811	92576	39421	91902	41019	91200	47
14	34584	93829	36217	93211	37838	92565	39448	91891	41045	91188	46
15	34612	93819	36244	93201	37865	92554	39474	91879	41072	91176	45
16	34639	93809	36271	93190	37892	92543	39501	91868	41098	91164	44
17	34666	93799	36298	93180	37919	92532	39528	91856	41125	91152	43
18	34694	93789	36325	93169	37946	92521	39555	91845	41151	91140	42
19	34721	93779	36352	93159	37973	92510	39581	91833	41178	91128	41
20	34748	93769	36379	93148	37999	92499	39608	91822	41204	91116	40
21	34775	93759	36406	93137	38026	92488	39635	91810	41231	91104	39
22	34803	93748	36434	93127	38053	92477	39661	91799	41257	91092	38
23	34830	93738	36461	93116	38080	92466	39688	91787	41284	91080	37
24	34857	93728	36488	93106	38107	92455	39715	91775	41310	91068	36
25	34884	93718	36515	93095	38134	92444	39741	91764	41337	91056	35
26	34912	93708	36542	93084	38161	92432	39768	91752	41363	91044	34
27	34939	93698	36569	93074	38188	92421	39795	91741	41390	91032	33
28	34966	93688	36596	93063	38215	92410	39822	91729	41416	91020	32
29	34993	93677	36623	93052	38241	92399	39848	91718	41443	91008	31
30	35021	93667	36650	93042	38268	92388	39875	91706	41469	90996	30
31	35048	93657	36677	93031	38295	92377	39902	91694	41496	90984	29
32	35075	93647	36704	93020	38322	92366	39928	91683	41522	90972	28
33	35102	93637	36731	93010	38349	92355	39955	91671	41549	90960	27
34	35130	93626	36758	92999	38376	92343	39982	91660	41575	90948	26
35	35157	93616	36785	92988	38403	92332	40008	91648	41602	90936	25
36	35184	93606	36812	92978	38430	92321	40035	91636	41628	90924	24
37	35211	93596	36839	92967	38456	92310	40062	91625	41655	90911	23
38	35239	93585	36867	92956	38483	92299	40088	91613	41681	90899	22
39	35266	93575	36894	92945	38510	92287	40115	91601	41707	90887	21
40	35293	93565	36921	92935	38537	92276	40141	91590	41734	90875	20
41	35320	93555	36948	92924	38564	92265	40168	91578	41760	90863	19
42	35347	93544	36975	92913	38591	92254	40195	91566	41787	90851	18
43	35375	93534	37002	92902	38617	92243	40221	91555	41813	90839	17
44	35402	93524	37029	92892	38644	92231	40248	91543	41840	90826	16
45	35429	93514	37056	92881	38671	92220	40275	91531	41866	90814	15
46	35456	93503	37083	92870	38698	92209	40301	91519	41892	90802	14
47	35484	93493	37110	92859	38725	92198	40328	91508	41919	90790	13
48	35511	93483	37137	92849	38752	92186	40355	91496	41945	90778	12
49	35538	93472	37164	92838	38778	92175	40381	91484	41972	90766	11
50	35565	93462	37192	92827	38805	92164	40408	91472	41998	90753	10
51	35592	93452	37218	92816	38832	92152	40434	91461	42024	90741	9
52	35619	93441	37245	92805	38859	92141	40461	91449	42051	90729	8
53	35647	93431	37272	92794	38886	92130	40488	91437	42077	90717	7
54	35674	93420	37299	92784	38912	92119	40514	91425	42104	90704	6
55	35701	93410	37326	92773	38939	92107	40541	91414	42130	90692	5
56	35728	93400	37353	92762	38966	92096	40567	91402	42156	90680	4
57	35755	93389	37380	92751	38993	92085	40594	91390	42183	90668	3
58	35782	93379	37407	92740	39020	92073	40621	91378	42209	90655	2
59	35810	93368	37434	92729	39046	92062	40647	91367	42235	90643	1
60	35837	93358	37461	92718	39073	92050	40674	91355	42262	90631	0
′	Cosine	Sine	Cosine	Sine	Cosine	Sine	Cosine	Sine	Cosine	Sine	′
	69°		68°		67°		66°		65°		

′	25°		26°		27°		28°		29°		′
	Sine	Cosine	Sine	Cosine	Sine	Cosine	Sine	Cosine	Sine	Cosine	
0	.42262	.90631	.43837	.89879	.45399	.89101	.46947	.88295	.48481	.87462	60
1	.42288	.90618	.43863	.89867	.45425	.89087	.46973	.88281	.48506	.87448	59
2	.42315	.90606	.43889	.89854	.45451	.89074	.46999	.88267	.48532	.87434	58
3	.42341	.90594	.43916	.89841	.45477	.89061	.47024	.88254	.48557	.87420	57
4	.42367	.90582	.43942	.89828	.45503	.89048	.47050	.88240	.48583	.87406	56
5	.42394	.90569	.43968	.89816	.45529	.89035	.47076	.88226	.48608	.87391	55
6	.42420	.90557	.43994	.89803	.45554	.89021	.47101	.88213	.48634	.87377	54
7	.42446	.90545	.44020	.89790	.45580	.89008	.47127	.88199	.48659	.87363	53
8	.42473	.90532	.44046	.89777	.45606	.88995	.47153	.88185	.48684	.87349	52
9	.42499	.90520	.44072	.89764	.45632	.88981	.47178	.88172	.48710	.87335	51
10	.42525	.90507	.44098	.89752	.45658	.88968	.47204	.88158	.48735	.87321	50
11	.42552	.90495	.44124	.89739	.45684	.88955	.47229	.88144	.48761	.87306	49
12	.42578	.90483	.44151	.89726	.45710	.88942	.47255	.88130	.48786	.87292	48
13	.42604	.90470	.44177	.89713	.45736	.88928	.47281	.88117	.48811	.87278	47
14	.42631	.90458	.44203	.89700	.45762	.88915	.47306	.88103	.48837	.87264	46
15	.42657	.90446	.44229	.89687	.45787	.88902	.47332	.88089	.48862	.87250	45
16	.42683	.90433	.44255	.89674	.45813	.88888	.47358	.88075	.48888	.87235	44
17	.42709	.90421	.44281	.89662	.45839	.88875	.47383	.88062	.48913	.87221	43
18	.42736	.90408	.44307	.89649	.45865	.88862	.47409	.88048	.48938	.87207	42
19	.42762	.90396	.44333	.89636	.45891	.88848	.47434	.88034	.48964	.87193	41
20	.42788	.90383	.44359	.89623	.45917	.88835	.47460	.88020	.48989	.87178	40
21	.42815	.90371	.44385	.89610	.45942	.88822	.47486	.88006	.49014	.87164	39
22	.42841	.90358	.44411	.89597	.45968	.88808	.47511	.87993	.49040	.87150	38
23	.42867	.90346	.44437	.89584	.45994	.88795	.47537	.87979	.49065	.87136	37
24	.42894	.90334	.44464	.89571	.46020	.88782	.47562	.87965	.49090	.87121	36
25	.42920	.90321	.44490	.89558	.46046	.88768	.47588	.87951	.49116	.87107	35
26	.42946	.90309	.44516	.89545	.46072	.88755	.47614	.87937	.49141	.87093	34
27	.42972	.90296	.44542	.89532	.46097	.88741	.47639	.87923	.49166	.87079	33
28	.42999	.90284	.44568	.89519	.46123	.88728	.47665	.87909	.49192	.87064	32
29	.43025	.90271	.44594	.89506	.46149	.88715	.47690	.87896	.49217	.87050	31
30	.43051	.90259	.44620	.89493	.46175	.88701	.47716	.87882	.49242	.87036	30
31	.43077	.90246	.44646	.89480	.46201	.88688	.47741	.87868	.49268	.87021	29
32	.43104	.90233	.44672	.89467	.46226	.88674	.47767	.87854	.49293	.87007	28
33	.43130	.90221	.44698	.89454	.46252	.88661	.47793	.87840	.49318	.86993	27
34	.43156	.90208	.44724	.89441	.46278	.88647	.47818	.87826	.49344	.86978	26
35	.43182	.90196	.44750	.89428	.46304	.88634	.47844	.87812	.49369	.86964	25
36	.43209	.90183	.44776	.89415	.46330	.88620	.47869	.87798	.49394	.86949	24
37	.43235	.90171	.44802	.89402	.46355	.88607	.47895	.87784	.49419	.86935	23
38	.43261	.90158	.44828	.89389	.46381	.88593	.47920	.87770	.49445	.86921	22
39	.43287	.90146	.44854	.89376	.46407	.88580	.47946	.87756	.49470	.86906	21
40	.43313	.90133	.44880	.89363	.46433	.88566	.47971	.87743	.49495	.86892	20
41	.43340	.90120	.44906	.89350	.46458	.88553	.47997	.87729	.49521	.86878	19
42	.43366	.90108	.44932	.89337	.46484	.88539	.48022	.87715	.49546	.86863	18
43	.43392	.90095	.44958	.89324	.46510	.88526	.48048	.87701	.49571	.86849	17
44	.43418	.90082	.44984	.89311	.46536	.88512	.48073	.87687	.49596	.86834	16
45	.43445	.90070	.45010	.89298	.46561	.88499	.48099	.87673	.49622	.86820	15
46	.43471	.90057	.45036	.89285	.46587	.88485	.48124	.87659	.49647	.86805	14
47	.43497	.90045	.45062	.89272	.46613	.88472	.48150	.87645	.49672	.86791	13
48	.43523	.90032	.45088	.89259	.46639	.88458	.48175	.87631	.49697	.86777	12
49	.43549	.90019	.45114	.89245	.46664	.88445	.48201	.87617	.49723	.86762	11
50	.43575	.90007	.45140	.89232	.46690	.88431	.48226	.87603	.49748	.86748	10
51	.43602	.89994	.45166	.89219	.46716	.88417	.48252	.87589	.49773	.86733	9
52	.43628	.89981	.45192	.89206	.46741	.88404	.48277	.87575	.49798	.86719	8
53	.43654	.89968	.45218	.89193	.46767	.88390	.48303	.87561	.49824	.86704	7
54	.43680	.89956	.45243	.89180	.46793	.88377	.48328	.87546	.49849	.86690	6
55	.43706	.89943	.45269	.89167	.46818	.88363	.48354	.87532	.49874	.86675	5
56	.43733	.89930	.45295	.89153	.46844	.88349	.48379	.87518	.49899	.86661	4
57	.43759	.89918	.45321	.89140	.46869	.88336	.48405	.87504	.49924	.86646	3
58	.43785	.89905	.45347	.89127	.46895	.88322	.48430	.87490	.49950	.86632	2
59	.43811	.89892	.45373	.89114	.46921	.88308	.48456	.87476	.49975	.86617	1
60	.43837	.89879	.45399	.89101	.46947	.88295	.48481	.87462	.50000	.86603	0
′	Cosine	Sine	Cosine	Sine	Cosine	Sine	Cosine	Sine	Cosine	Sine	′
	64°		63°		62°		61°		60°		

′	30°		31°		32°		33°		34°		′
	Sine	Cosine	Sine	Cosine	Sine	Cosine	Sine	Cosine	Sine	Cosine	
0	.50000	.86603	.51504	.85717	.52992	.84805	.54464	.83867	.55919	.82904	60
1	.50025	.86588	.51529	.85702	.53017	.84789	.54488	.83851	.55943	.82887	59
2	.50050	.86573	.51554	.85687	.53041	.84774	.54513	.83835	.55968	.82871	58
3	.50076	.86559	.51579	.85672	.53066	.84759	.54537	.83819	.55992	.82855	57
4	.50101	.86544	.51604	.85657	.53091	.84743	.54561	.83804	.56016	.82839	56
5	.50126	.86530	.51628	.85642	.53115	.84728	.54586	.83788	.56041	.82822	55
6	.50151	.86515	.51653	.85627	.53140	.84712	.54610	.83772	.56065	.82806	54
7	.50176	.86501	.51678	.85612	.53164	.84697	.54635	.83756	.56088	.82790	53
8	.50201	.86486	.51703	.85597	.53189	.84681	.54659	.83740	.56112	.82773	52
9	.50227	.86471	.51728	.85582	.53214	.84666	.54683	.83724	.56136	.82757	51
10	.50252	.86457	.51753	.85567	.53238	.84650	.54708	.83708	.56160	.82741	50
11	.50277	.86442	.51778	.85551	.53263	.84635	.54732	.83692	.56184	.82724	49
12	.50302	.86427	.51803	.85536	.53288	.84619	.54756	.83676	.56208	.82708	48
13	.50327	.86413	.51828	.85521	.53312	.84604	.54781	.83660	.56232	.82692	47
14	.50352	.86398	.51852	.85506	.53337	.84588	.54805	.83645	.56256	.82675	46
15	.50377	.86384	.51877	.85491	.53361	.84573	.54829	.83629	.56280	.82659	45
16	.50403	.86369	.51902	.85476	.53386	.84557	.54854	.83613	.56305	.82643	44
17	.50428	.86354	.51927	.85461	.53411	.84542	.54878	.83597	.56329	.82626	43
18	.50453	.86340	.51952	.85446	.53435	.84526	.54902	.83581	.56353	.82610	42
19	.50478	.86325	.51977	.85431	.53460	.84511	.54927	.83565	.56377	.82593	41
20	.50503	.86310	.52002	.85416	.53484	.84495	.54951	.83549	.56401	.82577	40
21	.50528	.86295	.52026	.85401	.53509	.84480	.54975	.83533	.56425	.82561	39
22	.50553	.86281	.52051	.85385	.53534	.84464	.54999	.83517	.56449	.82544	38
23	.50578	.86266	.52076	.85370	.53558	.84448	.55024	.83501	.56473	.82528	37
24	.50603	.86251	.52101	.85355	.53583	.84433	.55048	.83485	.56497	.82511	36
25	.50628	.86237	.52126	.85340	.53607	.84417	.55072	.83469	.56521	.82495	35
26	.50654	.86222	.52151	.85325	.53632	.84402	.55097	.83453	.56545	.82478	34
27	.50679	.86207	.52175	.85310	.53656	.84386	.55121	.83437	.56569	.82462	33
28	.50704	.86192	.52200	.85294	.53681	.84370	.55145	.83421	.56593	.82446	32
29	.50729	.86178	.52225	.85279	.53705	.84355	.55169	.83405	.56617	.82429	31
30	.50754	.86163	.52250	.85264	.53730	.84339	.55194	.83389	.56641	.82413	30
31	.50779	.86148	.52275	.85249	.53754	.84324	.55218	.83373	.56665	.82396	29
32	.50804	.86133	.52299	.85234	.53779	.84308	.55242	.83356	.56689	.82380	28
33	.50829	.86119	.52324	.85218	.53804	.84292	.55266	.83340	.56713	.82363	27
34	.50854	.86104	.52349	.85203	.53828	.84277	.55291	.83324	.56736	.82347	26
35	.50879	.86089	.52374	.85188	.53853	.84261	.55315	.83308	.56760	.82330	25
36	.50904	.86074	.52399	.85173	.53877	.84245	.55339	.83292	.56784	.82314	24
37	.50929	.86059	.52423	.85157	.53902	.84230	.55363	.83276	.56808	.82297	23
38	.50954	.86045	.52448	.85142	.53926	.84214	.55388	.83260	.56832	.82281	22
39	.50979	.86030	.52473	.85127	.53951	.84198	.55412	.83244	.56856	.82264	21
40	.51004	.86015	.52498	.85112	.53975	.84182	.55436	.83228	.56880	.82248	20
41	.51029	.86000	.52522	.85096	.54000	.84167	.55460	.83212	.56904	.82231	19
42	.51054	.85985	.52547	.85081	.54024	.84151	.55484	.83195	.56928	.82214	18
43	.51079	.85970	.52572	.85066	.54049	.84135	.55509	.83179	.56952	.82198	17
44	.51104	.85956	.52597	.85051	.54073	.84120	.55533	.83163	.56976	.82181	16
45	.51129	.85941	.52621	.85035	.54097	.84104	.55557	.83147	.57000	.82165	15
46	.51154	.85926	.52646	.85020	.54122	.84088	.55581	.83131	.57024	.82148	14
47	.51179	.85911	.52672	.85005	.54146	.84072	.55605	.83115	.57047	.82132	13
48	.51204	.85896	.52696	.84989	.54171	.84057	.55630	.83098	.57071	.82115	12
49	.51229	.85881	.52721	.84974	.54195	.84041	.55654	.83082	.57095	.82098	11
50	.51254	.85866	.52745	.84959	.54220	.84025	.55678	.83066	.57119	.82082	10
51	.51279	.85851	.52770	.84943	.54244	.84009	.55702	.83050	.57143	.82065	9
52	.51304	.85836	.52794	.84928	.54269	.83994	.55726	.83034	.57167	.82048	8
53	.51329	.85821	.52819	.84913	.54293	.83978	.55750	.83017	.57191	.82032	7
54	.51354	.85806	.52844	.84897	.54317	.83962	.55775	.83001	.57215	.82015	6
55	.51379	.85792	.52869	.84882	.54342	.83946	.55799	.82985	.57238	.81999	5
56	.51404	.85777	.52893	.84866	.54366	.83930	.55823	.82969	.57262	.81982	4
57	.51429	.85762	.52918	.84851	.54391	.83915	.55847	.82953	.57286	.81965	3
58	.51454	.85747	.52943	.84836	.54415	.83899	.55871	.82936	.57310	.81949	2
59	.51479	.85732	.52967	.84820	.54440	.83883	.55895	.82920	.57334	.81932	1
60	.51504	.85717	.52992	.84805	.54464	.83867	.55919	.82904	.57358	.81915	0
′	Cosine	Sine	Cosine	Sine	Cosine	Sine	Cosine	Sine	Cosine	Sine	′
	59°		58°		57°		56°		55°		

′	35°		36°		37°		38°		39°		′
	Sine	Cosine	Sine	Cosine	Sine	Cosine	Sine	Cosine	Sine	Cosine	
0	.57358	.81915	.58779	.80902	.60182	.79864	.61566	.78801	.62932	.77715	60
1	.57381	.81899	.58802	.80885	.60205	.79846	.61589	.78783	.62955	.77696	59
2	.57405	.81882	.58826	.80867	.60228	.79829	.61612	.78765	.62977	.77678	58
3	.57429	.81865	.58849	.80850	.60251	.79811	.61635	.78747	.63000	.77660	57
4	.57453	.81848	.58873	.80833	.60274	.79793	.61658	.78729	.63022	.77641	56
5	.57477	.81832	.58896	.80816	.60298	.79776	.61681	.78711	.63045	.77623	55
6	.57501	.81815	.58920	.80799	.60321	.79758	.61704	.78694	.63068	.77605	54
7	.57524	.81798	.58943	.80782	.60344	.79741	.61726	.78676	.63090	.77586	53
8	.57548	.81782	.58967	.80765	.60367	.79723	.61749	.78658	.63113	.77568	52
9	.57572	.81765	.58990	.80748	.60390	.79706	.61772	.78640	.63135	.77550	51
10	.57596	.81748	.59014	.80730	.60414	.79688	.61795	.78622	.63158	.77531	50
11	.57619	.81731	.59037	.80713	.60437	.79671	.61818	.78604	.63180	.77513	49
12	.57643	.81714	.59061	.80696	.60460	.79653	.61841	.78586	.63203	.77494	48
13	.57667	.81698	.59084	.80679	.60483	.79635	.61864	.78568	.63225	.77476	47
14	.57691	.81681	.59108	.80662	.60506	.79618	.61887	.78550	.63248	.77458	46
15	.57715	.81664	.59131	.80644	.60529	.79600	.61909	.78532	.63271	.77439	45
16	.57738	.81647	.59154	.80627	.60553	.79583	.61932	.78514	.63293	.77421	44
17	.57762	.81631	.59178	.80610	.60576	.79565	.61955	.78496	.63316	.77402	43
18	.57786	.81614	.59201	.80593	.60599	.79547	.61978	.78478	.63338	.77384	42
19	.57810	.81597	.59225	.80576	.60622	.79530	.62001	.78460	.63361	.77366	41
20	.57833	.81580	.59248	.80558	.60645	.79512	.62024	.78442	.63383	.77347	40
21	.57857	.81563	.59272	.80541	.60668	.79494	.62046	.78424	.63406	.77329	39
22	.57881	.81546	.59295	.80524	.60691	.79477	.62069	.78405	.63428	.77310	38
23	.57904	.81530	.59318	.80507	.60714	.79459	.62092	.78387	.63451	.77292	37
24	.57928	.81513	.59342	.80489	.60738	.79441	.62115	.78369	.63473	.77273	36
25	.57952	.81496	.59365	.80472	.60761	.79424	.62138	.78351	.63496	.77255	35
26	.57976	.81479	.59389	.80455	.60784	.79406	.62160	.78333	.63518	.77236	34
27	.57999	.81462	.59412	.80438	.60807	.79388	.62183	.78315	.63540	.77218	33
28	.58023	.81445	.59436	.80420	.60830	.79371	.62206	.78297	.63563	.77199	32
29	.58047	.81428	.59459	.80403	.60853	.79353	.62229	.78279	.63585	.77181	31
30	.58070	.81412	.59482	.80386	.60876	.79335	.62251	.78261	.63608	.77162	30
31	.58094	.81395	.59506	.80368	.60899	.79318	.62274	.78243	.63630	.77144	29
32	.58118	.81378	.59529	.80351	.60922	.79300	.62297	.78225	.63653	.77125	28
33	.58141	.81361	.59552	.80334	.60945	.79282	.62320	.78206	.63675	.77107	27
34	.58165	.81344	.59576	.80316	.60968	.79264	.62342	.78188	.63698	.77088	26
35	.58189	.81327	.59599	.80299	.60991	.79247	.62365	.78170	.63720	.77070	25
36	.58212	.81310	.59622	.80282	.61015	.79229	.62388	.78152	.63742	.77051	24
37	.58236	.81293	.59646	.80264	.61038	.79211	.62411	.78134	.63765	.77033	23
38	.58260	.81276	.59669	.80247	.61061	.79193	.62433	.78116	.63787	.77014	22
39	.58283	.81259	.59693	.80230	.61084	.79176	.62456	.78098	.63810	.76996	21
40	.58307	.81242	.59716	.80212	.61107	.79158	.62479	.78079	.63832	.76977	20
41	.58330	.81225	.59740	.80195	.61130	.79140	.62502	.78061	.63854	.76959	19
42	.58354	.81208	.59763	.80178	.61153	.79122	.62524	.78043	.63877	.76940	18
43	.58378	.81191	.59787	.80160	.61176	.79105	.62547	.78025	.63899	.76921	17
44	.58401	.81174	.59810	.80143	.61199	.79087	.62570	.78007	.63922	.76903	16
45	.58425	.81157	.59834	.80125	.61222	.79069	.62592	.77988	.63944	.76884	15
46	.58449	.81140	.59857	.80108	.61245	.79051	.62615	.77970	.63966	.76866	14
47	.58472	.81123	.59881	.80091	.61268	.79033	.62638	.77952	.63989	.76847	13
48	.58496	.81106	.59904	.80073	.61291	.79016	.62660	.77934	.64011	.76828	12
49	.58519	.81089	.59928	.80056	.61314	.78998	.62683	.77916	.64033	.76810	11
50	.58543	.81072	.59951	.80038	.61337	.78980	.62706	.77897	.64056	.76791	10
51	.58567	.81055	.59975	.80021	.61360	.78962	.62728	.77879	.64078	.76772	9
52	.58590	.81038	.59998	.80003	.61384	.78944	.62751	.77861	.64100	.76754	8
53	.58614	.81021	.60021	.79986	.61406	.78926	.62774	.77843	.64123	.76735	7
54	.58637	.81004	.60045	.79968	.61429	.78908	.62797	.77824	.64145	.76717	6
55	.58661	.80987	.60068	.79951	.61451	.78891	.62819	.77806	.64167	.76698	5
56	.58684	.80970	.60091	.79934	.61474	.78873	.62842	.77788	.64190	.76679	4
57	.58708	.80953	.60114	.79916	.61497	.78855	.62864	.77769	.64212	.76661	3
58	.58731	.80936	.60138	.79899	.61520	.78837	.62887	.77751	.64234	.76642	2
59	.58755	.80919	.60161	.79881	.61543	.78819	.62909	.77733	.64256	.76623	1
60	.58778	.80902	.60184	.79864	.61566	.78801	.62932	.77715	.64279	.76604	0
′	Cosine	Sine	Cosine	Sine	Cosine	Sine	Cosine	Sine	Cosine	Sine	′
	54°		53°		52°		51°		50°		

′	40°		41°		42°		43°		44°		′
	Sine	Cosine	Sine	Cosine	Sine	Cosine	Sine	Cosine	Sine	Cosine	
0	.64279	.76604	.65606	.75471	.66913	.74314	.68200	.73135	.69466	.71934	60
1	.64301	.76587	.65628	.75452	.66935	.74295	.68221	.73116	.69487	.71914	59
2	.64323	.76567	.65650	.75433	.66956	.74276	.68242	.73096	.69508	.71894	58
3	.64346	.76548	.65672	.75414	.66978	.74256	.68264	.73076	.69529	.71873	57
4	.64368	.76530	.65694	.75395	.66999	.74237	.68285	.73056	.69549	.71853	56
5	.64390	.76511	.65716	.75375	.67021	.74217	.68306	.73036	.69570	.71833	55
6	.64412	.76492	.65738	.75356	.67043	.74198	.68327	.73016	.69591	.71813	54
7	.64435	.76473	.65759	.75337	.67064	.74178	.68349	.72996	.69612	.71792	53
8	.64457	.76455	.65781	.75318	.67086	.74159	.68370	.72976	.69633	.71772	52
9	.64479	.76437	.65803	.75299	.67107	.74139	.68391	.72957	.69654	.71752	51
10	.64501	.76417	.65823	.75280	.67129	.74120	.68412	.72937	.69675	.71732	50
11	.64524	.76398	.65847	.75261	.67151	.74100	.68434	.72917	.69696	.71711	49
12	.64546	.76380	.65869	.75241	.67172	.74080	.68455	.72897	.69717	.71691	48
13	.64568	.76361	.65891	.75222	.67194	.74061	.68476	.72877	.69737	.71671	47
14	.64590	.76342	.65913	.75203	.67215	.74041	.68497	.72857	.69758	.71650	46
15	.64612	.76323	.65935	.75184	.67237	.74022	.68518	.72837	.69779	.71631	45
16	.64635	.76304	.65950	.75165	.67258	.74002	.68539	.72817	.69800	.71610	44
17	.64657	.76286	.65978	.75146	.67280	.73983	.68561	.72797	.69821	.71590	43
18	.64679	.76267	.66000	.75126	.67301	.73963	.68582	.72777	.69842	.71569	42
19	.64701	.76248	.66022	.75107	.67323	.73944	.68603	.72757	.69862	.71549	41
20	.64723	.76229	.66044	.75088	.67344	.73924	.68624	.72737	.69883	.71529	40
21	.64746	.76210	.66066	.75069	.67366	.73904	.68645	.72717	.69904	.71508	39
22	.64768	.76192	.66088	.75050	.67387	.73885	.68666	.72697	.69925	.71488	38
23	.64790	.76173	.66109	.75031	.67409	.73865	.68688	.72677	.69946	.71468	37
24	.64812	.76154	.66131	.75011	.67430	.73846	.68709	.72657	.69966	.71447	36
25	.64834	.76135	.66153	.74992	.67452	.73826	.68730	.72637	.69987	.71427	35
26	.64856	.76116	.66175	.74971	.67473	.73806	.68751	.72617	.70008	.71407	34
27	.64878	.76097	.66197	.74953	.67495	.73787	.68772	.72597	.70029	.71386	33
28	.64901	.76078	.66218	.74934	.67516	.73767	.68793	.72577	.70049	.71366	32
29	.64923	.76059	.66240	.74915	.67538	.73747	.68814	.72557	.70070	.71345	31
30	.64945	.76041	.66262	.74896	.67559	.73728	.68835	.72537	.70091	.71325	30
31	.64967	.76022	.66284	.74876	.67580	.73708	.68857	.72517	.70112	.71303	29
32	.64989	.76003	.66306	.74857	.67602	.73688	.68878	.72497	.70132	.71284	28
33	.65011	.75984	.66327	.74838	.67623	.73669	.68899	.72477	.70153	.71264	27
34	.65033	.75965	.66349	.74818	.67645	.73649	.68920	.72457	.70174	.71243	26
35	.65055	.75946	.66371	.74799	.67666	.73629	.68941	.72437	.70195	.71223	25
36	.65077	.75927	.66393	.74780	.67688	.73610	.68962	.72417	.70215	.71203	24
37	.65101	.75908	.66414	.74760	.67709	.73590	.68983	.72397	.70236	.71182	23
38	.65122	.75889	.66436	.74741	.67730	.73570	.69004	.72377	.70257	.71162	22
39	.65144	.75870	.66458	.74722	.67752	.73551	.69025	.72357	.70277	.71141	21
40	.65166	.75851	.66480	.74703	.67773	.73531	.69046	.72337	.70298	.71121	20
41	.65188	.75832	.66501	.74683	.67795	.73511	.69067	.72317	.70319	.71100	19
42	.65210	.75813	.66523	.74664	.67816	.73491	.69088	.72297	.70339	.71080	18
43	.65232	.75794	.66545	.74644	.67837	.73472	.69109	.72277	.70360	.71059	17
44	.65254	.75775	.66566	.74625	.67859	.73452	.69131	.72257	.70381	.71039	16
45	.65276	.75756	.66588	.74606	.67880	.73432	.69151	.72237	.70401	.71019	15
46	.65298	.75738	.66610	.74586	.67901	.73413	.69172	.72217	.70422	.70998	14
47	.65320	.75719	.66632	.74567	.67923	.73393	.69193	.72197	.70443	.70978	13
48	.65342	.75700	.66653	.74548	.67944	.73373	.69214	.72177	.70463	.70957	12
49	.65364	.75680	.66675	.74528	.67965	.73353	.69235	.72157	.70484	.70937	11
50	.65386	.75661	.66697	.74509	.67987	.73333	.69256	.72136	.70505	.70916	10
51	.65408	.75642	.66719	.74489	.68008	.73314	.69277	.72116	.70525	.70896	9
52	.65430	.75623	.66740	.74470	.68029	.73294	.69296	.72096	.70546	.70875	8
53	.65452	.75604	.66762	.74451	.68051	.73274	.69319	.72075	.70567	.70855	7
54	.65474	.75585	.66783	.74431	.68072	.73254	.69340	.72055	.70587	.70834	6
55	.65496	.75566	.66805	.74412	.68093	.73234	.69361	.72035	.70608	.70813	5
56	.65518	.75547	.66827	.74392	.68115	.73215	.69382	.72015	.70628	.70793	4
57	.65540	.75528	.66848	.74373	.68136	.73195	.69403	.71995	.70649	.70772	3
58	.65562	.75509	.66870	.74353	.68157	.73175	.69424	.71974	.70667	.70752	2
59	.65584	.75490	.66891	.74334	.68179	.73155	.69445	.71954	.70690	.70731	1
60	.65606	.75471	.66913	.74314	.68200	.73135	.69466	.71934	.70711	.70711	0
′	Cosine	Sine	Cosine	Sine	Cosine	Sine	Cosine	Sine	Cosine	Sine	′
	49°		48°		47°		46°		45°		

′	0°		1°		2°		3°		4°		′
	Tang	Cotang	Tang	Cotang	Tang	Cotang	Tang	Cotang	Tang	Cotang	
0	.00000	Infin	.01746	57.2900	.03492	28.6363	.05241	19.0811	.06993	14.3007	60
1	.00029	3437 75	.01775	56.3506	.03521	28.3994	.05270	18 9755	.07022	14 2411	59
2	.00058	1718 87	.01804	55.4415	.03550	28.1664	.05299	18 8711	.07051	14.1821	58
3	.00087	1145.92	.01833	54.5613	.03579	27 9372	.05328	18 7678	.07080	14 1235	57
4	.00116	859 436	.01862	53 7086	.03609	27.7117	.05357	18.6656	.07110	14.0655	56
5	.00145	687 549	.01891	52 8821	.03638	27.4899	.05387	18 5645	.07139	14 0079	55
6	.00175	572 957	.01920	52.0807	.03667	27.2715	.05416	18 4645	.07168	13 9507	54
7	.00204	491 106	.01949	51 3032	.03696	27 0566	.05445	18.3655	.07197	13 8940	53
8	.00233	429.718	.01978	50.5485	.03725	26.8450	.05474	18 2677	.07227	13 8378	52
9	.00262	381 971	.02007	49 8157	.03754	26 6367	.05503	18 1708	.07256	13 7821	51
10	.00291	343 774	.02036	49 1039	.03783	26 4316	.05533	18 0750	.07285	13 7267	50
11	.00320	312.521	.02066	48 4121	.03812	26 2296	.05562	17 9802	.07314	13 6719	49
12	.00349	286.478	.02095	47.7395	.03842	26.0307	.05591	17 8863	.07344	13.6174	48
13	.00378	264 441	.02124	47 0853	.03871	25.8348	.05620	17.7934	.07373	13 5634	47
14	.00407	245 552	.02153	46 4489	.03900	25.6418	.05649	17 7015	.07402	13 5098	46
15	.00436	229 181	.02182	45 8294	.03929	25.4517	.05678	17 6106	.07431	13 4566	45
16	.00465	214 858	.02211	45 2261	.03958	25 2644	.05708	17 5205	.07461	13 4039	44
17	.00495	202 219	.02240	44 6386	.03987	25.0798	.05737	17 4314	.07490	13 3515	43
18	.00524	190 984	.02269	44 0661	.04016	24 8978	.05766	17 3432	.07519	13 2996	42
19	.00553	180 932	.02298	43.5081	.04046	24 7185	.05795	17 2558	.07548	13 2480	41
20	.00582	171 885	.02328	42 9641	.04075	24 5418	.05824	17.1693	.07578	13 1969	40
21	.00611	163 700	.02357	42.4335	.04104	24.3675	.05854	17.0837	.07607	13 1461	39
22	.00640	156 259	.02386	41 9158	.04143	24 1957	.05883	16.9990	.07636	13 0958	38
23	.00669	149 465	.02415	41 4106	.04162	24 0263	.05912	16 9150	.07665	13.0458	37
24	.00698	143 237	.02444	40 9174	.04191	23 8593	.05941	16 8319	.07695	12 9962	36
25	.00727	137 507	.02473	40 4358	.04220	23.6945	.05970	16.7496	.07724	12 9469	35
26	.00756	132 219	.02502	39 9655	.04250	23 5321	.05999	16 6681	.07753	12 8981	34
27	.00785	127 321	.02531	39 5059	.04279	23 3718	.06029	16 5874	.07782	12 8496	33
28	.00815	122 774	.02560	39.0568	.04308	23 2137	.06058	16 5075	.07812	12 8014	32
29	.00844	118 540	.02589	38 6177	.04337	23.0577	.06087	16 4283	.07841	12.7536	31
30	.00873	114.589	.02619	38.1885	.04366	22 9038	.06116	16 3499	.07870	12 7062	30
31	.00902	110 892	.02648	37 7686	.04395	22 7519	.06145	16 2722	.07899	12 6591	29
32	.00931	107 426	.02677	37 3579	.04424	22 6020	.06175	16 1952	.07929	12 6124	28
33	.00960	104 171	.02706	36 9560	.04454	22 4541	.06204	16 1190	.07958	12 5660	27
34	.00989	101 107	.02735	36 5627	.04483	22 3081	.06233	16 0435	.07987	12 5199	26
35	.01018	98 217	.02764	36 1776	.04512	22 1640	.06262	15 9687	.08017	12 4742	25
36	.01047	95 489	.02793	35 8006	.04541	22 0217	.06291	15 8945	.08046	12 4288	24
37	.01076	92 908	.02822	35 4313	.04570	21 8813	.06321	15.8211	.08075	12 3838	23
38	.01105	90 462	.02851	35 0695	.04599	21 7426	.06350	15 7483	.08104	12 3390	22
39	.01135	88 143	.02881	34 7151	.04628	21 6056	.06379	15 6762	.08134	12 2946	21
40	.01164	85 940	.02910	34 3678	.04658	21 4704	.06408	15 6048	.08163	12 2505	20
41	.01193	83 845	.02939	34 0273	.04687	21 3369	.06437	15 5340	.08192	12 2067	19
42	.01222	81 847	.02968	33 6935	.04716	21 2049	.06467	15 4638	.08221	12 1632	18
43	.01251	79 942	.02997	33 3662	.04745	21 0747	.06496	15 3943	.08251	12 1201	17
44	.01280	78 126	.03026	33 0452	.04774	20 9460	.06525	15 3254	.08280	12 0772	16
45	.01309	76 393	.03055	32 7303	.04803	20 8188	.06554	15 2571	.08309	12 0346	15
46	.01338	74 737	.03084	32 4213	.04833	20 6932	.06584	15 1893	.08339	11 9923	14
47	.01367	73 156	.03114	32 1181	.04862	20 5691	.06613	15 1222	.08368	11 9504	13
48	.01396	71 636	.03143	31 8205	.04891	20 4465	.06642	15 0557	.08397	11 9087	12
49	.01425	70 185	.03172	31 5284	.04920	20 3253	.06671	14 9898	.08427	11 8673	11
50	.01455	68 793	.03201	31 2416	.04949	20 2056	.06700	14 9244	.08456	11 8262	10
51	.01484	67 459	.03230	30 9599	.04978	20 0872	.06730	14 8596	.08485	11 7853	9
52	.01513	66 176	.03259	30 6833	.05007	19 9702	.06759	14 7954	.08514	11 7448	8
53	.01542	64 941	.03288	30 4116	.05037	19 8546	.06788	14 7317	.08544	11 7045	7
54	.01571	63 752	.03317	30 1447	.05066	19 7403	.06817	14 6685	.08573	11 6645	6
55	.01600	62 604	.03346	29 8823	.05095	19 6273	.06847	14 6059	.08602	11 6248	5
56	.01629	61 497	.03376	29 6245	.05124	19 5156	.06876	14 5438	.08632	11 5853	4
57	.01658	60 428	.03405	29 3711	.05153	19 4051	.06905	14 4823	.08661	11 5461	3
58	.01687	59 396	.03434	29 1220	.05182	19 2959	.06934	14 4212	.08690	11 5072	2
59	.01716	58 398	.03463	28 8773	.05212	19 1879	.06963	14 3607	.08720	11 4685	1
60	.01746	57 435	.03492	28 6367	.05241	19 0811	.06993	14 3007	.08749	11 4301	0
′	Cotang	Tang	Cotang	Tang	Cotang	Tang	Cotang	Tang	Cotang	Tang	′
	89°		88°		87°		86°		85°		

′	5°		6°		7°		8°		9°		′
	Tang	Cotang	Tang	Cotang	Tang	Cotang	Tang	Cotang	Tang	Cotang	
0	.08749	[illegible]	[illegible]	[illegible]	1.2370	[illegible]	14 54	11547	15838	[illegible]	60
1	8778	11	[illegible]	[illegible]	[illegible]	8 12441	14824	[illegible]	15868	[illegible]	59
2	8807	11 54	[illegible]	[illegible]	[illegible]	[illegible]	14853	[illegible]	15898	[illegible]	58
3	8837	11 13	[illegible]	[illegible]	[illegible]	8 05611	14883	7 [illegible]	15928	[illegible]	57
4	8866	11 2701	[illegible]	[illegible]	[illegible]	8 00004	14 5 3	7 [illegible]	15958	[illegible]	56
5	8895	11 2417	[illegible]	[illegible]	[illegible]	[illegible]	14942	7 [illegible]	15988	[illegible]	55
6	8925	11 2148	[illegible]	[illegible]	[illegible]	[illegible]	14972	7 [illegible]	16017	[illegible]	54
7	8954	11 1881	7 06	[illegible]	.12465	8 [illegible]	15002	7 11 74	16047	[illegible]	53
8	8983	11 1617	[illegible]	[illegible]	[illegible]	[illegible]	15031	[illegible]	16077	[illegible]	52
9	[illegible]	11 [illegible]	[illegible]	[illegible]	[illegible]	[illegible]	15061	[illegible]	16107	[illegible]	51
10	.09042	11 [illegible]	.10865	9 [illegible]	.12574	7 [illegible]	15091	[illegible]	.16137	[illegible]	50
11	[illegible]	11 [illegible]	.10894	9 [illegible]	.12603	7 [illegible]	15121	[illegible]	16167	[illegible]	49
12	[illegible]	11 [illegible]	[illegible]	[illegible]	[illegible]	7 [illegible]	15150	[illegible]	16196	[illegible]	48
13	[illegible]	[illegible]	[illegible]	[illegible]	[illegible]	[illegible]	[illegible]	[illegible]	[illegible]	[illegible]	47
14	[illegible]	[illegible]	[illegible]	[illegible]	[illegible]	[illegible]	[illegible]	[illegible]	[illegible]	[illegible]	46
15	[illegible]	[illegible]	[illegible]	[illegible]	[illegible]	[illegible]	[illegible]	[illegible]	[illegible]	[illegible]	45
16	[illegible]	[illegible]	[illegible]	[illegible]	[illegible]	[illegible]	[illegible]	[illegible]	[illegible]	[illegible]	44
17	[illegible]	[illegible]	[illegible]	[illegible]	[illegible]	[illegible]	[illegible]	[illegible]	[illegible]	[illegible]	43
18	[illegible]	[illegible]	[illegible]	[illegible]	[illegible]	[illegible]	[illegible]	[illegible]	[illegible]	[illegible]	42
19	[illegible]	[illegible]	[illegible]	[illegible]	[illegible]	[illegible]	[illegible]	[illegible]	[illegible]	[illegible]	41
20	[illegible]	[illegible]	[illegible]	[illegible]	[illegible]	[illegible]	[illegible]	[illegible]	[illegible]	[illegible]	40
21	[illegible]	[illegible]	[illegible]	[illegible]	[illegible]	[illegible]	[illegible]	[illegible]	[illegible]	[illegible]	39
22	[illegible]	[illegible]	[illegible]	[illegible]	[illegible]	[illegible]	[illegible]	[illegible]	[illegible]	[illegible]	38
23	[illegible]	[illegible]	[illegible]	[illegible]	[illegible]	[illegible]	[illegible]	[illegible]	[illegible]	[illegible]	37
24	[illegible]	[illegible]	[illegible]	[illegible]	[illegible]	[illegible]	[illegible]	[illegible]	[illegible]	[illegible]	36
25	[illegible]	[illegible]	[illegible]	[illegible]	[illegible]	[illegible]	[illegible]	[illegible]	[illegible]	[illegible]	35
26	[illegible]	[illegible]	[illegible]	[illegible]	[illegible]	[illegible]	[illegible]	[illegible]	[illegible]	[illegible]	34
27	[illegible]	[illegible]	[illegible]	[illegible]	[illegible]	[illegible]	[illegible]	[illegible]	[illegible]	[illegible]	33
28	[illegible]	[illegible]	[illegible]	[illegible]	[illegible]	[illegible]	[illegible]	[illegible]	[illegible]	[illegible]	32
29	[illegible]	[illegible]	[illegible]	[illegible]	[illegible]	[illegible]	[illegible]	[illegible]	[illegible]	[illegible]	31
30	09029	10 3854	11004	8 77689	1.3035	7 60575	14945	[illegible]	16774	[illegible]	30
31	[illegible]	10 3538	11423	8 75435	[illegible]	7 57874	14975	[illegible]	[illegible]	[illegible]	29
32	9088	[illegible]	.11452	8 73172	[illegible]	7.55170	[illegible]	[illegible]	[illegible]	[illegible]	28
33	[illegible]	[illegible]	11482	[illegible]	[illegible]	[illegible]	[illegible]	[illegible]	[illegible]	[illegible]	27
34	09746	[illegible]	1511	[illegible]	[illegible]	[illegible]	[illegible]	[illegible]	16854	[illegible]	26
35	[illegible]	[illegible]	[illegible]	[illegible]	[illegible]	[illegible]	[illegible]	[illegible]	[illegible]	[illegible]	25
36	[illegible]	[illegible]	[illegible]	[illegible]	[illegible]	[illegible]	[illegible]	[illegible]	[illegible]	[illegible]	24
37	[illegible]	[illegible]	[illegible]	[illegible]	[illegible]	[illegible]	[illegible]	[illegible]	[illegible]	[illegible]	23
38	[illegible]	[illegible]	[illegible]	[illegible]	[illegible]	[illegible]	[illegible]	[illegible]	[illegible]	[illegible]	22
39	[illegible]	[illegible]	[illegible]	[illegible]	[illegible]	[illegible]	[illegible]	[illegible]	[illegible]	[illegible]	21
40	[illegible]	[illegible]	[illegible]	[illegible]	[illegible]	[illegible]	[illegible]	[illegible]	[illegible]	[illegible]	20
41	[illegible]	[illegible]	[illegible]	[illegible]	[illegible]	[illegible]	15272	[illegible]	.17063	[illegible]	19
42	[illegible]	[illegible]	[illegible]	[illegible]	[illegible]	[illegible]	[illegible]	[illegible]	[illegible]	[illegible]	18
43	[illegible]	[illegible]	[illegible]	[illegible]	[illegible]	[illegible]	[illegible]	[illegible]	[illegible]	[illegible]	17
44	[illegible]	[illegible]	[illegible]	[illegible]	[illegible]	[illegible]	[illegible]	[illegible]	[illegible]	[illegible]	16
45	[illegible]	[illegible]	[illegible]	[illegible]	[illegible]	[illegible]	[illegible]	[illegible]	[illegible]	[illegible]	15
46	[illegible]	[illegible]	[illegible]	[illegible]	[illegible]	[illegible]	[illegible]	[illegible]	[illegible]	[illegible]	14
47	[illegible]	[illegible]	[illegible]	[illegible]	[illegible]	[illegible]	[illegible]	[illegible]	[illegible]	[illegible]	13
48	[illegible]	[illegible]	[illegible]	[illegible]	[illegible]	[illegible]	[illegible]	[illegible]	[illegible]	[illegible]	12
49	[illegible]	[illegible]	[illegible]	[illegible]	[illegible]	[illegible]	[illegible]	[illegible]	[illegible]	[illegible]	11
50	.10216	[illegible]	11383	[illegible]	.13168	[illegible]	15340	[illegible]	17333	[illegible]	10
51	[illegible]	[illegible]	[illegible]	[illegible]	[illegible]	[illegible]	[illegible]	[illegible]	[illegible]	[illegible]	9
52	.10275	[illegible]	[illegible]	[illegible]	[illegible]	[illegible]	[illegible]	[illegible]	[illegible]	[illegible]	8
53	[illegible]	[illegible]	[illegible]	[illegible]	[illegible]	[illegible]	[illegible]	[illegible]	[illegible]	[illegible]	7
54	[illegible]	[illegible]	[illegible]	[illegible]	[illegible]	[illegible]	[illegible]	[illegible]	[illegible]	[illegible]	6
55	[illegible]	[illegible]	[illegible]	[illegible]	[illegible]	[illegible]	[illegible]	[illegible]	[illegible]	[illegible]	5
56	[illegible]	[illegible]	[illegible]	[illegible]	[illegible]	[illegible]	[illegible]	[illegible]	[illegible]	[illegible]	4
57	[illegible]	[illegible]	[illegible]	[illegible]	[illegible]	[illegible]	[illegible]	[illegible]	[illegible]	[illegible]	3
58	[illegible]	[illegible]	[illegible]	[illegible]	[illegible]	[illegible]	[illegible]	[illegible]	[illegible]	[illegible]	2
59	[illegible]	[illegible]	[illegible]	[illegible]	[illegible]	[illegible]	[illegible]	[illegible]	[illegible]	[illegible]	1
60	[illegible]	[illegible]	[illegible]	[illegible]	[illegible]	[illegible]	[illegible]	[illegible]	[illegible]	[illegible]	0
′	Cotang	Tang	Cotang	Tang	Cotang	Tang	Cotang	Tang	Cotang	Tang	′
	84°		83°		82°		81°		80°		

′	10°		11°		12°		13°		14°		′
	Tang	Cotang	Tang	Cotang	Tang	Cotang	Tang	Cotang	Tang	Cotang	
0	.17633	5 67128	.19438	5.14455	21256	4 70463	23087	4 33148	24933	4 01078	60
1	.17663	5.66165	.19468	5.13658	.21286	4 69791	.23117	4 32573	24964	4 00582	59
2	.17693	5.65205	.19498	5.12862	21316	4.69121	23148	4 32001	24995	4 00086	58
3	17723	5.64248	.19529	5 12069	.21347	4 68452	23179	4 31430	25026	3 99591	57
4	.17753	5 63295	.19559	5.11279	21377	4 67786	23240	4 30860	25056	3 99096	56
5	.17783	5.62344	.19589	5.10490	.21408	4 67121	23240	4 30291	25087	3.98603	55
6	.17813	5.61397	.19619	5.09704	21438	4.66458	23271	4 29724	25118	3 98117	54
7	.17843	5 60452	19649	5.08921	.21469	4 65797	.23301	4 29159	25149	3 97627	53
8	17873	5.59511	.19680	5.08139	.21499	4.65138	23332	4 28595	25180	3 97140	52
9	.17903	5 58573	.19710	5.07360	21529	4 64480	23361	4 28032	.25211	3 96651	51
10	.17933	5 57638	.19740	5.06584	.21560	4 63825	.23393	4 27471	.25242	3 96165	50
11	.17963	5.56706	.19770	5.05809	.21590	4 63171	23424	4 26911	.25273	3 95680	49
12	17993	5.55777	.19801	5.05037	21621	4.62518	23455	4 26352	.25304	3 95196	48
13	18023	5 54851	19831	5.04267	21651	4 61868	23485	4 25795	.25335	3 94713	47
14	.18053	5 53927	.19861	5.03499	.21682	4 61219	23516	4 25239	25366	3 94232	46
15	18083	5.53007	19891	5 02734	21712	4 60572	23547	4 24684	.25397	3 93751	45
16	.18113	5.52090	.19921	5 01971	.21743	4 59927	23578	4 24132	25428	3 93271	44
17	.18143	5.51176	19952	5 01210	.21773	4.59283	23608	4 23580	25459	3 9279	43
18	18173	5 50264	19982	5 00451	.21804	4 58641	23639	4 23030	25490	3 92310	42
19	.18203	5.49356	.20012	4.99695	.21834	4.58001	23670	4 22481	25521	3 91839	41
20	.18233	5 48451	20042	4 98940	21864	4.57363	.23700	4 21933	25552	3 91364	40
21	.18263	5.47548	.20073	4 98188	21895	4.56726	23731	4 21387	25583	3 90890	39
22	.18293	5.46648	.20103	4.97438	.21925	4 56091	23762	4 20842	25614	3 90417	38
23	.18323	5.45751	.20133	4 96690	21956	4 55458	23793	4 20298	25645	3 89945	37
24	18353	5.44857	20164	4 95945	.21986	4 54826	23823	4 19756	25676	3 89474	36
25	.18384	5.43966	.20194	4.95201	.22017	4 54196	.23854	4 19215	25707	3 89004	35
26	18414	5.43077	20224	4 94460	22047	4 53568	.23885	4 18675	.25738	3 88536	34
27	18444	5.42192	.20254	4.93721	.22078	4.52941	23916	4 18137	25769	3 88068	33
28	.18474	5.41309	.20285	4 92984	.22108	4 52316	23946	4 17600	25800	3 87601	32
29	.18504	5.40429	.20315	4.92249	.22139	4.51693	23977	4 17064	25831	3 87136	31
30	.18534	5.39552	.20345	4 91516	.22169	4 51071	24008	4 16530	25862	3 86671	30
31	18564	5 38677	20376	4 90785	22200	4 50451	24039	4 15997	25893	3 86208	29
32	18594	5 37805	20406	4 90057	22231	4 49832	24069	4 15464	25924	3 85745	28
33	18624	5 36936	20436	4 89330	22261	4 49215	24100	4 14933	25955	3 85284	27
34	18654	5 36071	20467	4 88605	22292	4 48600	24131	4 14403	25986	3 84824	26
35	18684	5 35209	20497	4 87882	22322	4 47986	24162	4 13874	26017	3 84364	25
36	18714	5 34349	20527	4 87162	22353	4 47374	24193	4 13345	26048	3 83906	24
37	18745	5 33493	20557	4 86444	22383	4 46764	24223	4 12825	26079	3 83449	23
38	18775	5 32638	20588	4 85727	22414	4 46155	24254	4 12297	26110	3 82992	22
39	188 5	5 31788	20618	4 85011	22444	4 45547	24285	4 11778	26141	3.82537	21
40	188 5	5 30938	20648	4 84298	22475	4 44942	24316	4 11250	26172	3 82083	20
41	18865	5 30091	20679	4 83585	22505	4 44338	24347	4 10726	26203	3 81629	19
42	18895	5 29248	20709	4 82874	22536	4 43735	24377	4 10203	26235	3 81177	18
43	18925	5 28405	20739	4 82165	22567	4 43134	24408	4 09681	26266	3 80725	17
44	18955	5 27565	20770	4 81457	22597	4 42534	24439	4 09162	26297	3 80274	16
45	18986	5 26731	20800	4 80751	22628	4 41935	24469	4 08642	26328	3 79825	15
46	19016	5 25896	20830	4 80046	22658	4 41338	24500	4 08124	26359	3 79376	14
47	19046	5 25068	20861	4 79343	22689	4 40742	24531	4 07609	26390	3 78931	13
48	19076	5 24240	20891	4 78642	22719	4 40148	24561	4 07095	26421	3.78485	12
49	19106	5 23413	20921	4 77942	22750	4 39555	24592	4 06582	26452	3 78040	11
50	.19136	5 22587	20952	4 77243	.22781	4 38963	.24624	4.06069	.26483	3 77595	10
51	19166	5 21744	20982	4 76546	22811	4 38371	24654	4 05559	26515	3 77152	9
52	19197	5 20935	21013	4 75850	22842	4 37781	24685	4 05052	26546	3 76709	8
53	19227	5 20127	21043	4 75154	22872	4 37209	.24717	4 04586	26577	3 76268	7
54	19257	5 19321	21073	4 74459	22903	4 36602	24747	4 04081	26608	3 75828	6
55	19287	5 18517	21104	4 73858	22934	4 36040	24778	4 03578	.26639	3 75388	5
56	19317	5 17701	21134	4 73177	22964	4 35451	24808	4 03076	26670	3 74950	4
57	19347	5 16911	21164	4 72497	22995	4 34863	24839	4 02574	26701	3 74512	3
58	19378	5 16113	21195	4 71818	23026	4 34276	24871	4 02074	26733	3 74075	2
59	19408	5 15317	21225	4 71141	23056	4 33691	24902	4 01576	26764	3 73640	1
60	19438	5 14455	21256	4 70463	23087	4 33148	24933	4 01078	26795	3 73205	0
′	Cotang	Tang	Cotang	Tang	Cotang	Tang	Cotang	Tang	Cotang	Tang	′
	79°		78°		77°		76°		75°		

′	15°		16°		17°		18°		19°		′
	Tang	Cotang	Tang	Cotang	Tang	Cotang	Tang	Cotang	Tang	Cotang	
0	.26795	3.73205	.28675	3.48741	.30573	3.27085	.32492	3.07768	.34433	2.90421	60
1	.26820	3.72771	.28706	3.48359	.30605	3.26745	.32524	3.07464	.34465	2.90147	59
2	.26857	3.72338	.28738	3.47977	.30637	3.26406	.32556	3.07160	.34498	2.89871	58
3	.26884	3.71907	.28769	3.47596	.30669	3.26067	.32588	3.06857	.34530	2.89595	57
4	.26920	3.71476	.28801	3.47216	.30700	3.25728	.32621	3.06553	.34563	2.89319	56
5	.26951	3.71046	.28832	3.46837	.30732	3.25391	.32653	3.06250	.34596	2.89045	55
6	.26982	3.70616	.28864	3.46458	.30764	3.25053	.32685	3.05950	.34628	2.88771	54
7	.27014	3.70188	.28895	3.46080	.30796	3.24717	.32717	3.05649	.34661	2.88511	53
8	.27044	3.69761	.28927	3.45703	.30828	3.24383	.32749	3.05349	.34693	2.88240	52
9	.27076	3.69334	.28958	3.45327	.30860	3.24049	.32782	3.05049	.34726	2.87970	51
10	.27107	3.68909	.28990	3.44951	.30891	3.23714	.32814	3.04749	.34758	2.87701	50
11	.27138	3.68485	.29021	3.44577	.30923	3.23381	.32846	3.04450	.34791	2.87430	49
12	.27169	3.68061	.29053	3.44202	.30955	3.23048	.32878	3.04152	.34824	2.87161	48
13	.27201	3.67638	.29084	3.43828	.30987	3.22716	.32911	3.03854	.34856	2.86892	47
14	.27232	3.67217	.29116	3.43455	.31019	3.22384	.32943	3.03556	.34889	2.86624	46
15	.27263	3.66796	.29147	3.43084	.31051	3.22053	.32975	3.03259	.34922	2.86357	45
16	.27294	3.66376	.29179	3.42713	.31083	3.21722	.33007	3.02962	.34954	2.86089	44
17	.27326	3.65957	.29210	3.42343	.31115	3.21392	.33040	3.02667	.34987	2.85822	43
18	.27357	3.65538	.29242	3.41973	.31147	3.21062	.33072	3.02372	.35020	2.85555	42
19	.27388	3.65121	.29274	3.41604	.31178	3.20734	.33104	3.02077	.35052	2.85289	41
20	.27419	3.64705	.29305	3.41235	.31210	3.20406	.33136	3.01783	.35085	2.85024	40
21	.27451	3.64289	.29337	3.40867	.31242	3.20078	.33169	3.01489	.35118	2.84758	39
22	.27482	3.63874	.29368	3.40500	.31274	3.19752	.33201	3.01196	.35150	2.84494	38
23	.27513	3.63461	.29400	3.40133	.31306	3.19425	.33233	3.00903	.35183	2.84229	37
24	.27545	3.63048	.29432	3.39767	.31338	3.19099	.33266	3.00611	.35216	2.83965	36
25	.27576	3.62636	.29463	3.39400	.31370	3.18774	.33298	3.00319	.35248	2.83702	35
26	.27607	3.62224	.29495	3.39035	.31402	3.18448	.33330	3.00028	.35281	2.83439	34
27	.27638	3.61814	.29526	3.38669	.31434	3.18124	.33363	2.99738	.35314	2.83176	33
28	.27670	3.61405	.29558	3.38305	.31466	3.17801	.33395	2.99447	.35346	2.82914	32
29	.27701	3.60996	.29590	3.37941	.31498	3.17477	.33427	2.99158	.35379	2.82653	31
30	.27732	3.60588	.29621	3.37594	.31530	3.17159	.33460	2.98868	.35412	2.82391	30
31	.27764	3.60181	.29653	.37234	.31562	3.16838	.33492	2.98580	.35445	2.82131	29
32	.27795	3.59775	.29685	3.36875	.31594	3.16517	.3352[illegible]	2.98291	.35477	2.81871	28
33	.27826	3.59371	.29716	3.36516	.31626	3.16197	.33557	2.98004	.35510	2.81611	27
34	.27858	3.58966	.29748	3.36158	.31658	3.15877	.33589	2.97717	.35543	2.81352	26
35	.27889	3.58562	.29780	3.35800	.31690	3.15558	.33621	2.97431	.35576	2.81093	25
36	.27921	3.58160	.29811	3.35443	.31722	3.15240	.33654	2.97144	.35608	2.80834	24
37	.27952	3.57757	.29843	3.35087	.31754	3.14922	.33686	2.96858	.35641	2.80574	23
38	.27983	3.57357	.29875	3.34732	.31786	3.14605	.33718	2.96573	.35674	2.80317	22
39	.28015	3.56957	.29906	3.34377	.31818	3.14288	.33751	2.96288	.35707	2.80059	21
40	.28046	3.56557	.29938	3.34023	.31850	3.13972	.33783	2.96004	.35740	2.79802	20
41	.28077	3.56159	.29970	.33667	.31882	3.13656	.33816	2.95721	.35772	2.79545	19
42	.28109	3.55761	.30001	3.33313	.31914	3.13341	.33848	2.95437	.35805	2.79289	18
43	.28140	3.55364	.30033	3.32960	.31946	3.13027	.33881	2.95155	.35838	2.79033	17
44	.28172	3.54968	.30065	.32607	.31978	3.12713	.33913	2.94872	.35871	2.78778	16
45	.28203	3.54573	.30097	.32254	.32010	.12400	.33945	2.94591	.35904	2.78521	15
46	.28234	3.54178	.30128	.31902	.32042	3.12087	.33978	2.94309	.35937	2.78267	14
47	.28266	3.53785	.30160	3.31550	.32074	3.11775	.34010	2.94028	.35969	.78014	13
48	.28297	3.53391	.30192	.31198	.32106	3.11464	.34043	2.93748	.36002	2.77761	12
49	.28329	3.52999	.30224	3.30848	.32139	3.11153	.34075	2.93468	.36035	2.77507	11
50	.28360	3.52608	.30255	3.30521	.32171	3.10842	.34108	2.93189	.36068	2.77254	10
51	.28391	3.52217	.30287	3.30174	.32203	3.10532	.34140	2.92910	.36101	2.77002	9
52	.28423	3.51826	.30319	3.29826	.32235	3.10222	.34173	2.92632	.36134	.76751	8
53	.28454	3.51437	.30351	3.29479	.32267	3.09913	.34205	2.92354	.36167	2.76498	7
54	.28485	3.51048	.30382	3.29133	.32299	.09604	.34238	2.92076	.36199	.76249	6
55	.28517	3.50660	.30414	3.28787	.32331	.09296	.34270	2.91799	.36232	2.75998	5
56	.28549	3.50273	.30446	3.28442	.32363	.08987	.34303	2.91523	.36265	2.75747	4
57	.28581	3.49886	.30478	.28098	.32396	3.08680	.34335	2.91246	.36298	2.75496	3
58	.28612	3.49500	.30509	3.27753	.32428	.08373	.34368	2.90971	.36331	2.75246	2
59	.28643	3.49113	.30541	3.27410	.32460	.08066	.34400	2.90695	.36364	2.74997	1
60	.28675	3.48741	.30573	3.27065	.32492	3.07768	.34433	2.90421	.36397	2.74748	0
′	Cotang	Tang	Cotang	Tang	Cotang	Tang	Cotang	Tang	Cotang	Tang	′
	74°		73°		72°		71°		70°		

′	20°		21°		22°		23°		24°		′
	Tang	Cotang	Tang	Cotang	Tang	Cotang	Tang	Cotang	Tang	Cotang	
0	.36397	2.74748	.38386	2.60509	.40403	2.47509	.42447	2.35585	.44523	2.24604	60
1	.36430	2.74491	.38420	2.60283	.40436	2.47302	.42482	2.35395	.44558	2.24428	59
2	.36463	2.74251	.38453	2.60057	.40470	2.47095	.42516	2.35205	.44593	2.24252	58
3	.36496	2.74004	.38487	2.59831	.40504	2.46888	.42551	2.35015	.44627	2.24077	57
4	.36529	2.73756	.38520	2.59606	.40538	2.46682	.42585	2.34825	.44662	2.23902	56
5	.36562	2.73509	.38553	2.59381	.40572	2.46476	.42619	2.34636	.44697	2.23727	55
6	.36595	2.73264	.38587	2.59156	.40606	2.46272	.42654	2.34447	.44732	2.23551	54
7	.36628	2.73017	.38620	2.58932	.40640	2.46065	.42688	2.34258	.44767	2.23378	53
8	.36661	2.72771	.38654	2.58708	.40674	2.45860	.42722	2.34069	.44802	2.23204	52
9	.36694	2.72526	.38687	2.58484	.40707	2.45655	.42757	2.33881	.44837	2.23030	51
10	.36727	2.72281	.38721	2.58261	.40741	2.45451	.42792	2.33693	.44872	2.22857	50
11	.36760	2.72036	.38754	2.58038	.40775	2.45246	.42826	2.33505	.44907	2.22683	49
12	.36793	2.71792	.38787	2.57815	.40809	2.45043	.42860	2.33317	.44942	2.22510	48
13	.36826	2.71548	.38821	2.57593	.40843	2.44839	.42894	2.33130	.44977	2.22337	47
14	.36859	2.71305	.38854	2.57372	.40877	2.44636	.42929	2.32943	.45012	2.22164	46
15	.36892	2.71062	.38888	2.57150	.40911	2.44433	.42963	2.32756	.45047	2.21992	45
16	.36925	2.70819	.38921	2.56928	.40945	2.44230	.42998	2.32570	.45082	2.21819	44
17	.36958	2.70577	.38955	2.56707	.40979	2.44027	.43032	2.32383	.45117	2.21647	43
18	.36991	2.70335	.38988	2.56487	.41013	2.43825	.43067	2.32197	.45152	2.21475	42
19	.37024	2.70094	.39022	2.56266	.41047	2.43623	.43101	2.32012	.45187	2.21304	41
20	.37057	2.69853	.39055	2.56046	.41081	2.43422	.43136	2.31826	.45222	2.21132	40
21	.37090	2.69612	.39089	2.55827	.41115	2.43220	.43170	2.31641	.45257	2.20961	39
22	.37123	2.69371	.39122	2.55608	.41149	2.43019	.43205	2.31456	.45292	2.20790	38
23	.37157	2.69131	.39156	2.55389	.41183	2.42819	.43239	2.31271	.45327	2.20619	37
24	.37190	2.68892	.39190	2.55170	.41217	2.42618	.43274	2.31086	.45362	2.20449	36
25	.37223	2.68651	.39223	2.54952	.41251	2.42418	.43308	2.30902	.45397	2.20278	35
26	.37256	2.68414	.39257	2.54734	.41285	2.42218	.43343	2.30718	.45432	2.20108	34
27	.37289	2.68175	.39290	2.54516	.41319	2.42019	.43378	2.30534	.45467	2.19938	33
28	.37322	2.67937	.39324	2.54299	.41353	2.41819	.43412	2.30351	.45502	2.19769	32
29	.37355	2.67700	.39357	2.54082	.41387	2.41620	.43447	2.30167	.45538	2.19599	31
30	.37388	2.67462	.39391	2.53865	.41421	2.41421	.43481	2.29984	.45573	2.19432	30
31	.37422	2.67225	.39425	2.53648	.41455	2.41222	.43516	2.29801	.45608	2.19264	29
32	.37455	2.66989	.39458	2.53432	.41490	2.41023	.43550	2.29619	.45643	2.19096	28
33	.37488	2.66752	.39492	2.53217	.41524	2.40825	.43585	2.29437	.45678	2.18929	27
34	.37521	2.66516	.39526	2.53001	.41558	2.40626	.43620	2.29254	.45713	2.18763	26
35	.37554	2.66281	.39559	2.52786	.41592	2.40428	.43654	2.29073	.45748	2.18596	25
36	.37588	2.66046	.39593	2.52571	.41626	2.40230	.43689	2.28891	.45784	2.18431	24
37	.37621	2.65811	.39626	2.52357	.41660	2.40032	.43724	2.28710	.45819	2.18265	23
38	.37654	2.65576	.39660	2.52142	.41694	2.39834	.43758	2.28528	.45854	2.18099	22
39	.37687	2.65342	.39694	2.51929	.41728	2.39636	.43793	2.28348	.45889	2.17934	21
40	.37720	2.65109	.39727	2.51715	.41763	2.39438	.43828	2.28167	.45924	2.17769	20
41	.37754	2.64875	.39761	2.51502	.41797	2.39241	.43862	2.27987	.45960	2.17605	19
42	.37787	2.64642	.39795	2.51289	.41831	2.39043	.43897	2.27806	.45995	2.17440	18
43	.37820	2.64410	.39829	2.51076	.41865	2.38846	.43932	2.27626	.46030	2.17276	17
44	.37853	2.64177	.39862	2.50864	.41899	2.38649	.43966	2.27447	.46065	2.17112	16
45	.37887	2.63945	.39896	2.50652	.41933	2.38452	.44001	2.27267	.46101	2.16948	15
46	.37920	2.63714	.39930	2.50440	.41968	2.38256	.44036	2.27088	.46136	2.16785	14
47	.37953	2.63482	.39963	2.50229	.42002	2.38060	.44071	2.26909	.46171	2.16622	13
48	.37986	2.63251	.39997	2.50018	.42036	2.37864	.44105	2.26730	.46206	2.16459	12
49	.38020	2.63020	.40031	2.49807	.42070	2.37669	.44140	2.26552	.46242	2.16296	11
50	.38053	2.62789	.40065	2.49597	.42105	2.37474	.44175	2.26374	.46277	2.16096	10
51	.38086	2.62559	.40098	2.49386	.42139	2.37279	.44209	2.26197	.46312	2.15925	9
52	.38120	2.62329	.40132	2.49177	.42173	2.37085	.44244	2.26019	.46348	2.15765	8
53	.38153	2.62099	.40166	2.48967	.42208	2.36890	.44279	2.25842	.46383	2.15596	7
54	.38187	2.61870	.40200	2.48758	.42242	2.36696	.44314	2.25666	.46418	2.15432	6
55	.38220	2.61640	.40234	2.48549	.42277	2.36502	.44349	2.25489	.46454	2.15268	5
56	.38253	2.61411	.40267	2.48340	.42311	2.36308	.44384	2.25313	.46489	2.15104	4
57	.38287	2.61182	.40301	2.48132	.42346	2.36114	.44418	2.25137	.46525	2.14940	3
58	.38320	2.60954	.40335	2.47924	.42381	2.35921	.44453	2.24962	.46560	2.14777	2
59	.38354	2.60725	.40369	2.47716	.42415	2.35727	.44488	2.24786	.46595	2.14614	1
60	.38387	2.60497	.40403	2.47509	.42450	2.35534	.44523	2.24610	.46631	2.14451	0
′	Cotang	Tang	Cotang	Tang	Cotang	Tang	Cotang	Tang	Cotang	Tang	′
	69°		68°		67°		66°		65°		

′	25°		26°		27°		28°		29°		′
	Tang	Cotang	Tang	Cotang	Tang	Cotang	Tang	Cotang	Tang	Cotang	
0	.46941	2.14451	.48773	2.05030	.50633	1.97627	.53171	1.88073	.55431	1.80405	60
1	.46966	2.14288	.48800	2.04879	.50662	1.97440	.53208	1.87941	.55469	1.80281	59
2	.46991	2.14125	.48824	2.04728	.50691	1.97253	.53246	1.87811	.55507	1.80158	58
3	.47017	2.13962	.48850	2.04577	.50720	1.97066	.53283	1.87681	.55545	1.80034	57
4	.47042	2.13800	.48876	2.04426	.50749	1.96879	.53320	1.87550	.55583	1.79911	56
5	.47068	2.13637	.48902	2.04276	.50778	1.96693	.53358	1.87420	.55621	1.79788	55
6	.47093	2.13477	.48928	2.04125	.50807	1.96507	.53395	1.87290	.55659	1.79665	54
7	.47118	2.13315	.48954	2.03975	.50836	1.96321	.53432	1.87161	.55697	1.79542	53
8	.47144	2.13154	.48980	2.03825	.50865	1.96135	.53470	1.87031	.55736	1.79419	52
9	.47169	2.12993	.49006	2.03675	.50894	1.95949	.53507	1.86902	.55774	1.79297	51
10	.47195	2.12832	.49032	2.03526	.50923	1.95764	.53545	1.86772	.55812	1.79174	50
11	.47220	2.12671	.49058	2.03376	.50952	1.95578	.53582	1.86643	.55850	1.79051	49
12	.47245	2.12511	.49084	2.03227	.50981	1.95393	.53620	1.86514	.55888	1.78928	48
13	.47271	2.12350	.49110	2.03078	.51011	1.95208	.53657	1.86386	.55926	1.78807	47
14	.47296	2.12190	.49136	2.02929	.51040	1.95023	.53694	1.86257	.55964	1.78685	46
15	.47322	2.12030	.49162	2.02780	.51069	1.94838	.53732	1.86128	.56003	1.78563	45
16	.47347	2.11871	.49188	2.02631	.51099	1.94654	.53769	1.86000	.56041	1.78442	44
17	.47372	2.11711	.49214	2.02483	.51128	1.94470	.53807	1.85872	.56079	1.78321	43
18	.47398	2.11552	.49240	2.02335	.51158	1.94286	.53844	1.85745	.56117	1.78199	42
19	.47423	2.11392	.49266	2.02187	.51187	1.94102	.53882	1.85617	.56156	1.78078	41
20	.47448	2.11233	.49292	2.02039	.51216	1.93919	.53920	1.85490	.56194	1.77958	40
21	.47473	2.11075	.49318	1.91891	.51246	1.93734	.53958	1.85363	.56232	1.77838	39
22	.47499	2.10917	.49344	1.91745	.51276	1.93551	.53995	1.85236	.56270	1.77719	38
23	.47524	2.10758	.49370	1.91598	.51305	1.93367	.54033	1.85109	.56309	1.77599	37
24	.47549	2.10600	.49396	1.91451	.51335	1.93184	.54071	1.84982	.56347	1.77479	36
25	.47575	2.10442	.49422	1.91304	.51364	1.93001	.54109	1.84856	.56385	1.77360	35
26	.47600	2.10284	.49448	1.91157	.51394	1.92818	.54147	1.84729	.56424	1.77241	34
27	.47626	2.10126	.49474	1.91011	.51424	1.92635	.54184	1.84603	.56462	1.77122	33
28	.47651	2.09969	.49501	1.90865	.51454	1.92453	.54222	1.84477	.56501	1.77003	32
29	.47676	2.09811	.49527	1.90718	.51483	1.92271	.54260	1.84352	.56539	1.76885	31
30	.47702	2.09654	.49553	1.90573	.51513	1.92089	.54298	1.84227	.56577	1.76767	30
31	.47727	2.09498	.49579	1.90427	.51542	1.91907	.54336	1.84102	.56616	1.76649	29
32	.47752	2.09341	.49605	1.90282	.51572	1.91725	.54374	1.83977	.56654	1.76531	28
33	.47778	2.09184	.49631	1.90136	.51602	1.91544	.54412	1.83852	.56693	1.76413	27
34	.47803	2.09028	.49657	1.89991	.51632	1.91363	.54450	1.83728	.56731	1.76297	26
35	.47829	2.08872	.49683	1.89846	.51662	1.91183	.54488	1.83603	.56769	1.76179	25
36	.47854	2.08716	.49709	1.89701	.51692	1.91002	.54526	1.83479	.56808	1.76062	24
37	.47879	2.08561	.49736	1.89556	.51722	1.90822	.54564	1.83355	.56846	1.75945	23
38	.47905	2.08405	.49762	1.89411	.51752	1.90642	.54602	1.83231	.56885	1.75828	22
39	.47930	2.08250	.49788	1.89267	.51782	1.90463	.54641	1.83107	.56923	1.75711	21
40	.47956	2.08094	.49814	1.89122	.51812	1.90283	.54679	1.82983	.56962	1.75595	20
41	.47981	2.07939	.49841	1.88978	.51842	1.90104	.54717	1.82859	.57000	1.75478	19
42	.48007	2.07785	.49867	1.88833	.51872	1.89924	.54756	1.82735	.57039	1.75362	18
43	.48032	2.07630	.49893	1.88689	.51902	1.89745	.54794	1.82612	.57078	1.75246	17
44	.48058	2.07476	.49919	1.88545	.51932	1.89566	.54833	1.82488	.57116	1.75130	16
45	.48083	2.07321	.49945	1.88401	.51962	1.89387	.54871	1.82365	.57155	1.75015	15
46	.48109	2.07167	.49972	1.88257	.51992	1.89208	.54910	1.82242	.57193	1.74899	14
47	.48134	2.07014	.49998	1.88113	.52022	1.89029	.54948	1.82119	.57232	1.74784	13
48	.48160	2.06860	.50024	1.87969	.52052	1.88850	.54987	1.81996	.57271	1.74669	12
49	.48185	2.06706	.50050	1.87825	.52082	1.88671	.55026	1.81873	.57309	1.74554	11
50	.48211	2.06553	.50076	1.87681	.52112	1.88493	.55064	1.81751	.57348	1.74439	10
51	.48236	2.06400	.50103	1.87538	.52142	1.88314	.55103	1.81628	.57386	1.74325	9
52	.48262	2.06247	.50129	1.87395	.52172	1.88136	.55141	1.81506	.57425	1.74210	8
53	.48287	2.06094	.50155	1.87252	.52202	1.87958	.55180	1.81384	.57464	1.74096	7
54	.48313	2.05942	.50181	1.87109	.52232	1.87780	.55219	1.81262	.57503	1.73982	6
55	.48338	2.05790	.50207	1.86966	.52262	1.87602	.55257	1.81140	.57541	1.73868	5
56	.48364	2.05637	.50233	1.86823	.52292	1.87425	.55296	1.81018	.57580	1.73754	4
57	.48389	2.05485	.50259	1.86681	.52322	1.87247	.55335	1.80897	.57619	1.73641	3
58	.48415	2.05333	.50286	1.86538	.52352	1.87070	.55374	1.80776	.57657	1.73527	2
59	.48440	2.05182	.50312	1.86396	.52382	1.86893	.55412	1.80654	.57696	1.73414	1
60	.48466	2.05030	.50338	1.86254	.52412	1.86716	.55451	1.80533	.57735	1.73301	0
′	Cotang	Tang	Cotang	Tang	Cotang	Tang	Cotang	Tang	Cotang	Tang	′
	64°		63°		62°		61°		60°		

′	30°		31°		32°		33°		34°		′
	Tang	Cotang	Tang	Cotang	Tang	Cotang	Tang	Cotang	Tang	Cotang	
0	.57735	1.73205	.60086	1.66428	.62487	1.60033	.64941	1.53986	.67451	1.48256	60
1	.57774	1.73089	.60126	1.66318	.62527	1.59930	.64982	1.53888	.67493	1.48163	59
2	.57813	1.72973	.60165	1.66209	.62568	1.59826	.65024	1.53791	.67536	1.48070	58
3	.57851	1.72857	.60205	1.66099	.62608	1.59723	.65065	1.53693	.67578	1.47977	57
4	.57890	1.72741	.60245	1.65990	.62649	1.59620	.65106	1.53595	.67620	1.47885	56
5	.57929	1.72625	.60284	1.65881	.62689	1.59517	.65148	1.53497	.67663	1.47792	55
6	.57968	1.72509	.60324	1.65772	.62730	1.59414	.65189	1.53400	.67705	1.47699	54
7	.58007	1.72393	.60364	1.65663	.62771	1.59311	.65231	1.53302	.67748	1.47607	53
8	.58046	1.72278	.60403	1.65554	.62811	1.59208	.65272	1.53205	.67790	1.47514	52
9	.58085	1.72163	.60443	1.65445	.62852	1.59105	.65314	1.53107	.67833	1.47422	51
10	.58124	1.72047	.60483	1.65337	.62892	1.59002	.65355	1.53010	.67875	1.47330	50
11	.58162	1.71932	.60522	1.65228	.62933	1.58900	.65397	1.52913	.67917	1.47238	49
12	.58201	1.71817	.60562	1.65120	.62973	1.58797	.65438	1.52816	.67960	1.47146	48
13	.58240	1.71702	.60602	1.65011	.63014	1.58695	.65480	1.52719	.68002	1.47053	47
14	.58279	1.71588	.60642	1.64903	.63055	1.58593	.65521	1.52622	.68045	1.46962	46
15	.58318	1.71473	.60681	1.64795	.63095	1.58490	.65563	1.52525	.68088	1.46870	45
16	.58357	1.71358	.60721	1.64687	.63136	1.58388	.65604	1.52429	.68130	1.46778	44
17	.58396	1.71244	.60761	1.64579	.63177	1.58286	.65646	1.52332	.68173	1.46686	43
18	.58435	1.71130	.60801	1.64471	.63217	1.58184	.65688	1.52235	.68215	1.46595	42
19	.58474	1.71015	.60841	1.64363	.63258	1.58083	.65729	1.52139	.68258	1.46503	41
20	.58513	1.70901	.60881	1.64256	.63299	1.57981	.65771	1.52043	.68301	1.46411	40
21	.58552	1.70787	.60921	1.64148	.63340	1.57879	.65813	1.51946	.68343	1.46320	39
22	.58591	1.70673	.60960	1.64041	.63380	1.57778	.65854	1.51850	.68386	1.46229	38
23	.58631	1.70560	.61000	1.63934	.63421	1.57676	.65896	1.51754	.68429	1.46137	37
24	.58670	1.70446	.61040	1.63827	.63462	1.57575	.65938	1.51658	.68471	1.46046	36
25	.58709	1.70332	.61080	1.63721	.63503	1.57474	.65980	1.51562	.68514	1.45955	35
26	.58748	1.70221	.61120	1.63614	.63544	1.57372	.66021	1.51466	.68557	1.45864	34
27	.58787	1.70106	.61160	1.63508	.63584	1.57271	.66063	1.51370	.68600	1.45773	33
28	.58826	1.69992	.61200	1.63402	.63625	1.57170	.66105	1.51275	.68642	1.45682	32
29	.58865	1.69879	.61240	1.63295	.63666	1.57069	.66147	1.51179	.68685	1.45592	31
30	.58905	1.69766	.61280	1.63189	.63707	1.56969	.66189	1.51084	.68728	1.45501	30
31	.58944	1.69653	.61320	1.63083	.63748	1.56868	.66230	1.50988	.68771	1.45411	29
32	.58983	1.69541	.61360	1.62977	.63789	1.56767	.66272	1.50893	.68814	1.45320	28
33	.59022	1.69428	.61400	1.62871	.63830	1.56667	.66314	1.50797	.68857	1.45230	27
34	.59061	1.69316	.61440	1.62765	.63871	1.56566	.66356	1.50702	.68900	1.45139	26
35	.59101	1.69203	.61480	1.62659	.63912	1.56466	.66398	1.50607	.68942	1.45049	25
36	.59140	1.69091	.61520	1.62554	.63953	1.56366	.66440	1.50511	.68985	1.44958	24
37	.59179	1.68979	.61561	1.62448	.63994	1.56265	.66482	1.50416	.69028	1.44868	23
38	.59218	1.68866	.61601	1.62342	.64035	1.56165	.66524	1.50321	.69071	1.44778	22
39	.59258	1.68754	.61641	1.62236	.64076	1.56065	.66566	1.50226	.69114	1.44688	21
40	.59297	1.68643	.61681	1.62131	.64117	1.55966	.66608	1.50131	.69157	1.44598	20
41	.59336	1.68531	.61721	1.62025	.64158	1.55866	.66650	1.50035	.69200	1.44508	19
42	.59376	1.68419	.61761	1.61919	.64199	1.55766	.66692	1.49941	.69243	1.44418	18
43	.59415	1.68308	.61801	1.61814	.64240	1.55666	.66734	1.49846	.69286	1.44329	17
44	.59454	1.68196	.61842	1.61708	.64281	1.55567	.66776	1.49751	.69329	1.44239	16
45	.59494	1.68085	.61882	1.61602	.64322	1.55467	.66818	1.49656	.69372	1.44149	15
46	.59533	1.67974	.61922	1.61497	.64363	1.55368	.66860	1.49561	.69416	1.44060	14
47	.59573	1.67863	.61962	1.61392	.64404	1.55269	.66902	1.49466	.69459	1.43970	13
48	.59612	1.67752	.62003	1.61286	.64446	1.55170	.66944	1.49372	.69502	1.43881	12
49	.59651	1.67641	.62043	1.61181	.64487	1.55071	.66986	1.49277	.69545	1.43792	11
50	.59691	1.67530	.62083	1.61076	.64528	1.54972	.67028	1.49182	.69588	1.43703	10
51	.59730	1.67419	.62124	1.60971	.64569	1.54873	.67071	1.49088	.69631	1.43614	9
52	.59770	1.67309	.62164	1.60865	.64610	1.54774	.67113	1.48993	.69675	1.43525	8
53	.59809	1.67198	.62204	1.60760	.64652	1.54675	.67155	1.48899	.69718	1.43436	7
54	.59849	1.67088	.62245	1.60655	.64693	1.54576	.67197	1.48805	.69761	1.43347	6
55	.59888	1.66978	.62285	1.60551	.64734	1.54477	.67239	1.48710	.69804	1.43259	5
56	.59928	1.66867	.62325	1.60446	.64775	1.54378	.67282	1.48616	.69847	1.43170	4
57	.59967	1.66757	.62366	1.60341	.64817	1.54281	.67324	1.48522	.69891	1.43082	3
58	.60007	1.66647	.62406	1.60237	.64858	1.54183	.67366	1.48428	.69934	1.42994	2
59	.60046	1.66538	.62446	1.60132	.64899	1.54085	.67409	1.48334	.69977	1.42906	1
60	.60086	1.66428	.62487	1.60028	.64941	1.53986	.67451	1.48240	.70021	1.42818	0
′	Cotang	Tang	Cotang	Tang	Cotang	Tang	Cotang	Tang	Cotang	Tang	′
	59°		58°		57°		56°		55°		

′	35°		36°		37°		38°		39°		′
	Tang	Cotang	Tang	Cotang	Tang	Cotang	Tang	Cotang	Tang	Cotang	
0	.70021	1.42815	.72654	1.37638	.75355	1.32704	.78129	1.27994	.81078	1.23490	60
1	.70064	1.42726	.72699	1.37554	.75401	1.32624	.78175	1.27917	.81027	1.23416	59
2	.70107	1.42638	.72743	1.37470	.75447	1.32544	.78222	1.27841	.81075	1.23343	58
3	.70151	1.42550	.72788	1.37386	.75492	1.32464	.78269	1.27764	.81123	1.2327	57
4	.70194	1.42462	.72832	1.37302	.75538	1.32384	.78316	1.27688	.81171	1.23196	56
5	.70238	1.42374	.72877	1.37218	.75584	1.32304	.78363	1.27611	.81220	1.23123	55
6	.70281	1.42286	.72921	1.37134	.75629	1.32224	.78410	1.27535	.81268	1.23050	54
7	.70325	1.42198	.72966	1.37050	.75675	1.32144	.78457	1.27458	.81316	1.22977	53
8	.70368	1.42110	.73010	1.36967	.75721	1.32064	.78504	1.27382	.81364	1.22904	52
9	.70412	1.42022	.73055	1.36883	.75767	1.31984	.78551	1.27306	.81413	1.22831	51
10	.70455	1.41934	.73100	1.36800	.75812	1.31904	.78598	1.27230	.81461	1.22758	50
11	.70499	1.41847	.73144	1.36716	.75858	1.31825	.78645	1.27153	.81510	1.22685	49
12	.70542	1.41759	.73189	1.36633	.75904	1.31745	.78692	1.27077	.81558	1.22612	48
13	.70586	1.41672	.73234	1.36549	.75950	1.31666	.78739	1.27001	.81606	1.22539	47
14	.70629	1.41584	.73278	1.36466	.75996	1.31586	.78786	1.26925	.81655	1.22467	46
15	.70673	1.41497	.73323	1.36383	.76042	1.31507	.78834	1.26849	.81703	1.22394	45
16	.70717	1.41409	.73368	1.36300	.76088	1.31427	.78881	1.26774	.81752	1.22321	44
17	.70760	1.41322	.73413	1.36217	.76134	1.31348	.78928	1.26698	.81800	1.22249	43
18	.70804	1.41235	.73457	1.36134	.76180	1.31269	.78975	1.26622	.81849	1.22176	42
19	.70848	1.41148	.73502	1.36051	.76226	1.31190	.79022	1.26546	.81898	1.22104	41
20	.70891	1.41061	.73547	1.35968	.76272	1.31110	.79070	1.26471	.81946	1.22031	40
21	.70935	1.40974	.73592	1.35885	.76318	1.31031	.79117	1.26395	.81995	1.21959	39
22	.70979	1.40887	.73637	1.35802	.76364	1.30952	.79164	1.26319	.82044	1.21886	38
23	.71023	1.40800	.73681	1.35719	.76410	1.30873	.79212	1.26244	.82092	1.21814	37
24	.71066	1.40714	.73726	1.35637	.76456	1.30795	.79259	1.26169	.82141	1.21742	36
25	.71110	1.40627	.73771	1.35554	.76502	1.30716	.79306	1.26093	.82190	1.21670	35
26	.71154	1.40540	.73816	1.35472	.76548	1.30637	.79354	1.26018	.82238	1.21598	34
27	.71198	1.40454	.73861	1.35389	.76594	1.30558	.79401	1.25943	.82287	1.21526	33
28	.71242	1.40367	.73906	1.35307	.76640	1.30480	.79449	1.25867	.82336	1.21454	32
29	.71285	1.40281	.73951	1.35224	.76686	1.30401	.79496	1.25792	.82385	1.21382	31
30	.71329	1.40195	.73996	1.35142	.76733	1.30323	.79544	1.25717	.82434	1.21310	30
31	.71373	1.40109	.74041	1.35060	.76779	1.30244	.79591	1.25642	.82483	1.21238	29
32	.71417	1.40022	.74086	1.34978	.76825	1.30166	.79639	1.25567	.82531	1.21166	28
33	.71461	1.39936	.74131	1.34897	.76871	1.30087	.79686	1.25492	.82580	1.21094	27
34	.71505	1.39850	.74176	1.34814	.76918	1.30009	.79734	1.25417	.82629	1.2102	26
35	.71549	1.39764	.74221	1.34732	.76964	1.29931	.79781	1.25343	.82678	1.20951	25
36	.71593	1.39679	.74267	1.34650	.77010	1.29853	.79829	1.25268	.82727	1.20879	24
37	.71637	1.39593	.74312	1.34568	.77057	1.29775	.79877	1.25193	.82776	1.20808	23
38	.71681	1.39507	.74357	1.34487	.77103	1.29696	.79924	1.25118	.82825	1.20736	22
39	.71725	1.39421	.74402	1.34405	.77149	1.29618	.79972	1.25044	.82874	1.20665	21
40	.71769	1.39336	.74447	1.34323	.77196	1.29541	.80020	1.24969	.82923	1.20593	20
41	.71813	1.39250	.74492	1.34242	.77242	1.29463	.80067	1.24895	.82972	1.20522	19
42	.71857	1.39165	.74538	1.34160	.77289	1.29385	.80115	1.24820	.83022	1.20451	18
43	.71901	1.39079	.74583	1.34079	.77335	1.29307	.80163	1.24746	.83071	1.20379	17
44	.71946	1.38994	.74628	1.33998	.77382	1.29229	.80211	1.24672	.83120	1.20308	16
45	.71990	1.38909	.74674	1.33916	.77428	1.29152	.80258	1.24597	.83169	1.20237	15
46	.72034	1.38824	.74719	1.33835	.77475	1.29074	.80306	1.24523	.83218	1.20166	14
47	.72078	1.38738	.74764	1.33754	.77521	1.28997	.80354	1.24449	.83268	1.20095	13
48	.72122	1.38653	.74810	1.33673	.77568	1.28919	.80402	1.24375	.83317	1.20024	12
49	.72167	1.38568	.74855	1.33592	.77615	1.28842	.80450	1.24301	.83366	1.19953	11
50	.72211	1.38484	.74900	1.33511	.77661	1.28764	.80498	1.24227	.83415	1.19882	10
51	.72255	1.38399	.74946	1.33430	.77708	1.28687	.80546	1.24153	.83465	1.19811	9
52	.72299	1.38314	.74991	1.33349	.77754	1.28610	.80594	1.24079	.83514	1.19740	8
53	.72344	1.38229	.75037	1.33268	.77801	1.28533	.80642	1.24005	.83564	1.19669	7
54	.72388	1.38145	.75082	1.33187	.77848	1.28456	.80690	1.23931	.83613	1.19599	6
55	.72432	1.38060	.75128	1.33107	.77895	1.28379	.80738	1.23858	.83662	1.19528	5
56	.72477	1.37976	.75173	1.33026	.77941	1.28302	.80786	1.23784	.83712	1.19457	4
57	.72521	1.37891	.75219	1.32946	.77988	1.28225	.80834	1.23710	.83761	1.19387	3
58	.72565	1.37807	.75264	1.32865	.78035	1.28148	.80883	1.23637	.83811	1.19316	2
59	.72610	1.37722	.75310	1.32785	.78082	1.28071	.80931	1.23563	.83860	1.19246	1
60	.72654	1.37638	.75355	1.32704	.78129	1.27994	.80978	1.23490	.83910	1.19175	0
′	Cotang	Tang	Cotang	Tang	Cotang	Tang	Cotang	Tang	Cotang	Tang	′
	54°		53°		52°		51°		50°		

′	40°		41°		42°		43°		44°		′
	Tang	Cotang	Tang	Cotang	Tang	Cotang	Tang	Cotang	Tang	Cotang	
0	.83910	1.19175	86929	1.15037	.90040	1.11061	.93252	1.07237	.96569	1.03553	60
1	83960	1.19105	86980	1.14969	.90093	1.10996	93306	1.07174	96625	1.03493	59
2	84009	1.19035	87031	1.14902	.90146	1.10931	93360	1.07112	96681	1.03431	58
3	84059	1.18964	.87082	1.14834	90199	1.10867	93415	1.07049	.96738	1.03372	57
4	84108	1.18894	87133	1.14767	.90251	1.10802	93469	1.06987	96794	1.03312	56
5	84158	1.18824	87184	1.14699	.90304	1.10737	93524	1.06925	96850	1.03252	55
6	84208	1.18754	87236	1.14632	.90357	1.10672	93578	1.06862	96907	1.03192	54
7	84258	1.18684	87287	1.14565	.90410	1.10607	93633	1.06800	96963	1.03132	53
8	84307	1.18614	87338	1.14498	90463	1.10543	93688	1.06738	97020	1.03072	52
9	.84357	1.18544	87389	1.14430	.90516	1.10478	.93742	1.06676	97076	1.03012	51
10	84407	1.18474	87441	1.14363	.90569	1.10414	93797	1.06613	.97133	1.02952	50
11	.84457	1.18404	87492	1.14296	.90621	1.10349	93852	1.06551	97189	1.02892	49
12	.84507	1.18334	.87543	1.14229	.90674	1.10285	.93906	1.06489	97246	1.02832	48
13	.84556	1.18264	87595	1.14162	.90727	1.10221	93961	1.06427	97302	1.02772	47
14	.84606	1.18194	87646	1.14095	.90781	1.10156	94016	1.06365	.97359	1.02713	46
15	.84656	1.18125	87698	1.14028	90834	1.10092	94071	1.06303	97416	1.02653	45
16	.84706	1.18055	87749	1.13961	90887	1.10027	94125	1.06241	97472	1.02593	44
17	.84756	1.17986	87801	1.13894	.90940	1.09963	94180	1.06179	97529	1.02533	43
18	.84806	1.17916	87852	1.13828	.90993	1.09899	.94235	1.06117	97586	1.02474	42
19	.84856	1.17846	87904	1.13761	.91046	1.09834	.94290	1.06056	97643	1.02414	41
20	.84906	1.17777	87955	1.13694	.91099	1.09770	.94345	1.05994	97700	1.02355	40
21	.84956	1.17708	88007	1.13627	91153	1.09706	.94400	1.05932	97756	1.02295	39
22	.85006	1.17638	88059	1.13561	91206	1.09642	94455	1.05870	97813	1.02236	38
23	.85057	1.17569	88110	1.13494	91259	1.09578	94510	1.05809	97870	1.02176	37
24	.85107	1.17500	88162	1.13428	91313	1.09514	94565	1.05747	97927	1.02117	36
25	.85157	1.17430	88214	1.13361	91366	1.09450	94620	1.05685	97984	1.02057	35
26	.85207	1.17361	88265	1.13295	91419	1.09386	94676	1.05624	98041	1.01998	34
27	85257	1.17292	88317	1.13228	91473	1.09322	94731	1.05562	98098	1.01939	33
28	.85308	1.17223	88369	1.13162	91526	1.09258	94786	1.05501	98155	1.01879	32
29	85358	1.17154	88421	1.13096	91580	1.09195	94841	1.05439	98213	1.01820	31
30	.85408	1.17085	88473	1.13029	91633	1.09131	94896	1.05378	.98270	1.01761	30
31	8 458	1 17 17	8 524	1 12 963	91687	1 09067	94 952	1 5317	98327	1 17 2	29
32	8 509	1 16 47	8 576	1 12 897	91740	1 09003	95 007	1 5255	9 384	1 64	28
33	8 559	1 16 78	8 628	12 830	91794	1 08940	95 062	1 5194	98441	1 5 8	27
34	8 609	1 16 08	8 680	12 764	91847	1 08876	95 118	1 5132	98498	35 4	26
35	8 660	1 15 39	8 732	12 698	91901	1 08812	95 173	1 5071	98556	1 4 7	25
36	8 710	1 15 70	8 784	12 632	91955	1 08749	95 229	1 5010	98613	1 4 11	24
37	8 761	1 15 01	8 836	12 566	92008	1 08685	95 284	1 4948	98671	1 4 15	23
38	8 811	1 14 32	8 888	12 500	92062	1 08622	95 340	1 4887	98728	1 4 20	22
39	8 862	1 14 63	8 940	12 434	92116	1 08559	95 395	1 4827	98786	1 4 24	21
40	8 912	1 13 94	8 992	12 368	92170	1 08496	95 451	1 4766	98843	1 4 29	20
41	8 963	1 13 25	9 045	12 302	92224	1 08432	95 506	1 4705	98901	1 4 33	19
42	9 014	1 12 56	9 097	12 236	92277	1 08369	95 562	1 4644	98958	1 4 38	18
43	9 064	1 11 87	9 149	12 170	92331	1 08306	95 618	1 4583	99016	1 4 42	17
44	9 115	1 11 18	9 201	12 104	92385	1 08243	95 673	1 4522	99073	1 4 47	16
45	9 166	1 10 49	9 253	12 038	92439	1 08179	95 729	1 4461	99131	1 4 51	15
46	9 217	1 10 80	9 306	11 972	92493	1 08116	95 785	1 4401	99189	1 4 56	14
47	9 268	1 10 11	9 358	11 906	92547	1 08053	95 841	1 4340	99247	1 4 61	13
48	9 319	1 9 42	9 410	11 841	92601	1 07990	95 897	1 4279	99304	1 4 65	12
49	9 370	1 8 73	9 463	11 775	92655	1 07927	95 952	1 4218	99362	1 4 70	11
50	9 421	1 8 04	9 515	11 709	92709	1 07864	96 008	1 4158	99420	1 4 75	10
51	9 473	1 7 35	9 567	11 644	92763	1 07801	96 064	1 4097	99478	1 4 80	9
52	9 524	1 6 66	9 620	11 578	92817	1 07738	96 120	1 4036	99536	1 4 84	8
53	9 575	1 5 97	9 672	11 513	92872	1 07676	96 176	1 3976	99594	1 4 89	7
54	9 627	1 5 28	9 725	11 447	92926	1 07613	96 232	1 3915	99652	1 4 94	6
55	9 678	1 4 59	9 777	11 382	92980	1 07550	96 288	1 3855	99710	1 4 99	5
56	9 730	1 3 90	9 830	11 316	93034	1 07487	96 344	1 3794	99768	1 5 04	4
57	9 781	1 3 21	9 883	11 251	93088	1 07425	96 400	1 3734	99826	1 5 09	3
58	9 833	1 2 52	9 935	11 186	93143	1 07362	96 457	1 3674	99884	1 5 14	2
59	9 885	1 1 83	9 988	11 121	93197	1 07299	96 513	1 3614	99942	1 5 19	1
60	9 936	1 1 14	10 041	11 056	93252	1 07237	96 569	1 3553	1 0000	1 5 24	0
′	Tang	Cotang	Tang	Cotang	Tang	Cotang	Tang	Cotang	Tang	Cotang	′
	49°		48°		47°		46°		45°		

INDEX.

NOTE.—All items in this index refer first to the section (see Preface, Vol. I) and then to the page of the section. Thus, "Addendum 17 7" means that addendum will be found on page 7 of section 17.

A.	Sec.	Page.
Addendum	17	7
" circle	17	7
" line	17	7
Adjustable reamers	10	25
Angle, Complement of, Meaning of	15	50
" of helix	15	33
" plates	8	24
" "	10	45
" " for plain milling-machine work	14	16
Angles, Natural functions of	15	50
Angular cuts in milling	15	8
" milling cutters, Classification of	13	23
Annular cutters, Double-tool	10	17
" " Single-tool	10	16
" " Spring-center	10	17
" milling	13	2
Arbor chuck	15	11
" screw	13	34
" shell mill	13	34
" Use of, between centers	13	35
Arbors, Bushed expanding	15	10
" Expanding, for milling	15	9
" for holding milling cutters	13	31
" " index-head use	15	8
" Methods of removing	13	32
" Milling	13	31
" Precautions to be taken with	13	33
" Removing milling	13	32
" Supporting milling	13	32
Automatic gear-cutting engine	17	56

B.	Sec.	Page.
Back lash	17	7
Base circle for involute teeth	17	17
Bearings, Boring spherical	11	44
" Turning spherical	12	7
Bed, Planer	8	1
Bevel-gear blanks, Laying out	17	34
" calculations	17	31
" cutter, Bilgram	17	74
Bevel gears	17	29
" " Construction of pitch circle for	17	36
" " Convergence of teeth in	17	31
" " Cutting angles of	17	35
" " Cutting, with formed cutters	17	58
" " Diameter of	17	30
" " Edge angles of	17	35
" " Face angles of	17	35
" " Laying off angles for	17	33
" " Laying out	17	32
" " Laying out tooth curves for	17	35
" " Molding milling	17	80
" " Octoidal teeth for	17	73
" " Outside diameters of blanks	17	35
" " Pitch circle for	17	30
" " Selecting cutters for	17	58
" " Setting the machine for cutting	17	59
Bevels, Cutting, on a planer	8	40
Bilgram bevel-gear cutter	17	74
Blocks, V, for planer	8	23

	Sec.	Page.
Bolts and clamps, Methods of applying	8	14
" for planers, Shapes of	8	16
Boring and turning operations	11	27
" bar, Cutter slot and keys for	11	30
" " Facing head for	11	33
" " Length of	11	32
" " Location of cutters in	11	31
" " Rotation and support of	11	33
" " Special	11	44
" " support	11	34
" " Vertical	11	44
" " with traveling head	11	32
" bars, Simple	11	30
" Continuous travel on finishing cut	11	41
" cutters, Nut support for	11	32
" cylinders	11	40
" " Machines used in	11	41
" " Tools for finishing cut in	11	41
" devices, Portable	11	45
" Example of setting work	11	28
" fixtures for duplex-pump cylinders	12	15
" fixtures, Special	12	16
" head	11	32
" in a milling machine	16	36
" jigs and fixtures	12	11
" machine, Arrangement of boring bar and cutter	11	39
" machine, Arrangement of feed of	11	25
" " Control of cutting tools on	11	24
" " Control of feed on	11	25
" " Horizontal	11	29
" " table	11	26
" " Vertical, for cylinders	11	43
" machines	11	23
" " Vertical	11	23
" mill, Extension	11	26
" mills, Milling operations in	11	40
" spherical bearings	11	44
Braces or jacks for high planer work	8	30
Bracing a milling cutter	16	22

C.	Sec.	Page.
C clamps	10	46
Caliper, Gear tooth	17	61
Cam classification	16	5
" cutting attachment	16	6
" Face	16	5
" Grooved	16	5
" " face	16	6
" " side	16	6
" Side	16	5
Center countersinks	10	30
" drilling	10	6
" drills	10	34
" mark, Enlarging the	12	1
" rest milling machine	13	8
Centers, Lining of, for taper work in milling	14	46
" Milling, Work done between	14	37
" Planer	8	23
Change gears, Calculating, for milling	15	39
" " for automatic gear-cutter	17	58
Chilled iron dies, Planing	7	23
" Planing	7	20
" Working	7	1
Chilled rolls, Corrugating	7	20
" " Corrugating machine for	7	21
" " Cutting off ends of	7	8
" " Cutting off tools for	7	6
" " Grinding	7	17
" " Grinding turning tools for	7	5
" " Grooving	7	22
" " " tool for	7	13
" " Testing	7	20
" " Turning	7	1
Chuck, Heavy drill	10	40
" Light drill	10	39
" milling arbor	15	11
" Planer	8	7
" Special jaws for planer	8	13
" Split vise	14	33
" work, Examples of milling	15	2
Chucks and face plates for milling	13	37
" Automatic reverse tapping	10	42
Circle, Addendum	17	7
" Describing, in cycloidal system	17	24
" Pitch	17	4
" " for bevel gears	17	30

	Sec.	Page.
Circle, Root	17	7
Circular milling attachment	16	1
" pitch	17	5
" rack	17	72
Clamping rigidly, Necessity of	10	47
" round planer work	8	21
" Spring of work in	8	27
" work by gluing	8	26
" " for grooving	14	23
" " on planer, Spring of	9	6
Clamps and bolts, Methods of applying	8	14
" Bent planer	8	16
" Finger	8	18
" U, for planer work	8	17
Clearance in gearing	17	7
Clough duplex gear-cutter	17	54
Collets, Chuck	13	37
" or drill sockets	10	37
" Plain	13	36
Column shaper	9	13
Complement of an angle, Meaning of	15	50
Compound indexing	15	27
Compound indexing, Rule for calculating moves in	15	27
Cones, Rolling, for bevel gears	17	29
Conjugate-tooth method of gear-cutting	17	47
Conjugate-tooth method of gear-cutting	17	66
Corliss engine cylinder-boring machine	11	41
Corrugating chilled rolls	7	20
" machine for chilled rolls	7	21
Cosine, Meaning of	15	50
Cotangent, Meaning of	15	51
Cotter mill	13	26
Counterbore, Double-end cutter type	10	30
" for light work	10	31
" Ordinary types of	10	30
" Single-end cutter type	10	31
" Special	10	32
" with changeable tool	10	31
Counterboring	10	5
"	10	30
Countersink and reamer combined	10	30
" Definition of	10	28
" Drill as a	10	28
Countersink pin	10	28
Countersinking	10	5
" and counterboring	12	7
Countersinks for centers	10	30
Crank shaper	9	14
Crown gear	17	72
Cut, Depth of, in gear-cutting	17	58
" Rule for depth of, in gear-cutting	17	52
" Starting the, when milling	16	21
" Taking the, in a milling machine	16	10
Cutter bars for slotting machines	9	38
" Bilgram bevel-gear	17	74
" Clough duplex-gear	17	54
" Face-milling	13	11
" Formed process of gear-cutting	17	46
" for worm-wheels, Formed	17	80
" Gang gear, Gould & Eberhardt	17	55
" Gear-tooth	13	28
" Internally lubricated	14	5
" Parts of milling	13	12
" Screw slotter	13	11
" Selection of milling	14	6
" Setting a milling, central	16	30
" Setting a milling, sidewise	16	30
" Setting the, in milling	16	26
Cutters, Annular	10	16
" Built-up face milling	13	15
" Classification of milling	13	10
" Conditions governing choice of	14	6
" Effect of dullness on	13	30
" End mill	13	25
" Face milling	13	11
" Fly milling	13	27
" for bevel gears, Selecting	17	58
" Formed	13	27
" " gang	13	29
" Gang, for gear-cutting	17	53
" having nicked teeth	13	14
" " straight and helical edges	13	12
" Holding milling	13	31
" Keeping, sharp	13	30
" Reversible milling	13	12

	Sec.	Page.
Cutters, Slotting	13	22
" Standard, for gear-cutting	17	49
" Table of offsets for double-angle milling	15	49
" Threaded	13	19
Cutting angles of bevel gears	17	35
" bevel gears, Setting machine for	17	59
" " gears with formed cutters	17	58
" gears, Templet planing process of	17	64
" helical grooves with inclined sides	15	46
" " grooves with one side radial	15	47
" " grooves with parallel sides	15	46
" helixes and spirals	15	45
" off tools for chilled rolls	7	6
" racks	17	62
" speeds and feeds for milling	13	40
" speeds and feeds for milling, Table of	13	49
" speeds for turning rolls	7	8
" " of drills, Table of	12	33
Cycloid, Definition of	17	24
Cycloidal odontograph, Examples in use of	17	28
" odontograph, Grant's	17	25
" system of gearing	17	16
" " " " "	17	24
" teeth, Laying out	17	24
Cylinder boring	11	40
" " machine, Corliss engine	11	41
" " machine, Vertical	11	43

D.	Sec.	Page.
Dedendum	17	7
Depth gauge for gear-teeth	17	53
Diameter of bevel gears	17	30
" " gear, Rule for finding	17	16
" outside of a gear, Rule for finding	17	10
" Pitch, Rule for finding	17	10
Diametral pitch	17	5
" " Rule for finding	17	11
Dividers, Setting of	17	28
Double-angle cutters, Milling	13	24
Draw cut in a shaper, Advantages of	9	26
Drill chuck, Heavy	10	40
" " Light	10	39
" Development of, from the lathe	10	2
" Double scraping edge	10	8
" Driving gear for radial	11	8
" Early form of	10	7
" feed	11	5
" " for radial	11	8
" grinding	13	8
" " Hand	13	8
" Grooved point	10	11
" Heavy type of	11	5
" holes, Causes of irregularity in	10	5
" Medium-class	11	2
" Multiple-spindle	11	13
" point, Form of	10	9
" " Proper form of	13	8
" post	11	35
" Prehistoric	10	1
" Radial, Universal	11	11
" shank	10	13
" shanks, Straight	10	17
" " Tapered	10	18
" Simple radial	11	7
" Single cutting edge	10	8
" socket, Key-grip	10	39
" " Pin-grip	10	37
" sockets for taper shank drills	10	36
" " Morse taper	10	37
" " or collets	10	37
" " Straight	10	35
" Starting the	12	2
" table, Adjustment and clamping	11	5
" Trepanning	12	24
Drills, Advantages of some forms of	10	15
" " of thin point	10	11
" Application of lubricants to	10	19
" Center	10	34
" Classes of	10	6
" Commercial twist	10	13
" Common characteristics of	10	6

	Sec.	Page.
Drills, Cutting speeds of, Tables of	12	33
" Electric	11	19
" Flat	10	9
" Flexible shaft	11	20
" for pipe taps, Table of	12	35
" Lipped	10	12
" Lubricating	12	7
" Lubrication of	10	18
" Machine-shop	10	9
" Parallel side	10	11
" Pneumatic	11	18
" Portable	11	17
" Precautions in grinding twist	10	14
" Provision for supplying lubricants to	10	19
" Results of improperly formed	10	9
" Sensitive	11	16
" Slot and teat	10	15
" Speeds and feeds of, Table of	12	32
" Straight fluted	10	14
" Symmetrical cutting end of	10	10
" Tap, Table of	12	34
" Teat	10	16
" Twist	10	13
" Twisted flat	10	15
Drilling, Adjusting work on table for	12	2
" Advantages of power feed in	12	3
" and boring	10	1
" " "	11	30
" and boring, Double-head machine for	11	39
" and boring, Jigs and fixtures for	12	11
" and boring locomotive connecting-rods	12	17
" and boring machine, Horizontal	11	34
" and boring machines, Horizontal	11	29
" and boring, Setting and fastening work for	11	39
" and tapping devices, Safety	10	41
" deep holes	12	4
" duplicate pieces	12	11
" in a milling machine	16	35
" jigs and fixtures	10	47
Drilling jigs, Construction of	12	12
Drilling jigs, for flanges with irregularly spaced holes	12	13
Drilling jigs for flanges with regularly spaced holes	12	12
Drilling machine, Adjustable table of	11	1
" machines, Arrangement of parts of	10	3
" machine, Driving gear for	11	2
" machines, Essential parts of	10	2
" machine feed	11	4
" " Horizontal flange for	11	16
" " Movable spindle for	11	2
" " operations	12	1
" " Plain clamps for	10	43
" " Principal functions of	10	4
" " Purpose of	10	4
" " Securing work on table of	10	42
" " Simple	11	1
" " table	11	5
" " U clamps for	10	44
" " Variable feed for	11	2
" " Variable speed in	11	1
" operations, Laying out for	12	1
" parts together	10	47
" tools, Forms and uses of	10	6
" Universal table for	11	11
" Use of lead holes in	12	3
" with jig, Example of	12	14
Driving gear for drilling machine	11	2
" milling cutters	13	33
Duplication system of gear-cutting	17	45
" " of gear-cutting	17	49

E.	Sec.	Page.
Electric drills	11	19
Electrically driven flexible shaft	11	20
End mill, Undercutting of	16	20

	Sec.	Page.
End mills, Slotting with	16	16
" milling cutters	18	25
Engine, Gear-cutting	17	56
Epicycloid, Definition of	17	24
Expanding arbors, Bushed	15	10
" " for milling	15	9
Expansion reamer	10	26
Extension boring mill	11	26

F.	Sec.	Page.
Face angles of bevel gears	17	35
" cams	16	5
" cutter, Undercutting of	16	19
" (or plain) milling	13	1
" plate, Holding work on, while milling	15	12
" " work, Example of milling	15	13
" plates for milling	13	37
Facing, Definition of	10	6
" head for boring bar	11	33
Feed, Adjusting the automatic, in milling	16	35
" Adjustment of, in milling	16	24
" Advantages of power, in drilling	12	3
" Direction of, in milling	16	10
" for drill	11	5
" " drilling machine	11	4
" " radial drill	11	8
" " roll turning	7	8
" motion for planer	8	33
" tables, Construction of milling	16	25
Feeds and speeds of drills, Table of	12	32
" Variable, for drills	11	2
Feeding into corners when milling	16	19
" with the cutter, Example of	16	13
Fellows' gear-shaper	17	67
Finger clamps	8	18
Fixtures for turning spherical surfaces	12	27
Flange-drilling machine, Multiple-spindle vertical	11	15
Flat drills	10	9
Flexible shaft	11	20
" " Electrically driven	11	20
Fly cutters	13	27
Form milling	13	2
Formed cutter for worm-wheels	17	80
Formed cutter process of gear-cutting	17	49
" cutters for bevel gears	17	58
Functions, Natural, of angles	15	50

G.	Sec.	Page.
Gang cutters for gear-cutting	17	53
" gear-cutter, Gould & Eberhardt	17	55
" mills, Arranging	16	34
Gashing worm-wheels	17	81
Gauge, Gear-tooth depth	17	53
Gauges, Special, for setting planer tools	9	10
Gear, Bevel, calculations	17	31
" Compound, for cutting spirals	15	41
" Crown	17	72
" cutter, Bilgram bevel	17	74
" " Clough duplex	17	54
" " Gang, Gould & Eberhardt	17	55
" " Swasey	17	77
" cutting	17	1
" " attachments	17	56
" " Conjugate-tooth method of	17	47
" " Conjugate-tooth method of	17	66
" " Duplication system of	17	45
" " Duplication system of	17	49
" " engine	17	56
" " engine, Automatic, Change gears for	17	78
" " engine, Stop shaft for	17	78
" " Formed-cutter process of	17	46
" " Formed-cutter process of	17	49
" " Gang cutters for	17	53
" " Generation system of	17	45
" " Generation system of	17	66
" " Hobbing process of	17	49
" " machinery and attachments	17	55
" " Molding-milling process of	17	48
" " Molding-milling process of	17	76

	Sec.	Page.
Gear-cutting, Molding-planing process of	17	47
" " Molding-planing process of	17	66
" " Molding process of	17	66
" " on the slotter	9	41
" " Rule for depth of cut in	17	52
" " Rule for setting cutters in	17	52
" " Single-tooth molding-planing process of	17	70
" " Standard cutters for	17	49
" " System and processes of	17	45
" " Templet-planing process of	17	47
" " Templet-planing process of	17	64
" Rule for finding circular pitch of	17	13
" Rule for finding diameter of	17	16
" Rule for finding diametral pitch of	17	11
" Rule for finding number of teeth in	17	11
" Rule for finding outside diameter of	17	10
" Rule for finding pitch diameter of	17	12
" shaper, Fellows'	17	67
" Spur, Rules for, calculations	17	9
" teeth, Importance of forms of	17	3
" " Laying out	17	16
" " Proportions of	17	7
Gear-tooth caliper	17	61
" cutter	13	28
" depth gauge	17	53
Gears, Bevel	17	29
" " Construction of pitch circle for	17	36
" " Cutting angles of	17	35
" " Edge angles of	17	35
" " Face angles of	17	35
" " Laying out tooth curves for	17	35
" " Outside diameters of, blanks	17	35
" Calculating the change for milling spirals	15	39
Gears, Cutting bevel, with formed cutters	17	58
" Depth of cut for	17	52
" Laying off angles for bevel	17	33
" " out bevel	17	32
" Mesh in	17	1
" Molding-milling bevel	17	80
" Purpose of teeth of	17	2
" Rolling cylinders of	17	2
" Rule for finding velocity of	17	13
" Standard pitches for	17	51
" Templet-grinding process for	17	65
" Velocity ratio of	17	14
Geared shaper	9	16
Gearing, Clearance in	17	7
" Cycloidal system of	17	16
" " " "	17	24
" Involute system of	17	16
" Meaning of term back lash in	17	7
" Single, for cutting spirals	15	40
" Systems of	17	16
Generation system of gear-cutting	17	45
" system of gear-cutting	17	66
Gib jig for milling	15	17
Gould & Eberhardt gang gear-cutter	17	55
Graduating in a milling machine	16	37
Grant's cycloidal odontograph	17	25
" involute odontograph	17	20
" rule for rack teeth	17	23
Grinding chilled rolls	7	17
" gears, Templet process for	17	65
" machine for chilled rolls	7	17
" " " twist drills	12	10
" tools	12	8
" " for roll turning	7	5
Grooves, Helical with one side radial, Milling	15	47
" Helical with parallel sides, Milling	15	46
Grooved cam	16	5
" face cam	16	6

	Sec.	Page.
Grooved side cam	16	6
Grooving	13	2
" Clamping work for	14	23

H.	Sec.	Page.
Head, Adjustable index	14	43
" Non-adjustable index	14	40
Heads, Planer	8	1
Helical grooves with one side radial, Milling	15	47
" grooves with parallel sides, Milling	15	46
Helix and spiral, Definitions of	13	14
" Angle of	15	33
" Rule for finding angle of	15	34
Helixes and spirals, Cutting	15	45
Hobbed worm-wheels	17	37
Hobbing process of gear-cutting	17	49
" worm-wheels	17	81
Holding milling cutters	13	31
" tools, Devices for	10	35
Hole, Lead for drill	12	4
Holes, Causes of irregularity in drill	10	4
Horizontal drilling and boring machine	11	29
" drilling and boring machine table	11	34
" drilling and boring, Setting work for	11	34
Housings, Planer	8	1
Hubbing tool	12	25
Hypocycloid, Definition of	17	24

I.	Sec.	Page.
Index centers, Holding work with	14	34
" " Plain	14	31
" circle, Rule for selecting	15	24
" " Selecting the	15	23
" crank, Calculating turns of	15	22
" head, Adjustable	14	43
" " Non-adjustable	14	40
" " spindle and feed-screw, Connecting the	15	35
" " Stop pin for	15	22
" " Universal	14	36
" tables	15	26
Indexing, Compound	15	27
" Definition of	15	21
" Direct	15	21
" Effect of changing elevation of head on	15	25
Indexing, Indirect	15	21
" mechanism, Construction of	15	21
" Rule for	15	23
" " for calculating moves in compound	15	27
" Simple	15	21
" Simplifying moves in compound	15	29
" Use of sector in	15	25
Iron, Allowance for hot, in roll turning	7	16
" Planing chilled	7	20
Inserted-blade side mills	13	19
" tooth side mills	13	20
Involute, Definition of	17	17
" odontograph, Grant's	17	20
" rack teeth, Grant's rule for	17	23
" system of gearing	17	16
" teeth, Base circle for	17	17
" " Laying out	17	17
" " Single arc approximation of	17	19

J.	Sec.	Page.
Jack screws for use on drill press	10	44
Jacks or braces for high planer work	8	30
" Planer	8	25
Jaws, Special, for planer chucks	8	13
Jig, Construction of drilling	12	12
" for milling gibs	15	17
" " " machine	14	45
" Special milling machine	15	16
Jigs and fixtures for drilling	10	47
" for drilling flanges	12	12
" " irregular surfaces	12	14
" Holding work in, while milling	15	14
" Outside and inside drilling	12	14
" Special, for holding work on planer	8	29

K.	Sec.	Page.
Keyway cutters	9	43
Keyways, Cutting of, on shaper	9	21

L.	Sec.	Page.
Lathe for roll turning	7	9
" Prehistoric	10	2
Lathes for turning parallel rolls	7	1

	Sec.	Page.
Laying out bevel-gear blanks.	17	34
" " work for drilling..	12	1
Lead hole for drill.....	12	4
" of the milling machine...	15	39
Level, Use of, in planer work..	8	28
Lining milling-machine centers	14	38
Lipped drills.....	10	12
Lubricated cutter, Internal....	14	5
Lubricating drills.....	12	7
Lubrication by brush.....	14	2
" " gravity.....	14	3
" Materials requiring	14	1
" Methods of.....	14	2
" of drills.....	10	18
" " milling cutters.	14	1
Lubricants, Application of, to drills	10	19
" for milling.....	14	2
" Provisions for supplying, to drills.	10	19

M.	Sec.	Page.
Machine, Lead of the milling..	15	39
" reaming	12	5
" Setting the milling...	16	24
" tools, Heavy portable	11	21
Mesh as applied to gears.....	17	1
Mill, Cotter.	13	26
" Undercutting with an end.....	16	20
Mills, Adjusting straddle, for width	16	34
" Horizontal floor boring..	11	36
" Stem.....	13	25
Milling, Adjustment of feed in	16	24
" " " speed in	16	24
" Angular....	13	2
" " cuts..... ..	15	8
" arbor, Bushed expanding.....	15	10
" " Chuck	15	11
" " for shell mill....	13	34
" " " use between centers. ..	13	35
" " Screw.....	13	34
" arbors.....	13	31
" " Expanding.....	15	9
" " for index head use.....	15	8
" " Precautions to be taken with.	13	33
" " Supports for....	13	32
" attachment, Circular...	16	1
" " for cutting cams....	16	6
Milling attachment for planer.	16	8
" " Special....	16	1
" " Vertical...	16	3
" bevel gears, Molding..	17	80
" Cause of revolution marks in.....	16	22
" chuck work, Precautions in.	15	7
" circular chuck work...	15	7
" Construction of feed tables for.....	16	25
" cutter for T slots.....	13	22
" " Setting, central.	16	30
" " with interlocking teeth.....	13	27
" cutters, Angular.....	13	23
" " Arbors for holding.....	13	31
" " Care of.....	13	30
" " Classification of.....	13	10
" " Construction of.....	13	11
" " Diameter of....	14	8
" " Double-angle..	13	24
" " Driving.....	13	33
" " Effect of dullness on.....	13	30
" " Formed, Classification of...	13	26
" " Selection of....	14	6
" " Setting, for depth.....	16	26
" " Setting, sidewise..... ...	16	30
" " Single-angle...	13	23
" " Solid side.. ...	13	18
" " Straddle and gang.....	13	18
" Cutting speeds and feeds for.....	13	40
" Definition of.....	13	1
" Direction of feed in....	16	10
" Effect of vibration on..	13	35
" Face (or plain).....	13	1
" feeding into corners...	16	19
" Form	13	2
" " cutters for.....	13	29
" Grooving.....	13	2
" Holding cutters for....	13	31
" " round work for	14	32
" Influence of spring on.	16	12
" Limitations and errors in	14	10
" Lining work for.....	14	18

	Sec.	Page.
Milling machine, Boring in a..	16	36
" " bracing.....	16	23
" " centers, Lining.....	14	38
" " chuck, Holding work in	15	1
" " chucks and face plates.	13	37
" " collets	13	36
" " Construction of vertical.	14	20
" " dog.....	14	45
" " Double-headed.....	14	22
" " Drilling in a.	16	35
" " face plate, Lining.....	15	12
" " face plate, Use of.....	15	12
" machine face plate work, Examples of..	15	13
" machine, Graduating in a..... .	16	37
" " jig for splining...	15	14
" " " Holding work in	15	14
" " " Special...	15	16
" " Lead of the..	15	39
" " Setting the..	16	24
" " Special uses of.....	16	35
" " steady rest.	13	8
" " steady rest, Use of.....	15	18
" " Turning in a	16	36
" " Use of.....	14	12
" " " "	15	1
" " " "	16	1
" " Use of angle plates for plain.....	14	16
" " Vertical, Holding work on...	14	19
" " vise.....	13	8
" " " Purpose of.....	14	26
" " " Setting...	14	29
" " " Special...	14	34
" " " Swivel...	14	27
" " " Universal	14	28
" " work...	13	1
" machine work, Adjusting automatic feed for	16	35
" machine work done between centers.....	14	37
Milling machines, Advantages of.....	13	9
" " Classification of ...	13	2
" " Comparison of.....	16	49
" " Construction of universal.....	13	4
" " Essential parts of...	13	4
" " Plain.....	13	2
" " Special.....	13	4
" " Universal...	13	3
" " Vertical. ..	13	3
" Molding, process of gear-cutting.....	17	48
" operations, Classification of..	13	1
" " in boring mills....	11	40
" polygons..... ..	15	3
" Preparation of stock for	13	39
" process of gear-cutting, Molding.....	17	76
" Profiling.....	13	2
" Purpose of lubrication in.....	14	1
" Routing.....	13	2
" Rule for adjusting speed in.....	16	24
" Rule for application of cutter to work in....	16	12
" Running out the cut in	16	22
" Side.....	13	2
" Signs of excessive speed and feed in ...	16	26
" Slipping of work in....	16	14
" slots from solid metal.	16	16
" " in one operation..	16	17
" " " two operations	16	19
" " with end mills....	16	16
" Starting the cut in	16	21
" taper work between centers.....	14	39
" taper work by raising the tailstock.....	14	41
" taper work, Precautions to be observed in.....	14	44
" Testing the setting of work for.....	14	18
" work, Devices for holding	14	13
" " on face plate...	15	12
" " on non-adjustable index head	14	40

	Sec.	Page.
Milling work with adjustable index head....	14	43
" " with adjustable tailstock	14	43
" " " a hard surface.....	16	11
" " with taper attachment.....	14	43
Molding milling bevel gears...	17	80
" milling process of gear-cutting	17	48
" milling process of gear-cutting	17	76
" planing process of gear-cutting.....	17	66
" planing process of gear-cutting.....	17	47
" process of gear-cutting.....	17	66
Morse taper shanks, Table for.	12	30
Multiple drill spindles in one plane.....	11	14
" " with adjustable spindles.....	11	14
" spindle drill.....	11	13
" spindle vertical flange-drilling machine....	11	15

N.	Sec.	Page.
Natural functions, Definitions of.....	15	50
" " of angles..	15	50
" " Uses of tables of.	15	51
Number of teeth in gear, Rule for finding.....	17	9

O.	Sec.	Page.
Octoidal teeth for bevel gears.	17	73
Odontograph, Grant's cycloidal	17	25
" " involute.	17	20
Open-side plate planer.....	9	27
Outside and inside jig.....	12	14
" diameter of gear, Rule for finding.....	17	10

P.	Sec.	Page.
Packing block, Adjustable.....	14	25
Parallel strips, Use of.....	8	11
Parallels....	10	45
Pin and collar countersinking	10	28
" countersink	10	28
" Stop, for index head.....	15	22
Pipe taps, Table of drills for...	12	35
" " " " tap drill sizes for.	12	35
Pitch and proportions of teeth in gearing....	17	5
" circle....	17	4
" " Construction of, for bevel gears.....	17	36
" " Diameter of, Rule for finding	17	12
" " for bevel gears.....	17	30
" Circular.....	17	5
" " Rule for finding.	17	13
" cones for bevel gears....	17	32
" cylinders.....	17	4
" diameter.....	17	5
" " of worm-wheel, Rule for.... .	17	40
" " Rule for finding.....	17	10
" Diametral	17	5
" " Rule for finding	17	11
" point.....	17	4
Pitches, Standard for gears....	17	51
Plain milling.....	13	1
" " cutter.....	13	11
" surfacing in a planer....	8	33
Planer bolts, Shapes of	8	16
" centers.....	8	23
" centers, Rule for dividing work with..... ..	8	24
" chuck.....	8	7
" " Special jaws for.	8	13
" " Truing up.....	8	15
" clamps, Bent....	8	16
" Constant speed of.....	9	1
" Construction of rotary	14	14
" Cutting speed of.....	9	1
" Erection of a	9	4
" Error in plates of.....	9	4
" Errors in cross-rail of..	9	5
" feed motion....	8	33
" finishing tools, Special forms of.....	8	45
" head, Rule for swinging.....	8	41
" " Swinging.....	8	40
" " Testing squareness of.....	8	39
" heads.....	8	6
" jacks.....	8	25
" job, Special.....	9	8
" Limit of speed of.....	9	1
" Methods of driving.....	8	2
" milling attachment ..	16	8
" Names of parts of.....	8	1
" Open-side plate	9	27
" pins or plugs.....	8	18
" " " " Method of using....	8	19

	Sec.	Page.
Planer, shaper, and slotter work	8	1
" Spring of, machine	9	6
" Spur-gear	8	3
" table, Fastening work to	8	7
" Toe dogs for	8	20
" tool block	8	37
" " holders	8	42
" tools, Angles of rake and clearance for	8	35
" " Cutting principle of	8	35
" " for iron and steel	8	36
" " Keenness and strength of	8	36
" " Special gauges for setting	9	10
" " Spring of	8	43
" " Swing of	8	38
" " Various shapes of	8	41
" Variable speed of	9	2
" work, Accuracy of	9	4
" " Chipping the edge of	8	36
" " Clamping round	8	21
" " Depth of cut in	8	36
" " feeds for different metals	8	36
" " Roughing and finishing cuts on	8	36
" " Side or down cuts	8	37
" " Spring of, in clamping	9	6
" " U clamps for	8	17
" " Use of angle plates in	8	24
Planers, Quick-return	8	4
" Sizes of	8	6
" Spiral geared	8	5
Planing a number of pieces at once	8	29
" bevels	8	40
" chilled iron	7	20
" " " dies	7	23
" curved surfaces, Special rig for	9	9
" Molding, process of gear-cutting	17	47
" process for gears, Templet	17	64
" process of gear-cutting, Molding	17	66
" process of gear-cutting, Single-tooth molding	17	70
" sides parallel	8	10
Planing square	8	8
" T slots	8	47
" Templet, process of gear-cutting	17	47
" undercuts	8	46
" " Special tools for	8	48
" work too long for platen	9	8
" " too wide for housings	9	9
" " too wide for platen	9	8
Plate, Holding work on face, while milling	15	12
Platen, Error in planer	9	4
" Planer	8	1
Pneumatic drills	11	18
Portable boring devices	11	45
" drills	11	17
" " Classes of	11	18
Post drill	11	35

Q.	Sec.	Page.
Quick-return planers	8	4
" " shapers	9	19

R.	Sec.	Page.
Rack, Circular	17	72
" cutting	17	62
" " on the Shaper	9	24
" teeth, Grant's rule for	17	23
Radial drill, Feed for	11	8
" " Foot-plate and table for	11	9
" " Gear-driven	11	9
" " Setting work on	11	9
" " Simple	11	7
" " Universal	11	11
" " with outer column	11	9
Reamer, Adjustable, for different sized holes	10	26
" and countersink combined	10	30
" Expansion	10	26
" Taper, Roughing	10	23
Reamers, Adjustable	10	25
" Care of	10	24
" Depth of cut for	10	22
" Flat	10	20
" Fluted	10	20
" for brass	10	21
" having curved cutting faces	10	21
" having undercut faces	10	21
" Inserted-blade	10	24

	Sec.	Page.
Reamers, Number of cutting edges for	10	21
" Shell and rose	10	27
" Purpose of	10	20
" Simple adjustable	10	25
" Taper	10	22
" with rounded or tapered ends	10	22
Reaming	10	5
" Care necessary in	12	5
" Machine	12	5
" Methods of	12	4
Rest, Universal steady, for milling	15	20
" Use of the steady, in milling	15	18
Reversible milling cutters	13	12
Roll turning, Allowance for hot iron in	7	16
" " Clamping and holding the tool for	7	15
" " Cutting speeds for	7	8
" " Feed for	7	8
" " Holding the work	7	11
" " " tools for	7	7
" " lathe	7	9
" " tools	7	12
Rolls, Corrugating chilled	7	20
" Cutting off ends of chilled	7	8
" " " tools for chilled	7	6
" Grinding chilled	7	17
" " machine for chilled	7	17
" " tools for turning chilled	7	5
" Grooving tools for chilled	7	13
" Testing chilled	7	20
" Turning concentric grooves in	7	9
Rolling cones for bevel gears	17	29
" cylinders of gears	17	2
Root circle	17	7
" line	17	7
Rose reamers	10	27
Rotary planer, Clamping work on	14	15
" " Construction of	14	14
" " Lining work on	14	15
Round work, Holding of, while milling	14	32
" " Split vise chuck for holding	14	33
Routing	13	2

S.	Sec.	Page.
Saddles, Planer	8	1
Saw slitting	13	11
Screw slotting cutters	13	11
Screws, Jack, for use on drill press	10	44
Sector, Use of, in indexing	15	25
Sensitive drills	11	16
Setting the milling machine	16	24
Shaft, Stop, for gear-cutting engine	17	58
Shanks of drills	10	12
Shaper, Column	9	13
" Cutting speed of	9	19
" Fellows' gear	17	67
" Geared	9	16
" Quick return for	9	18
" Range and utility of	9	21
" Similarity to the planer	9	12
" slotter and planer work	8	1
" Special	9	30
" The crank	9	14
" The draw-cut	9	25
" tools	9	20
" Traveling head	9	17
" work, Cutting a keyway on	9	21
" " Cutting to a shoulder in	9	22
" " held to the saddle	9	23
" " Holding the	9	20
" " Rack cutting the	9	24
" " Spring of	9	25
" " Taking cut on	9	21
Shell and rose reamers	10	27
Side cam	16	5
" milling	13	2
" " cutters	13	18
" mills, Inserted-blade	13	19
" " Inserted-tooth	13	20
Sine, Meaning of	15	50
" Versed, Meaning of	15	50
Single-tooth molding-planing process of gear-cutting	17	70
Slitting saw	13	11
Slot and teat drills	10	15
Slots, Cutting T, on a planer	8	47
Slotter bars with tool blocks	9	39
" Gear-cutting on	9	41
" ram, Setting the	9	34
" shaper, and planer work	8	1
" tools, Shapes of	9	37

	Sec.	Page.
Slotter work, Clamping, to the platen	9	35
" " Examples of	9	40
" " Holding the	9	35
" " Setting	9	35
Slotting circular surfaces	9	36
" cutters	13	22
" " Screw	13	11
" machine, Work of	9	32
" machines, Cutter bars for	9	38
" Taking two cuts at once in	9	41
" with end mills	16	16
Speed, Adjustment of, in milling	16	24
Speeds and feeds of drills, Tables of	12	32
Spherical surfaces, Fixture for boring	11	44
" " Fixture for turning	12	27
Spiral, Definition of	13	14
" geared planers	8	5
" Generation of	15	32
" work, Relation between cutter and profile of cut in	15	45
Spirals, Calculating change gears for cutting	15	39
" Compound, Gearing for cutting	15	41
" Definitions of	15	33
" Single, Gearing for cutting	15	40
Splining jig	15	14
Spot facing	10	5
" " Definition of	10	33
" " Forms of cutters for	10	33
" " lower side of flange	10	34
Spring, Influence of (milling)	16	12
" of planing machine	9	6
" " shaper ram	9	25
Spur-gear calculations, Rules for	17	9
" planer	8	3
Square planing	8	8
Standard cutters for gear-cutting	17	49
Steady rest for milling-machine work	15	18
" " for supporting work sidewise	15	19
" " Limitations of ordinary	15	20
Steady rest milling machine	13	8
" " Universal	15	20
Stem mills	13	25
Stock, Preparation of, for milling	13	39
Stop-pin for index head	15	22
Straddle and gang mills	13	18
" mills, Adjusting, for width	16	34
Straight-fluted drills	10	14
Surface gauge, Use of	8	11
Swasey gear-cutter	17	77
Swivel vise	14	27
System of gear-cutting, Generation	17	66

T.	Sec.	Page.
Table for boring machine	11	26
" " drilling machine	11	5
" " horizontal drilling and boring machine	11	34
" of cutting speeds and feeds for milling	13	49
" " drills for pipe taps	12	35
" " Morse taper shanks	12	30
" " speed and feed of drills	12	32
" " tap drill sizes	12	34
" showing offset of double-angle cutters	15	49
" Universal, for drilling	11	11
Tables, Index	15	26
Tailstock for milling machine	14	43
Tangent, Meaning of	15	50
Tap drills, Table of	12	34
Taps	10	34
" Pipe, Table of drills for	12	35
Taper attachment for milling machine	14	43
" reamer, Heavy duty of	10	23
" reamers	10	22
" roughing reamer	10	23
" work between centers, Milling	14	39
" " Lining the centers for	14	46
" " Setting	14	47
Tappets, Planer	8	3
Tapping	10	6
" chucks, Automatic reversing	10	42
" Correct size of drill hole for	12	6
" devices, Safety drilling	10	41
" Forms of taps used in	12	5

	Sec.	Page.
Tapping, Speed of spindle in...	12	6
Teeth, Convergence of, in bevel gears	17	31
" Grant's rule for involute rack	17	23
" Importance of forms of gear	17	3
" Laying out cycloidal....	17	24
" " " gear.....	17	16
" " " involute.....	17	17
" Octoidal, for bevel gears	17	73
" of gears, Purpose of.....	17	2
" " spur gears.....	17	1
" Pitch and proportions of	17	5
" Proportions of gear.....	17	7
" Rule for finding number of	17	13
" Rule for finding number of, in gear	17	11
" Rule for number of, in worm-wheel	17	39
" Single-arc approximation of involute	17	19
Templet-grinding process for gears	17	65
" planing process of gear-cutting	17	64
Testing chilled rolls	7	20
Toe dogs	8	20
Tool holders for planers	8	42
" Hubbing	12	25
Tools for chilled rolls, Cutting off	7	6
" " grooving chilled rolls	7	13
" " roll turning, Grinding of	7	5
" " turning chilled rolls.	7	12
" Heavy portable machine	11	21
" Shaper	9	20
" Slotter	9	37
" Special gauges for setting planer	9	10
" Spring, for planer	8	43
" Various shapes of planer	8	41
Tooth caliper, Gear-	17	61
" curves for bevel gears, Laying out	17	35
" depth gauge, Gear-	17	53
" method of gear-cutting, Conjugate	17	47
" method of gear-cutting, Conjugate	17	66
Traveling-head boring bar	11	32
Traveling-head shaper	9	17
Trepanning drill	12	24
Trunnion supports for work...	12	23
Turning and boring operations	11	27
" in a milling machine.	16	36
" rolls for concentric grooves	7	9
" spherical surface.....	12	27
" tools for parallel rolls.	7	4
Twist-drill grinding machine..	12	10
" drills	10	13
" " Commercial	10	13
" " Form of clearance face	12	11
" " Machine grinding for	12	10
" " Precautions in grinding	10	14
Twisted flat drills	10	13

U.	Sec.	Page.
Undercutting of end mill	16	20
Universal steady rest	15	20
" table for drilling machine	11	11
" vise for milling machine	14	28

V.	Sec.	Page.
V blocks for holding cylindrical pieces	10	45
Velocity of gears, Rule for finding	17	13
" ratio of gears	17	14
Versed sine, Meaning of	15	50
Vertical boring-mill tables, Extension arms for	12	25
" cylinder boring machine	11	43
" milling attachment...	16	3
" milling machine, Construction of	14	20
" milling machine, Holding the work on	14	19
" milling machine, Lining work on	14	21
Vibration, Effect of, in milling	13	35
Vise for drilling machine	10	46
" Holding work in, while milling	14	26
" jaws, False	14	29
" Milling-machine	13	8
" Purpose of, for milling...	14	27
" Setting of milling-machine	14	29
" Universal, for drill press.	10	46
" " " milling	14	28

W.	Sec.	Page.
Wheels, Gashing worm	17	81
" Hobbing worm	17	81
" " Making	17	80
Work, Care in setting	8	28
" Clamping, by gluing	8	26
" " for grooving	14	23
" " round, on planer	8	21
" Devices for holding, on milling table	14	13
" done between centers, Milling	14	37
" Double face plate for supporting	12	22
" Examples of clamping heavy	8	31
" " " face-plate milling	15	13
" " " slotter	9	40
" Fastening, to planer table	8	7
" Fixtures for supporting and rotating	12	19
" Grooving, while held in chuck	15	2
" Heavy centers for	12	21
" Holding, in jigs while milling	15	14
" " in vertical milling machine	14	19
" " on shaper	9	20
" " on slotting machine	9	35
" " with index centers	14	31
" Influence of spring on, while milling	16	12
" Lining of, in milling	14	18
" Milling of, having hard surfaces	16	11
" " taper between centers of	14	39
" Necessity of clamping, rigidly	10	47
Work of the slotting machine	9	32
" " " shaper	9	12
" Proper direction of rotation of	15	49
" Packing under the	8	27
" Resetting	8	28
" Roller support for	12	20
" Setting, in radial drill	11	9
" Special jacks or braces for high planer	8	30
" " jig for holding	8	29
" Spring of, by its weight	9	6
" " " in clamping	8	27
" " " " "	9	6
" Springing of, by internal stresses	9	7
" Supporting, sidewise when milling	15	19
" Taking the cut on	8	33
" Testing the setting of milling	14	18
" To keep, from slipping	8	26
" too long for planer table	9	8
" " wide for planer housings	9	9
" Trunnion supports for	12	23
" Use of level on	8	28
Working chilled iron	7	1
Worm, Designing of	17	41
" Rules for	17	42
" wheel, Rule for determining pitch diameter of	17	40
" " Throat diameter of	17	40
" wheels and worms	17	37
" " Designing	17	39
" " Formed cutter for	17	80
" " Gashing	17	81
" " Hobbing	17	81
" " Making	17	80
" " Rules for	17	39

THE NEW YORK PUBLIC LIBRARY
REFERENCE DEPARTMENT

This book is under no circumstances to be taken from the Building

DEC 1[illegible] 1917	[illegible]	
[illegible]		
[illegible]	[illegible]	
	7-3-18	
[illegible]		
	DEC 15 1928	
[illegible]		
	DEC 14 1918	
	4/23/24	
APR 22 1918		

Form 410